Rotary encoder PSENenco

The rotary encoders PSENenco are used to determine position and speed. The rotary encoder is an absolute encoder that is used in the automation system PSS 4000. It supplies diverse, absolute position values, which are verified in the software block. The rotary encoder has a magnetic and an optical measuring system and thus combines two units in one.

Part of PSS 4000



PSEN enc m1 eCAM



PSEN enc m2 eCAM

Standard rotary encoder, but safe

The rotary encoder PSENenco is a standard encoder – but through the combination of the control system PSSuniversal PLC, the rotary encoder and software blocks, the system reaches SIL CL 3 and PL e.

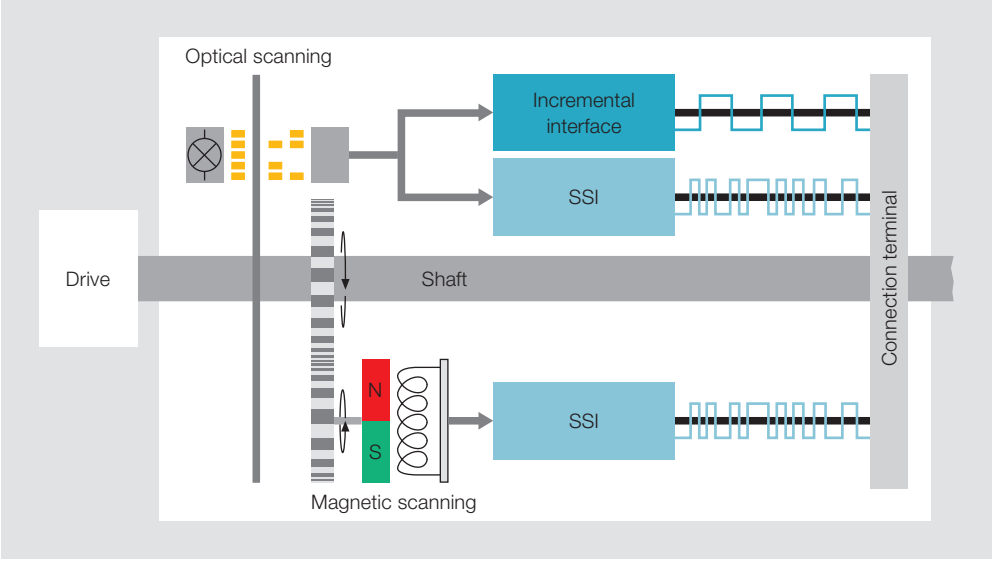

Redundant, dual-channel rotary encoder.

Type code for PSENenco

PSEN enc m1 eCAM

Product area Pilz **SEN**sors	Rotary encoder feature	Series	Design
Product group **enc – PSENenco**	**m** Multi-turn s Single-turn	**1** Hollow shaft 2 Solid shaft	**eCAM** Electronic rotary cam arrangement
Operation Magnetic and optical			

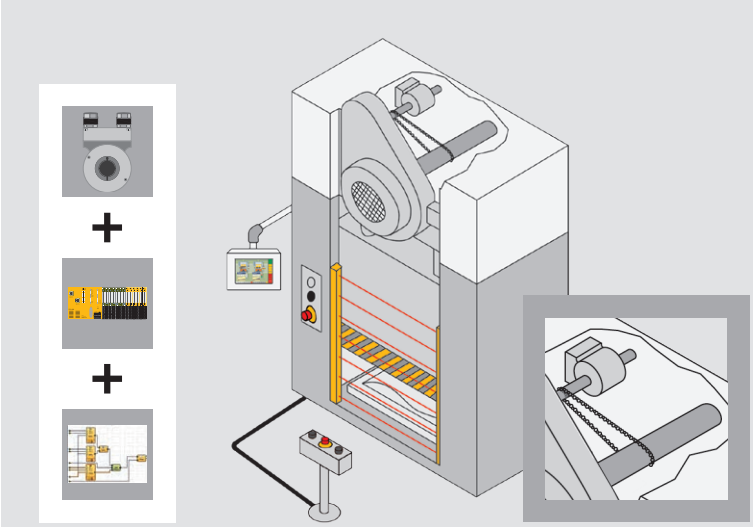

Your benefits at a glance

- Safe evaluation of speed and position
- The safe monitoring function is transferred to the user software
- High flexibility when monitoring limit values due to dynamic limit value monitoring in the user program
- Mechanical rotary cam arrangement is replaced by the safe electronic rotary cam arrangement PSS 4000 incl. PSENenco

Components for your safe solution	Order number
Sensor: PSEN enc m1 eCAM	544021
Connection: Signal cable, min. 0.25 mm², shielded, stranded pair	-
Evaluation device: PSSu PLC1 FS SN SD	312070

The optimum solution: rotary encoder, control system and software = safe electronic rotary cam arrangement.

Application of PSENenco

The rotary encoder PSENenco is used in the mechanical press sector, for instance. The Pilz “safe electronic rotary cam arrangement” solution completely replaces conventional mechanical rotary cam arrangements. Further application areas can be found anywhere that safe position detection is required.

Selection guide – rotary encoder PSENenco



PSEN enc m1 eCAM

Type	Function	Rotary encoder feature	Order number
PSEN enc m1 eCAM	Absolute encoder	Multi-turn, hollow shaft	544021
PSEN enc m2 eCAM	Absolute encoder	Multi-turn, solid shaft	544022
PSEN enc s1 eCAM	Absolute encoder	Single-turn, hollow shaft	544011
PSEN enc s2 eCAM	Absolute encoder	Single-turn, solid shaft	544012

Common features

- 2 encoders in one housing
- Diverse, 2-channel (1 x optical, 1 x magnetic)
- 2 SSI interfaces
- SIL CL 3 and PL e in the automation system PSS 4000

Keep up-to-date on rotary encoders PSENenco:

Webcode: web150403

Online information at www.pilz.com