# XXL
# Standard clamping solutions

SCHUNK XXL modular system for clamping technology

Hand in hand for tomorrow

**Standard clamping solutions**
SCHUNK XXL modular system for clamping technology

# XXL

NEW

# The SCHUNK XXL modular system for any large-sized machine

**Maximum productivity increase made easy: combining standard clamping device components for large machines. Modern devices are versatile and can be flexibly adapted to individual processing requirements. They should not be seen as single-use solutions, but rather the key to success lies in the synthesis of different technologies and their advantages. The SCHUNK XXL modular system for clamping technology provides the essential basis for this synergy.**

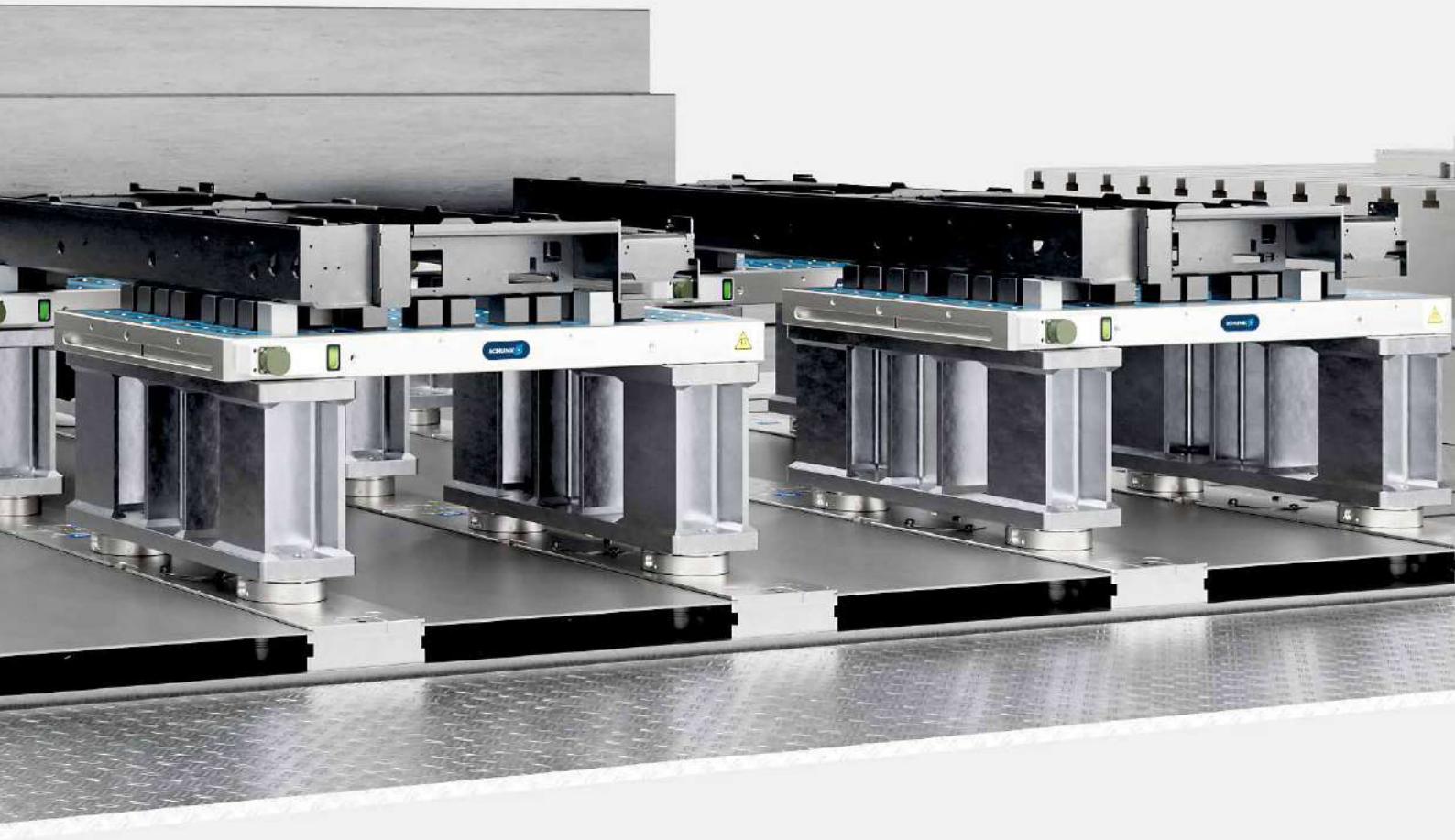

# This XXL modular system is a 'must-have' for any large-sized machine

## What does XXL modular system for clamping technology mean for SCHUNK?

This modular system is essential and has been designed for large machines: Boring mills, traveling columns and gantry milling machines as well as large machining centers. The major advantage here is that it can be expanded in line with constantly changing market requirements.

## What is the challenge for SCHUNK, but also for customers?

To design standard components that have been tried and tested thousands of times and combine them in a modular system so that a modular clamping technology system is available that can be used flexibly and easily for large machines (XXL) and can be expanded and replaced at any time. Market feedback from our customers, who are driven by ever smaller batch sizes and greater part diversity (down to a quantity of one), means that the classic device has to change. It has to be super-flexible, easy to handle, reproducible, and at the same time able to be used in such a way that machine idle times can be shifted in front of the machine. Keyword: set-up parallel to production time, for example via a crane pallet.

## How can the XXL modular system help to reduce idle times and significantly increase spindle running times?

By the tried-and-tested VERO-S quick-change pallet system, which was designed as a standardized strip solution. These strips are modularly expandable and can be used as the basis for both existing and new machines. Habitually self-locking (via spring assemblies) and pneumatically opening, fast and precise installation and removal of clamping devices such as console risers, plates/T-slot tables, XXL vises, magnetic chucks, fixtures and clamping angles is possible. An absolute "must-have" in today's world to ensure competitiveness.

Another important component of this XXL modular systems are the MAGNOS double magnets. These are particularly suitable for customers who want to use the machine table without any restrictions. The double magnets have two independent magnetic clamping areas: one facing the machine table and the other facing the workpiece. Using roller lifting bars, the double magnets can be moved ergonomically and clamped easily, flexibly and freely in any position without the need for a crane. They are ideal for components such as welded assemblies or large cast components.

## How do you see the future development of clamping technology for large-sized machines?

Cost pressure, international competition, the omnipresent shortage of skilled workers and faster delivery times demanded by customers with ever higher quality standards require a rethink in order to remain competitive in the future. The focus is based on modularity using standard components, reliable and reproducible processes, high quality combined with maximum flexibility and outstanding ergonomics. The aim is to relieve the burden on existing skilled workers and at the same time be less dependent on specialists.

**Tim Janke**
*Product Specialist*

With more than 25 years of expertise in international technical sales, Mr. Janke is a highly successful expert in clamping solutions in various fields of mechanical engineering. The focus is always on the technical solution, but this has to be simple and practicable, according to the motto "from practice for practice"

More than
50%
increased in spindle running times
Up to
60%
less idle time

# Added value of the XXL modular system: Productivity and quality

**The XXL modular system for clamping technology significantly increases effective machine running times. Non-productive and set-up times are reduced to a minimum.**

## Advantages – your benefits

- **Clamp workpieces faster and easier**
  Precise, repetitive, compensating, even at the press of a button with the magnet
- **Relocate clamping devices quickly and precisely**
  Fast, ergonomic and precise with VERO-S
- **Shorter machining time**
  Machining time can be significantly reduced (more stable clamping)
- **Reduction in idle time**
  Non-productive time can be reduced by up to 1/3
- **Consistent handling processes**
  Loading and unloading remain the same
- **Consistent workpiece alignment**
  The alignment of the workpieces remains largely the same

## Classic clamping method vs. XXL modular system

The XXL modular system for clamping technology offers invaluable added value. It enables the clamping devices to be set up and dismantled quickly, which significantly reduces idle times. Its ergonomic, modular and flexible components eliminate the need for specific fixtures, increase spindle running times and significantly boost productivity.

# Customized flexibility: The XXL clamping technology system for modular solutions

**Proven standard components in a modular system enable the creation of a flexible and convenient modular system for clamping technology for large machines (XXL). This modular system is not only expandable and interchangeable at any time, but also optimally adapted to the needs of modern production.**

### Crane plate with integrated centering

The crane pallet enables fast and ergonomic set-up in front of the machine, parallel to the main time. The rear centering and the VERO-S pins enable a single operator to carry out the changeover within a few minutes.

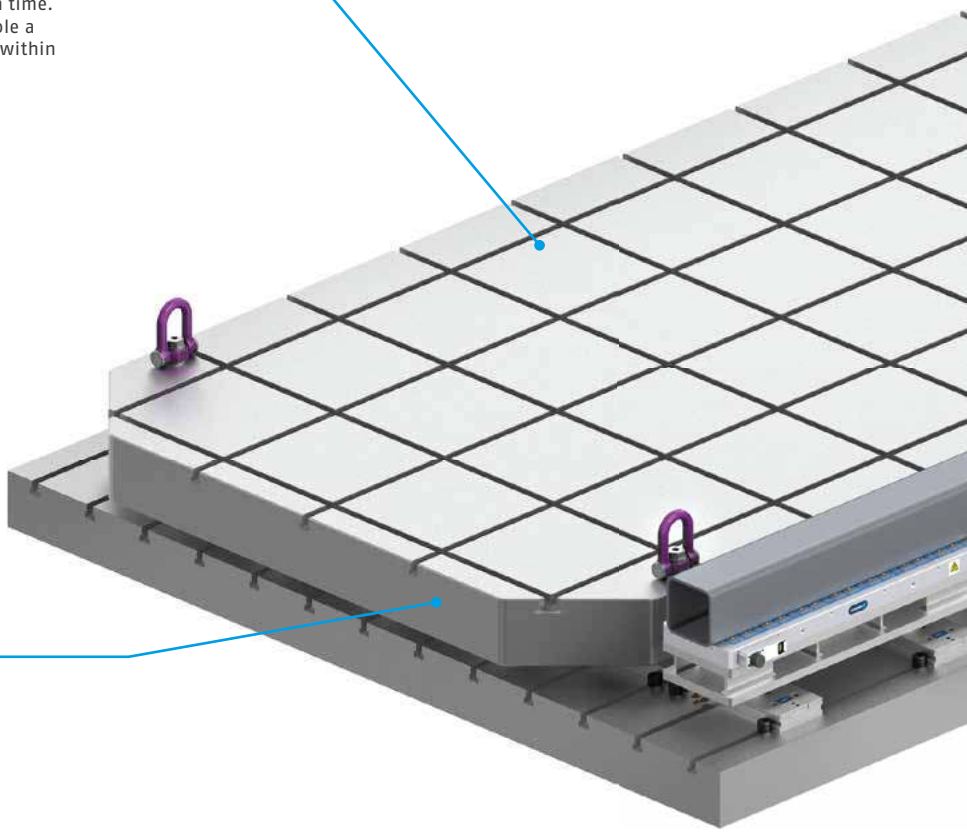

### Pre-centering pins

Large pre-centering pins on the clamping stations, together with the pre-centering rings in the clamping pallets, enable large clamping pallets to be loaded and unloaded quickly and safely with a crane without damaging the quick-change pallet system.

## Double magnets

Double magnets can be easily and ergonomically positioned on the machine table and magnetically clamped. The clamping range to the workpiece is then activated.

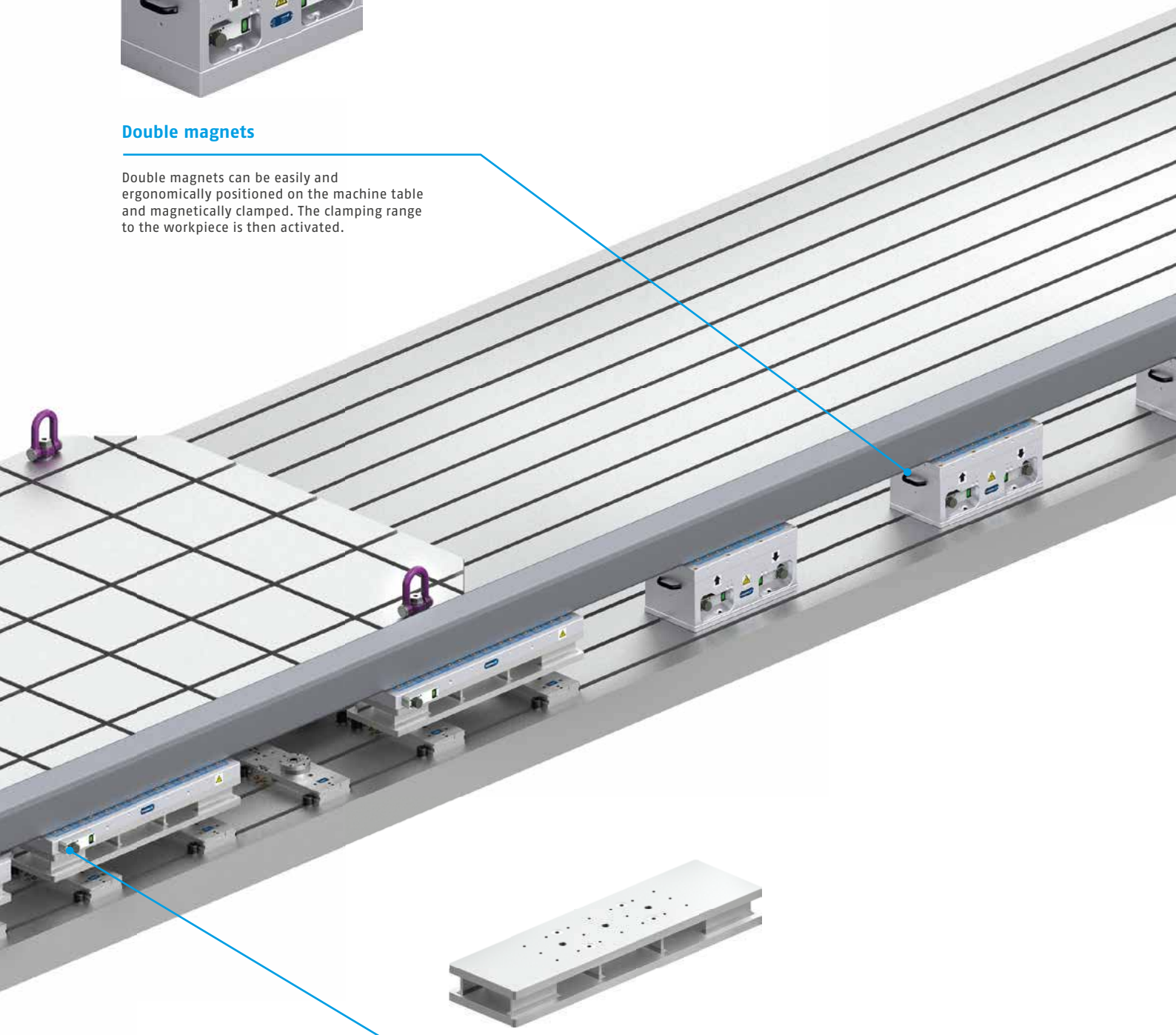



## Consoles

Consoles under the magnetic chucks.
With VERO-S clamping pins on the back,
they can be exchanged quickly and flexibly.

# Efficient flexibility: Two ways to retrofit with the SCHUNK XXL modular system

**The SCHUNK XXL modular system for clamping technology has been specifically designed for two different customer groups to ensure maximum flexibility and adaptability. Efficient options with crane pallets are available for the first target group, who prefer changeovers in front of the machine. For the second target group, who want to use the machine table flexibly, we offer special solutions with double magnets.**

## Customer group 1

### Parallel set-up in main time with crane pallet and VERO-S strips

The modular VERO-S strips, a proven, extremely robust and self-locking quick-change pallet technology, form the basis (a 6-bar pneumatic system/air purge is only required for opening). Mechanical fastening is simple and easy to implement on both existing and new machines.

The VERO-S strips can be flexibly combined in terms of table width and individually positioned on the machine table length. In addition, the fixed zero-point pitches enable crane pallets to be inserted (reducing idle times and pre-setting in front of the machine) and clamping devices to be positioned or moved quickly, easily and precisely on the machine.

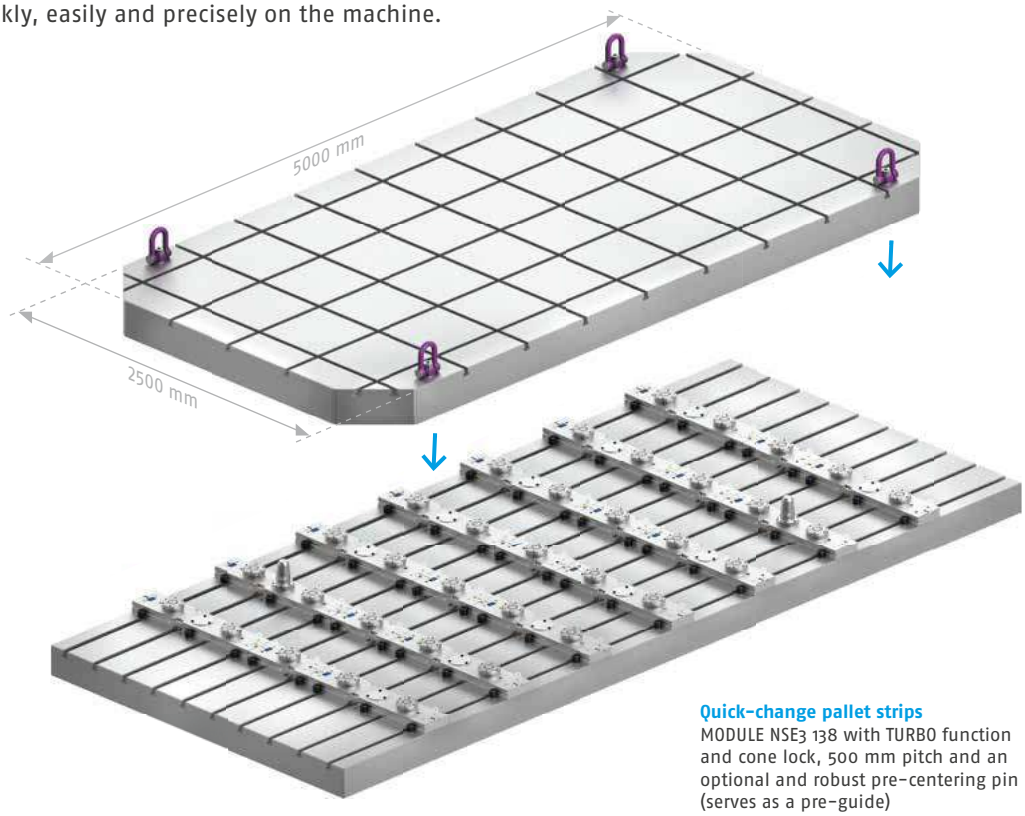


**Crane pallets**
for external pre-setting outside the machine

**Quick-change pallet strips**
MODULE NSE3 138 with TURBO function and cone lock, 500 mm pitch and an optional and robust pre-centering pin (serves as a pre-guide)

# Customer group 2

## Flexible positioning on the machine table with double magnets

The double-magnet system simplifies set-up of large workpieces considerably and thereby facilitates or accelerates your daily work routine. Thanks to the ergonomic alignment, even heavy clamping devices can be moved effortlessly without the use of cranes. The intuitive handling allows for fast activation and set-up, independent from machine type or table.

**MAGNOS double magnets**
Two independent magnets on the top and bottom allow easy positioning on the machine table

# Unlimited possibilities: The SCHUNK XXL modular system

**Discover the world of SCHUNK XXL clamping devices, in which every component is a key to the implementation of individual clamping solutions. This modular system not only offers basic elements, but also enables comprehensive, sophisticated clamping solutions through hybrid use.**

## Parallel set-up of the XXL workpiece

### Clamping devices

Various clamping devices are available to flexibly clamp and position components.

KSC3 125-740

MFRS-2-A2-050 200x190
MFRS-4-A2-050 200x190

Universal T-slot table top

### Consoles

For installation and removal using zero-point clamping pins. The height extensions serve as the basis for clamping devices and slotted plate fields. They enable better accessibility with orthogonal angles and fork milling heads.

VERO-S consoles

### Crane pallet

For installing and replacing consoles. Individually adapted in terms of dimensions, quantity and design type for external pre-setting outside the machine (palletizing).

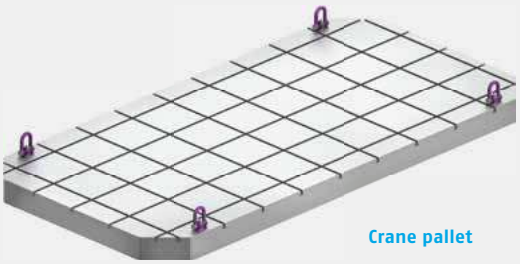

Crane pallet

### The basis

VERO-S strips with modular quick-change pallet technology serve as a quick-change system for precise and repeatable positioning.

VERO-S strip
500-1

VERO-S strip
1000-2

VERO-S strip
1000-2-Z

## Ferromagnetic machine table

## Free positioning of the XXL workpiece

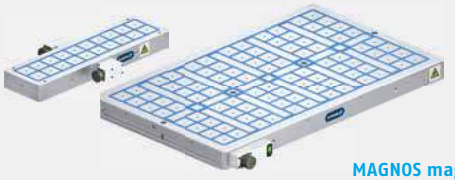

MAGNOS magnetic chucks

VERO-S strip
1000-3

Double magnet

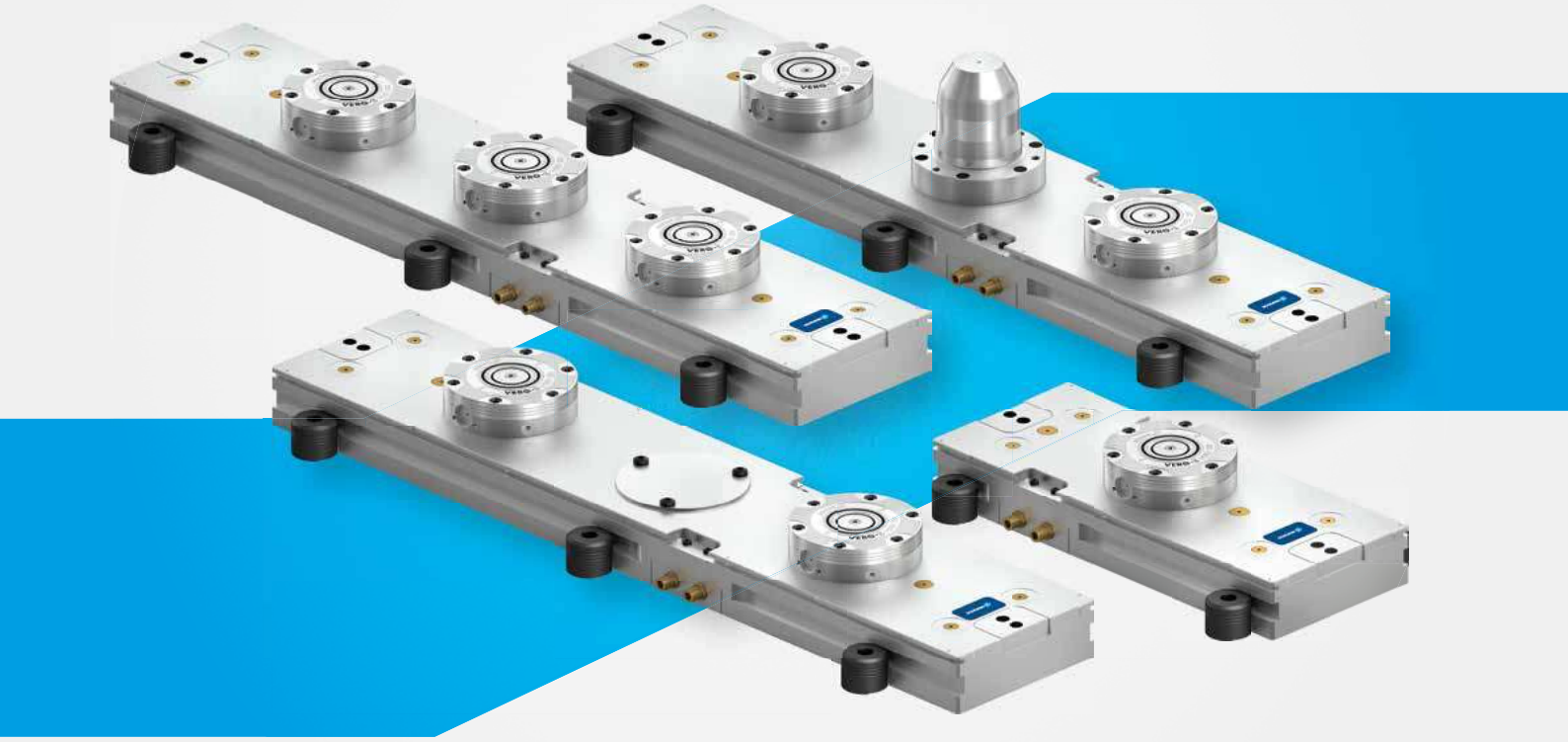

# VERO-S strips Individual set-up for any production process

VERO-S strips as a standardized modular quick-change system, suitable and yet individually combinable for every machine table.

# VERO-S strips for flexibility and efficiency

By using just three different sizes of VERO-S strips, a wide range of adaptations can be implemented thanks to the sophisticated modular system and the corresponding connecting elements.

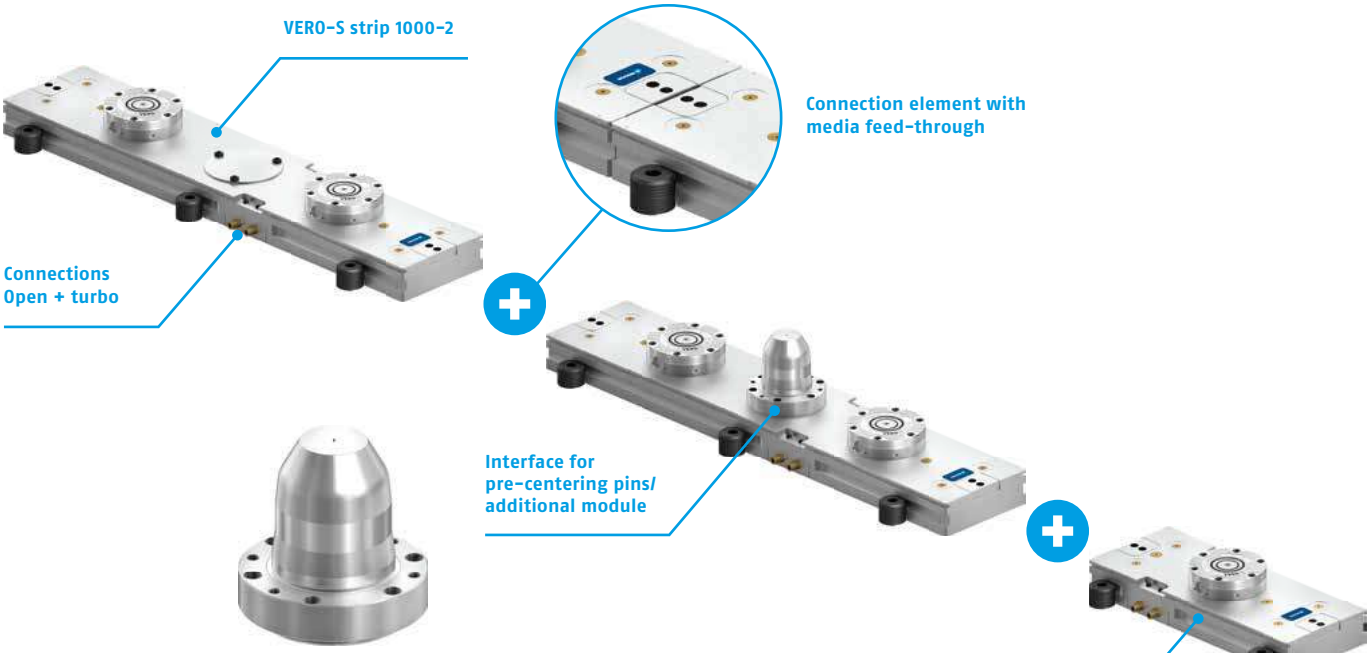


**Pre-centering pins**
Enable easy loading and unloading of large crane pallets or devices.

## Advantages – your benefits

- For each machine table (gantry or traveling column machine) freely combinable in modular form, three different sizes of clamping strips are available
- Enhanced flexibility and modularity in the use of the clamping devices thanks to the standardized pitches of the quick-change pallet pins
- No machine-side modification necessary
- The self-locking quick-change pallet modules are pressurized with 6 bar air purge via a central pneumatic quick-release coupling for opening

# Individual strip layouts for any field of application

**All VERO-S strips are designed with lateral media transfer unit, cone seal, piping at rear, and longitudinal clamping and fastening grooves. Actuation can optionally take place on the front or long side (open/turbo).**

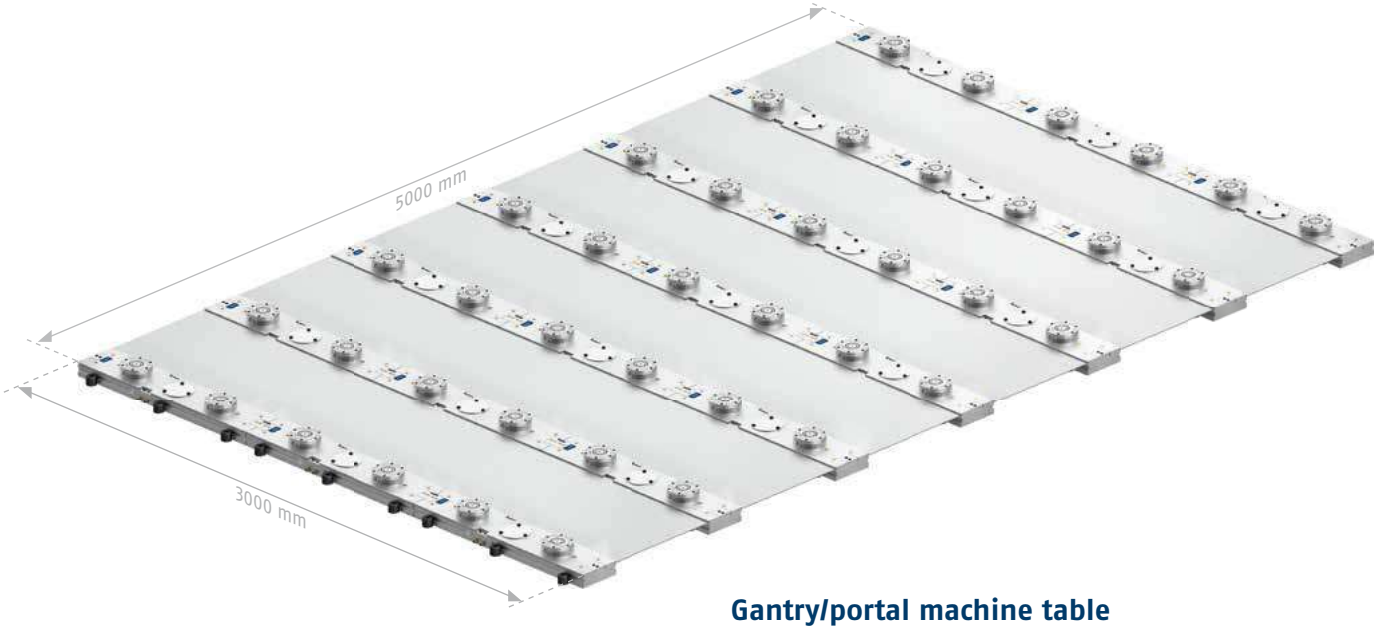


## Gantry/portal machine table

Example of table layout from the standard types of VERO-S strips with (optional) sheet metal cover/sheet metal (accessible) between the zero point strips.

## VERO-S strip 500-1

| Technical data | |
|---|---|
| **ID** | 1533459 |
| **Dimensions** [mm] L x W x H | 499 x 200 x 105 |
| **Number of modules** | 1 |
| **Pre-centering pin** | No |

## VERO-S strip 1000-2

| Technical data | |
|---|---|
| **ID** | 1533414 |
| **Dimensions** [mm] L x W x H | 999 x 200 x 105 |
| **Number of modules** | 2 |
| **Pre-centering pin** | No (adjustable) |

## Bore mill/rotary table

Example illustration of table configuration from the standard types of the VERO-S strips with (optional) sheet metal covering/sheet metals (can be walked on) between zero point strips, suitable for all table lengths. The pitch between the strips can be customized.

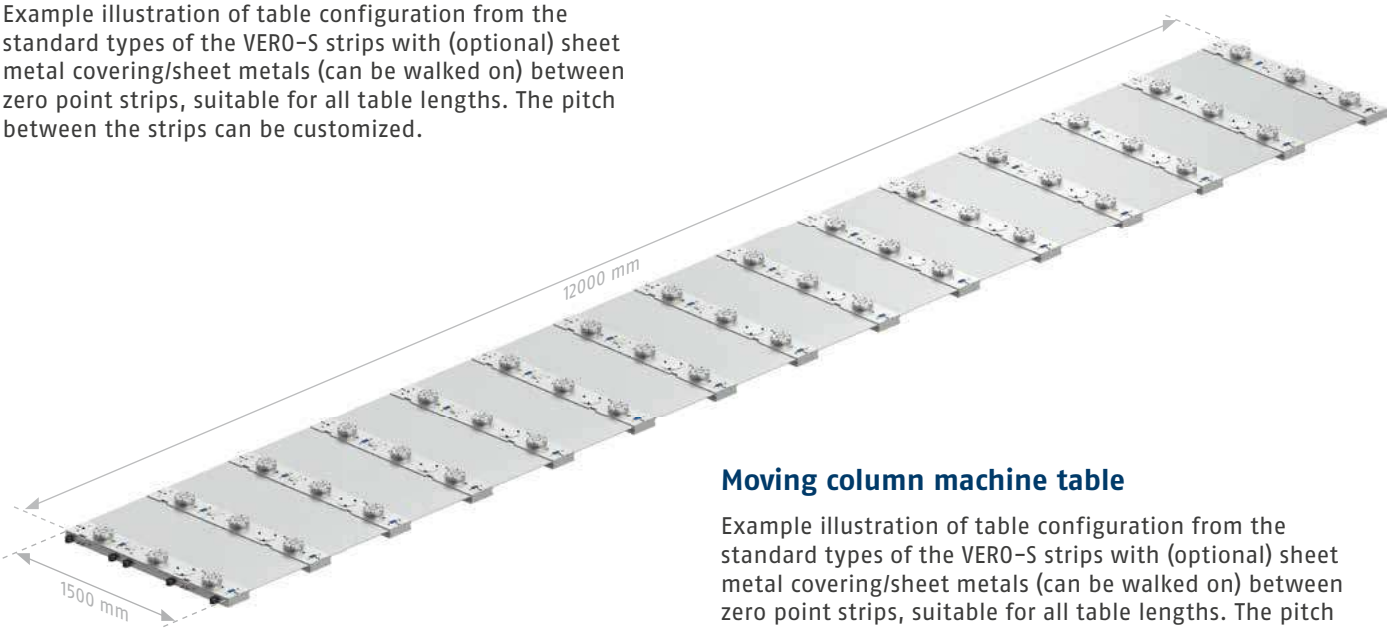


## Moving column machine table

Example illustration of table configuration from the standard types of the VERO-S strips with (optional) sheet metal covering/sheet metals (can be walked on) between zero point strips, suitable for all table lengths. The pitch between the strips can be customized.

## VERO-S strip 1000-2-Z

| Technical data | |
|---|---|
| **ID** | 1533453 |
| **Dimensions** [mm] L x W x H | 999 x 200 x 105 |
| **Number of modules** | 2 |
| **Pre-centering pin** | Yes |

## VERO-S strip 1000-3

| Technical data | |
|---|---|
| **ID** | 1533455 |
| **Dimensions** [mm] L x W x H | 999 x 200 x 105 |
| **Number of modules** | 3 |
| **Pre-centering pin** | No |

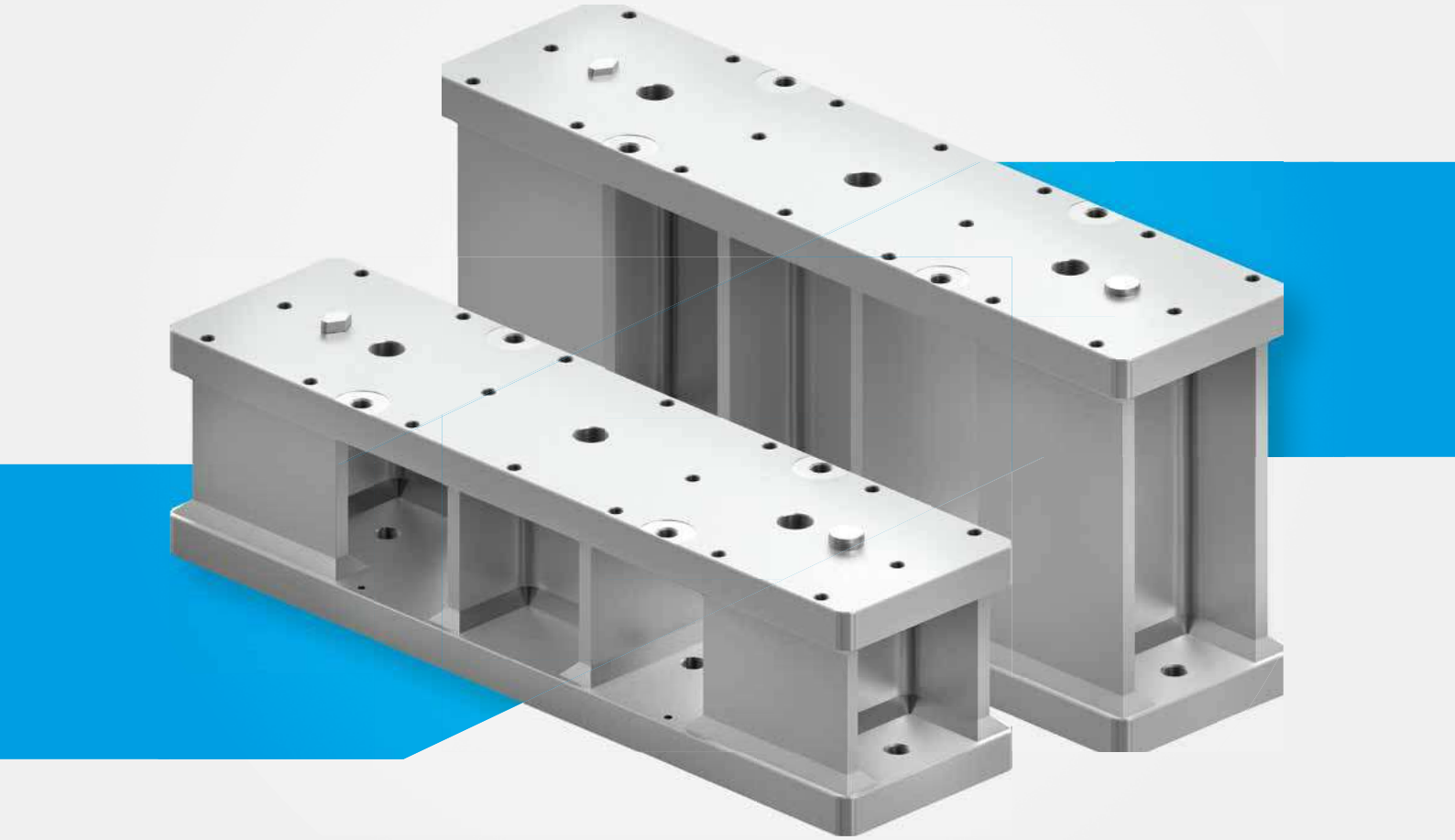

# VERO-S consoles
# Combinable. Versatile. High.

These consoles can be used in conjunction with appropriate milling heads to improve accessibility to the workpiece. The consoles have a VERO-S interface on the underside and a corresponding flexible hole pattern for the clamping device on the top.

# Modular system
# Wide range of combination options

The clamping devices can be flexibly positioned on the VERO-S strips according to the machining task to ensure optimum set-up.

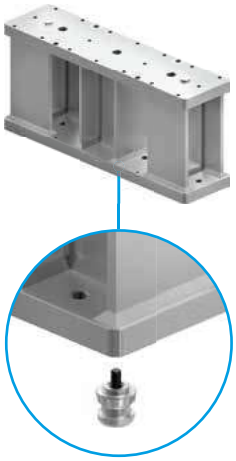

**Console without structure with VERO-S clamping pins on the back**
Quick, easy positioning and clamping using VERO-S modules

**Consoles with MAGNOS MFRS standard magnetic chucks**

The consoles can be attached to standard magnetic chucks at any time. This makes it possible to use different types of magnetic chucks in combination.

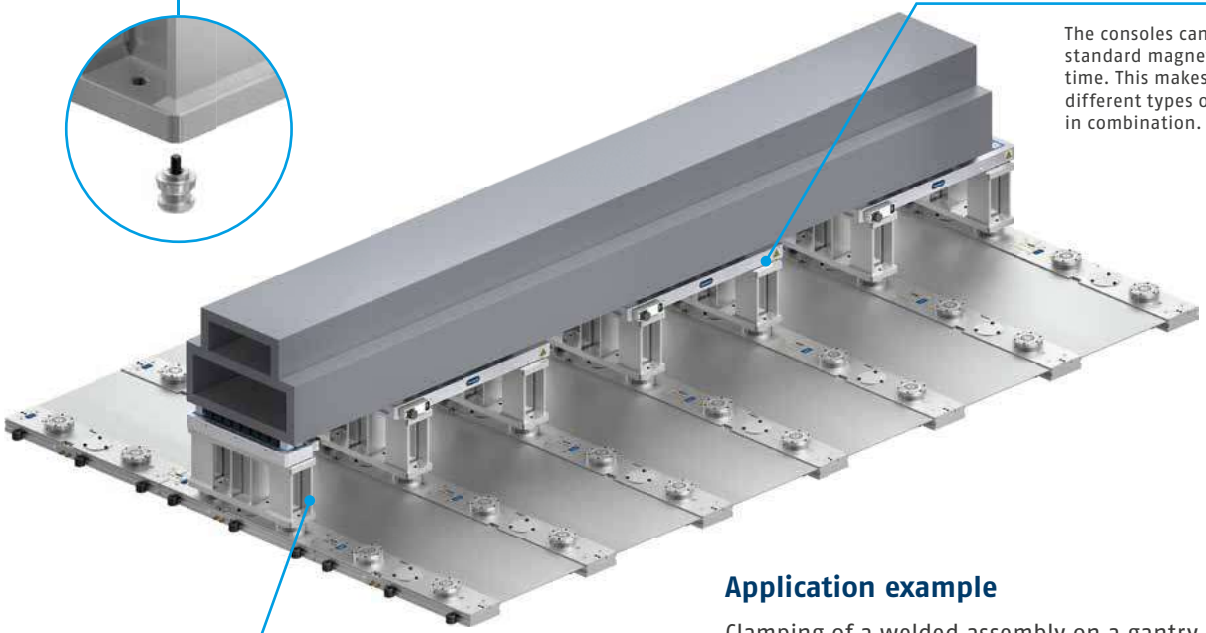

**Console with MAGNOS MFRS**

With MAGNOS special magnet incl. top tooling

## Application example

Clamping of a welded assembly on a gantry milling machine with VERO-S strips, console risers and MFRS magnetic chucks (Eperm). Compensating voltage, 3-point support (FIX) and mobile/flexible pole extensions.

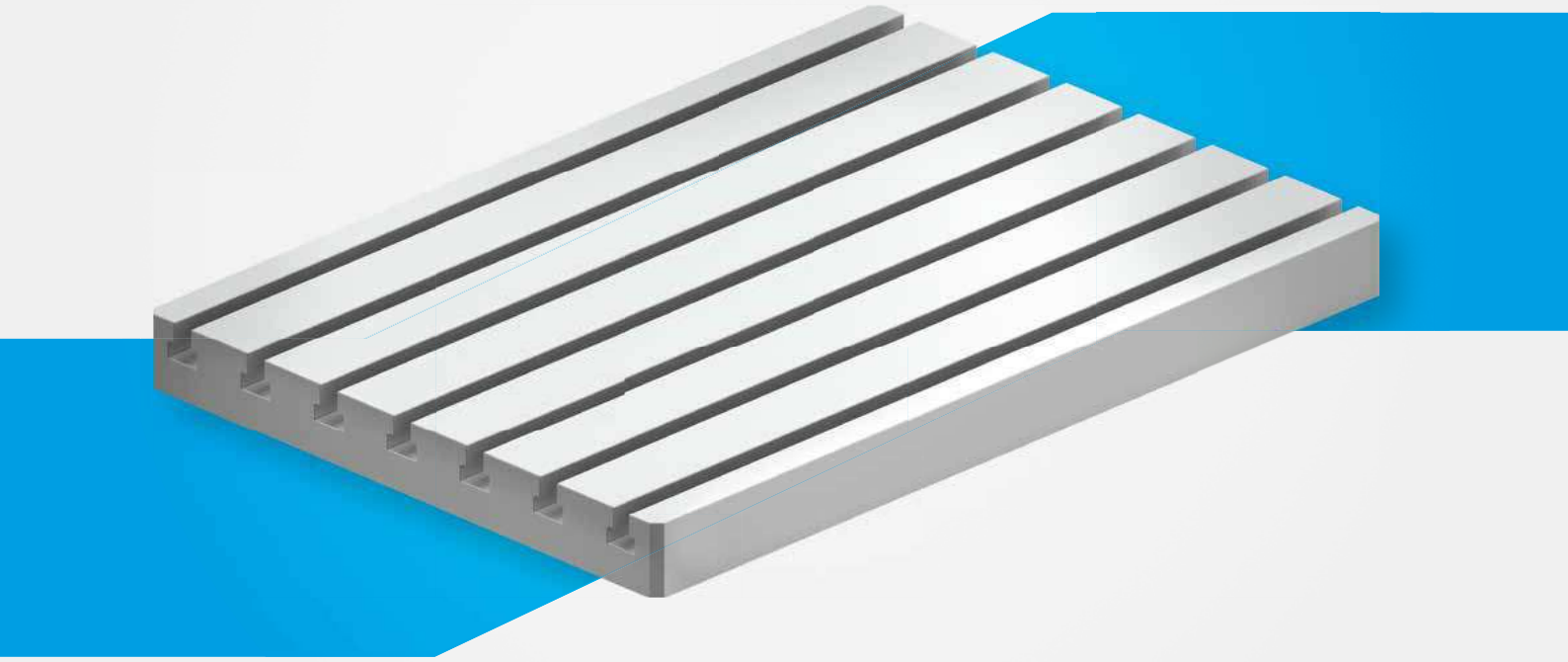

# Universal T-slot table Simple and flexible

The universal T-slot table combines the traditional advantages of the respective mechanical clamping devices.

# The basis for mechanical clamping devices

The tried and tested T-slots offer maximum flexibility for fastening the clamping devices.

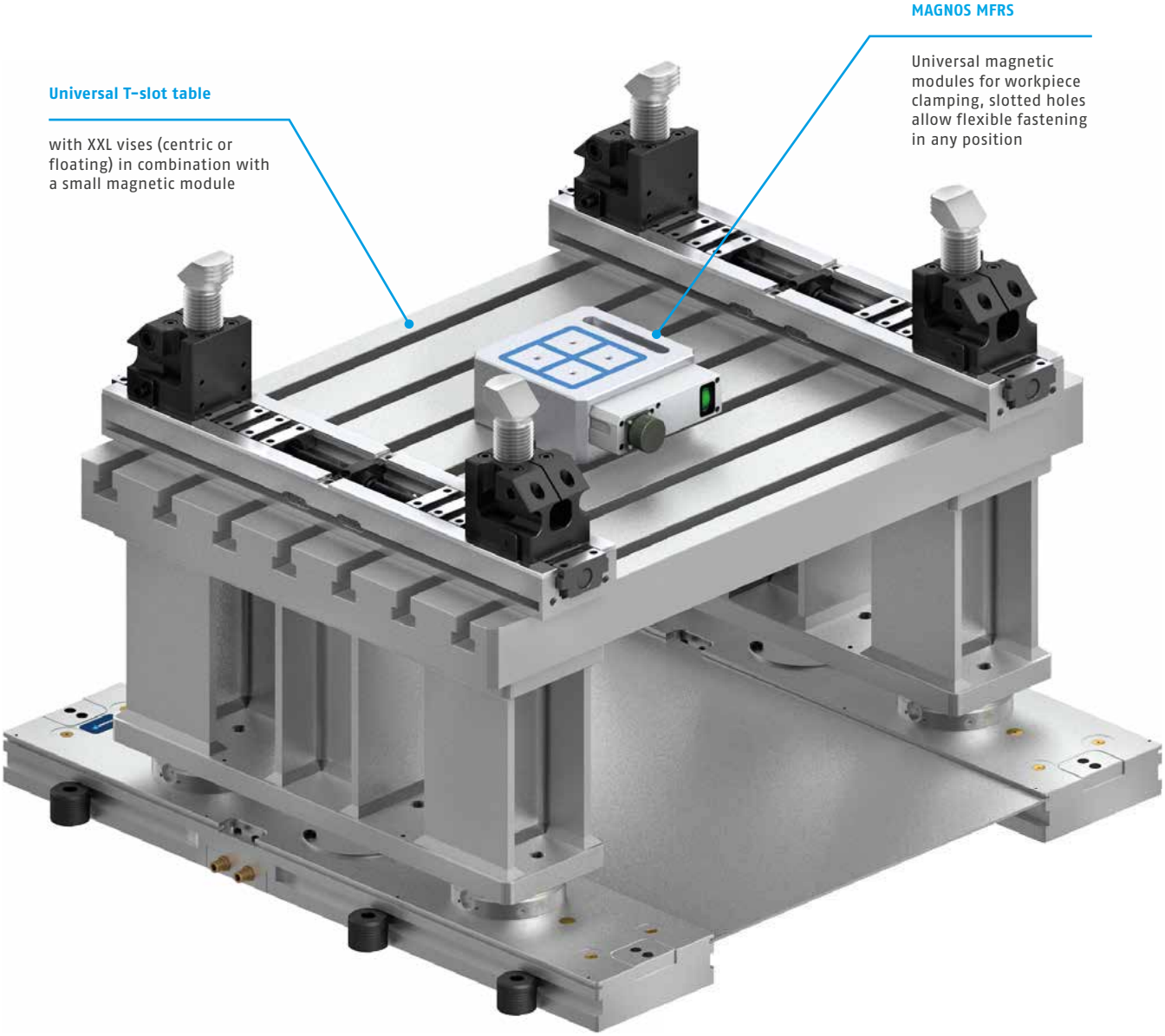

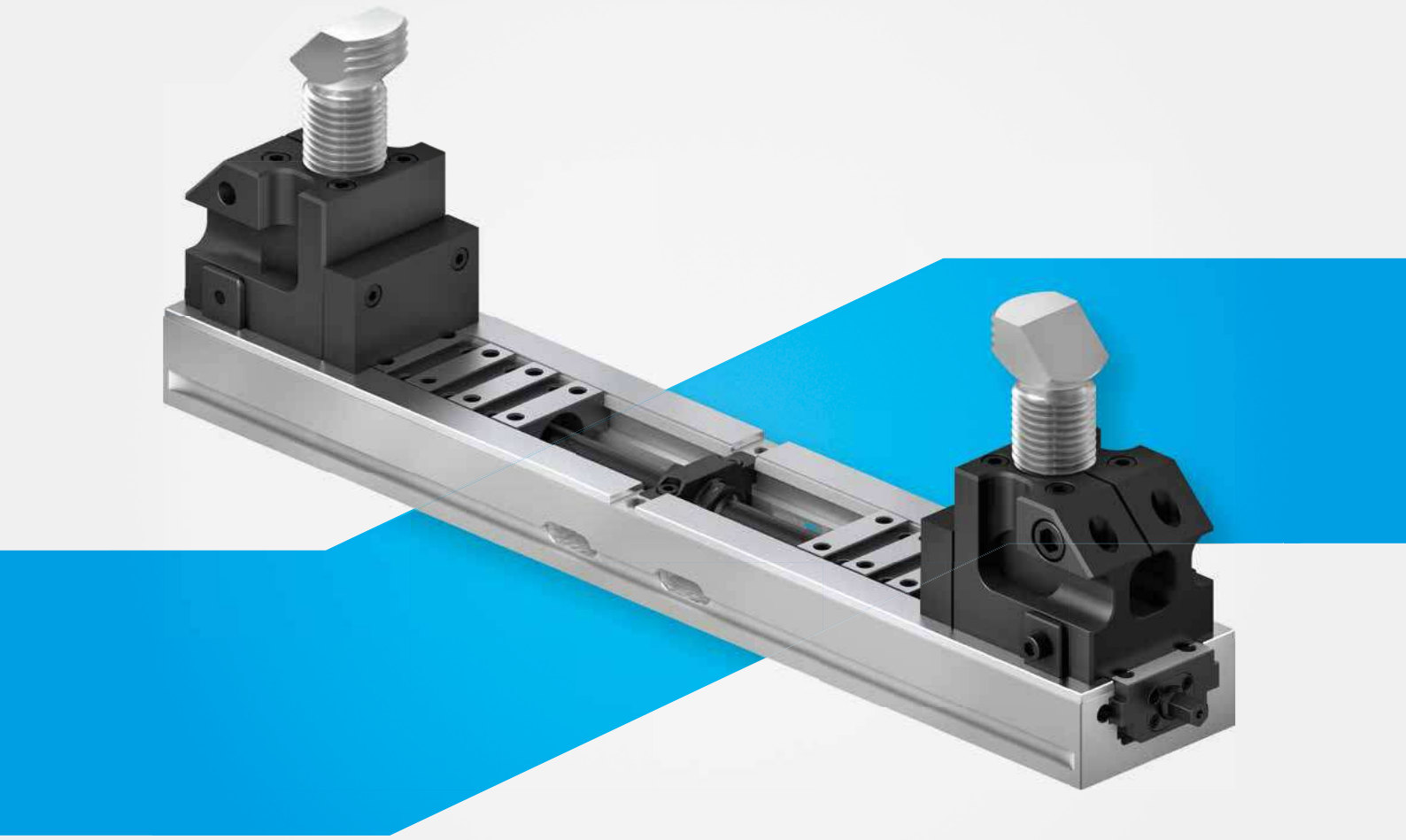

# KSC3 vises in XXL version with height-adjustable multi-clamping jaw

The XXL vise combines proven technology with the requirements of clamping and machining tasks for large components.

# Clamping concept with centric and balancing action

Thanks to its sophisticated mechanism, the XXL vise can be used as a centric as well as a floating vise for large-sized components. The two functions can be converted quickly and easily with just two screws.

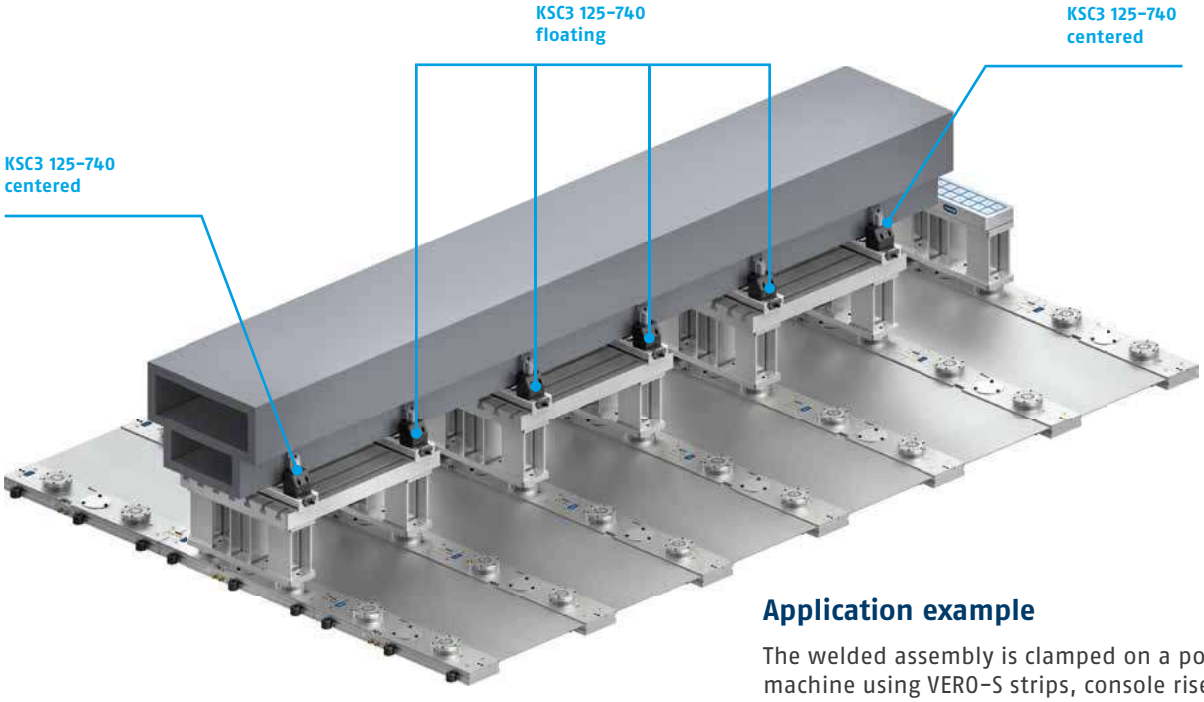


## Application example

The welded assembly is clamped on a portal milling machine using VERO-S strips, console risers and KSC3 vises. The vises at the ends of the components are positioned centrically, while the center vises are all set in floating/balancing mode to prevent over-tightening and distortion.

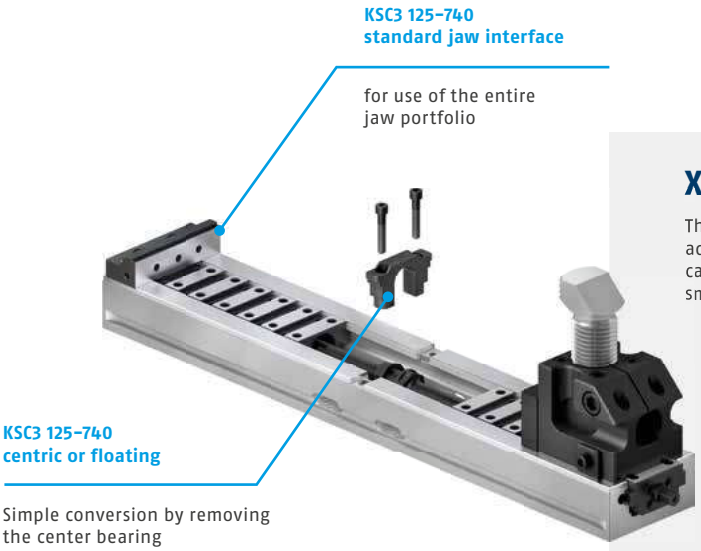


## XXL jaw

The multifunctional, robust pull-down jaw with grip effect and height adjustment. It enables the clamping of raw parts. At the same time, it can also be used for the precise clamping of finished parts thanks to a smooth support stage, which makes it uniquely flexible.

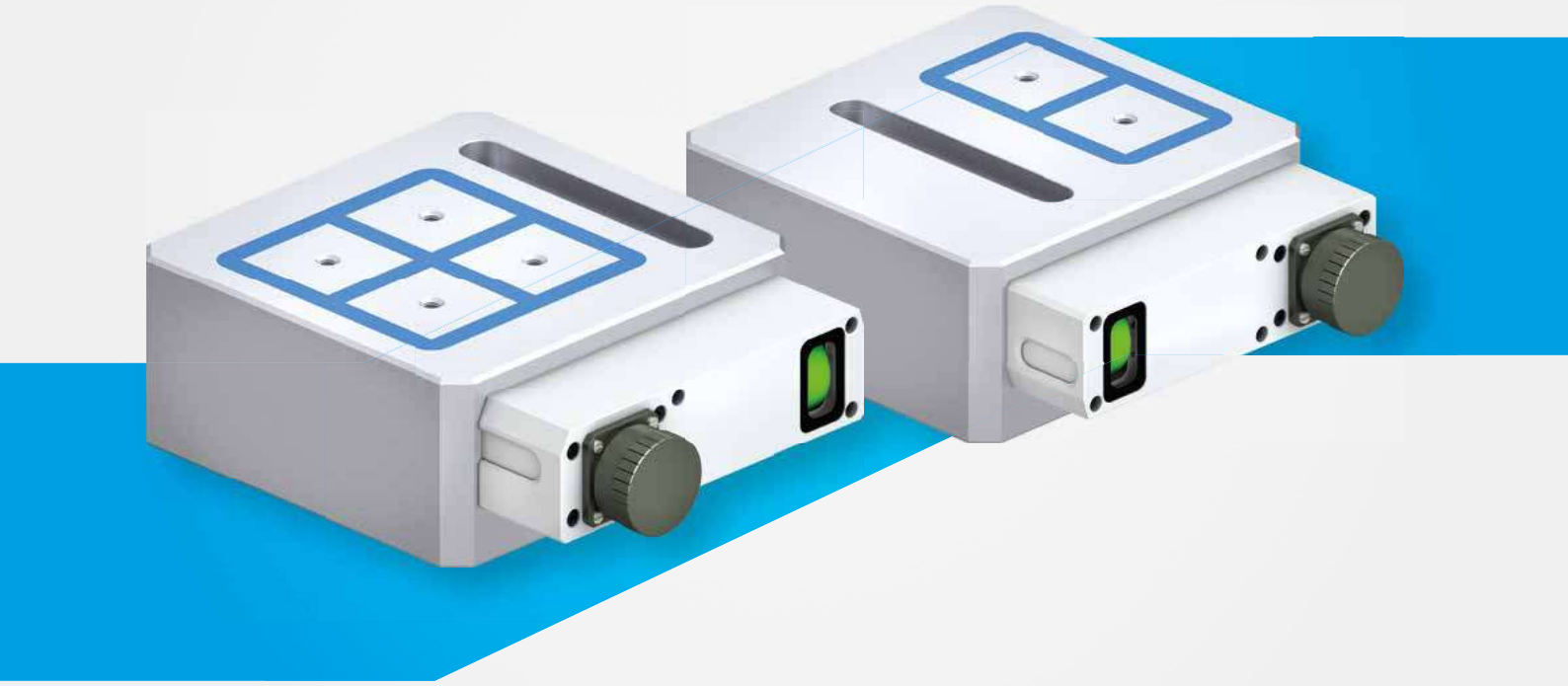

# MAGNOS MFRS magnetic modules: small and adaptable

Universal magnet modules with RED (unclamped) and GREEN (clamped) status display can be used individually for workpiece clamping. They can also be used as an addition to existing clamping devices to reduce vibrations.

# Small flexible magnetic modules for adaptation to slot table tops

These compact electropermanent magnetic modules with patented status display can be used universally. They can be fastened to a T-slot table using the slotted hole. This is not only possible in the longitudinal direction, but also in an angular position and can therefore be adapted to any machining task. They are used in combination with other clamping devices and enable compensating clamping by means of mobile pole extensions and reduce vibrations in the component that can occur during machining.

**Slotted holes**

Allow flexible fastening in any position

MFRS-4-A2-050 200x190

MFRS-2-A2-050 200x190

## Application example

Clamping of a welded assembly on a gantry milling machine with VERO-S strips, console risers and KSC3 vises. The vises are used as centric clamping vises at the component ends and as floating vises in the middle. The magnetic clamping modules increase the clamping force/component rigidity and counteract the machining vibrations that occur.

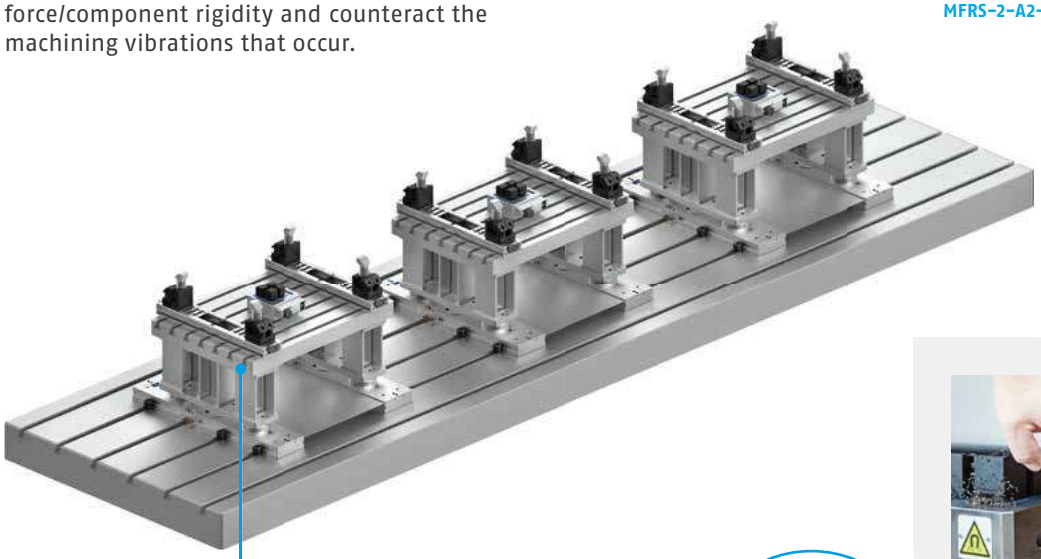

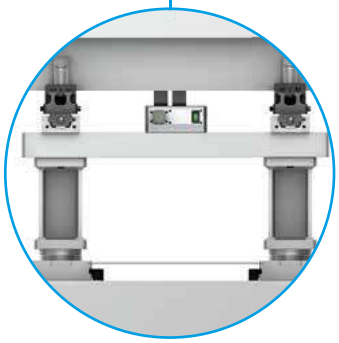

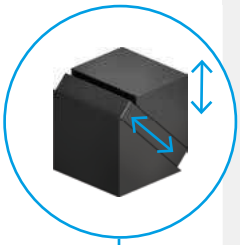

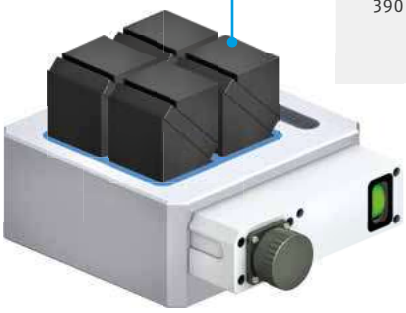

## Easy Turn pole extension

These compensating elements can clamp and lock without having to exert force. They can absorb tensile and pressure loads with a maximum clamping force of up to 390 DaN per pole field.

# MFRS magnetic chucks

Electropermanent magnetic chucks enable individual workpiece clamping and are characterized by their homogeneous and flat clamping. The resulting extra rigid and powerful clamping enables the application of enormous cutting parameters both during rough machining of the workpiece (using mobile pole extensions) and during finish machining (with fixed pole extensions). This makes the technology extremely efficient.

# Clamping modules provide impetus for the future

Thanks to comprehensive consultation by the experts in SCHUNK clamping technology, an optimal magnetic clamping technology solution could be installed on the gantry milling machine.

*With the MAGNOS MFRS magnetic chucks, it is possible to clamp long welded assemblies with minimum distortion. This ensures perfect processing quality.*

*All functions are clearly visually displayed and controllable on the control panel of the machine.*

## Application example

A welded assembly is clamped on a gantry milling machine using VERO-S strips and MAGNOS magnetic chucks. The high clamping force contributes significantly to the rigidity of the components. The pole extensions, both mobile and fixed, counteract machining vibrations and are automatically compensating.

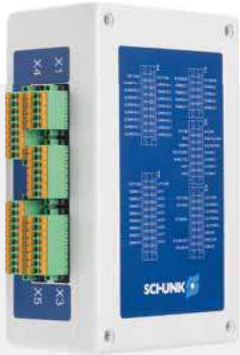


**PLC box**
for installation between KEH plus control unit and PLC machine control

**Hand-held remote control**
with plain text display

## KEH plus control

**Electronic control unit for modular control of several magnetic chucks.**

Can be combined with the modular cable versions for all applications. The hand-held remote control has a plain text display, 16 holding force levels and selection options as well as optional PLC functions.

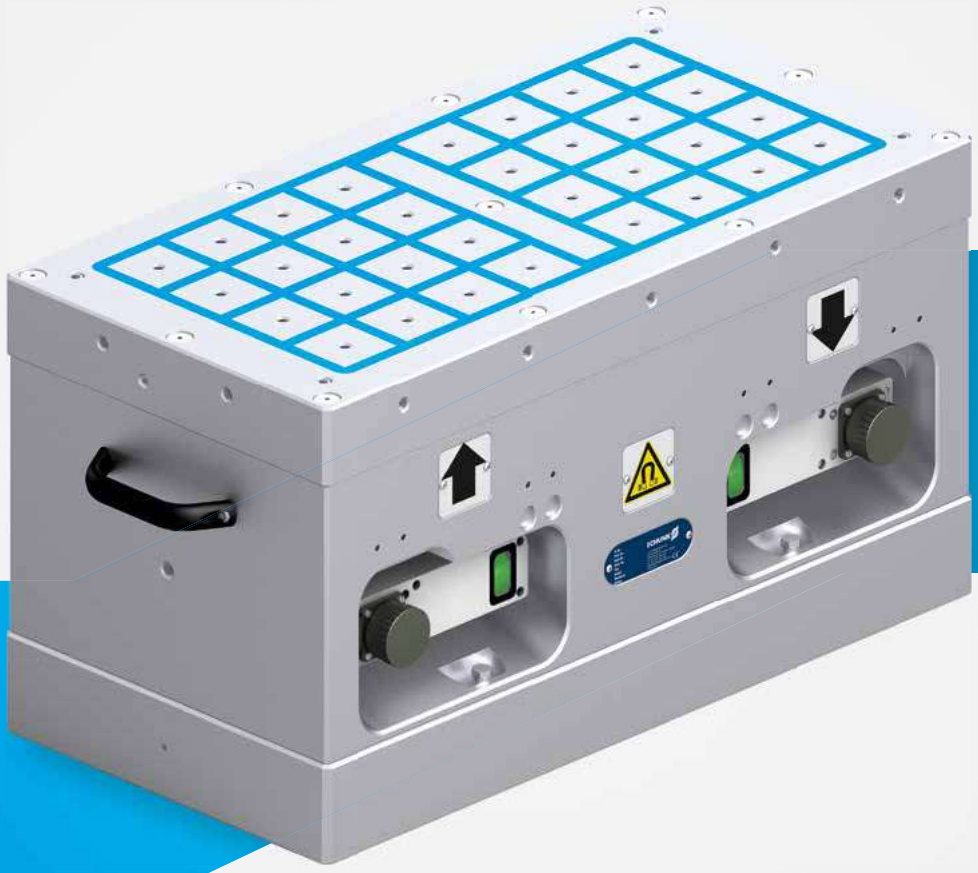

# MAGNOS Double magnets Magnetic! Strong! Flexible!

Magnetic flexibility for efficient workpiece machining. Rapid set-up, effortless handling, makes your day-to-day work in industry easier.

# Fields of application

## For any machine type

The SCHUNK double magnet system is the perfect solution for all machine types. No matter which machine it is, medium-sized or large-scale machines, gantry machines or traveling columns – the double magnets flexibly adapt to each requirement. The system offers complete flexibility and enables effortless machining of heavy workpieces. Due to simple handling and the modular design, tooling is more efficient and the working processes become even more effective.

## For any machine table

Versatility for any machine table. The double magnet system perfectly fits on T-slots, steel plates and grid holes. No matter which machine type is used – you benefit from easy positioning and effortless handling. Efficient set-up and precise machining of the workpieces are child's play. Discover the freedom and flexibility of the modular system. Simplify your workflows and increase productivity.

*With the help of the SCHUNK magnetic solution, large-format welded constructions of up to 12,000 mm can be processed on a Correa OX M gantry type milling machine. Image: SCHUNK*

# Advantages – your benefits

- Total flexibility for any clamping situation
- Shortens set-up times for workpieces of different sizes
- Free positioning on the machine table (independent of T-slots or grid holes)
- Easy positioning of the modules due to integrated rollers on the machine table side
- Easy handling and moving of the double magnets on the machine table without the need for a crane
- Modular system
- No additional substructures required, 5-sided machining possible
- Ergonomics for the staff
- The advantages of the magnetic clamping technology such as distortion-free clamping of large workpieces remains unchanged

*The machine table is completely covered with a steel plate and surface-milled. On this mirror-finish surface, the clamping modules can be very easily positioned. The ideal distance of the double magnets was tried in series of tests. Image: SCHUNK*

# Robust, versatile, efficient. For small and large workpieces

**MAGNOS double magnets effortlessly handle even heavy workpieces with impressive strength. Versatile adaption to different machine tables and types allows flexible applications. Thanks to its efficiency, they shorten set-up times and increase productivity of your manufacturing processes.**

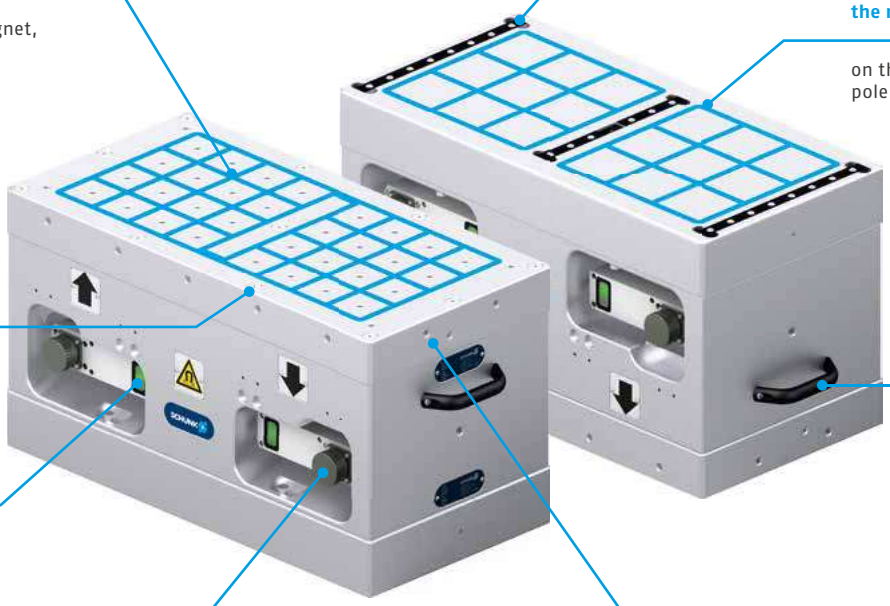

# Easy plant engineering

## Moving, activating, done!

The double-magnet system simplifies set-up of large workpieces and facilitates or accelerates daily work routine. The heavy clamping devices can be removed with ease without any cranes at all. The intuitive handling allows for fast activation and set-up, independent from machine type or table. Can be used flexibly on T-slots, steel plates and grid holes. This saves valuable time during workpiece processing. Experience the efficiency of our modular systems and optimize productivity of your plant.

*As soon as the lower magnetic chuck is deactivated, the machine operator can effortlessly move the clamping block by hand Image: SCHUNK*

*The machine table of the gantry type milling machine measures 12,500 mm x 3,000 mm. A partition wall allows machining in shuttle operation Image: SCHUNK*

## Revolutionized magnetic field control

MAGNOS MFRS magnetic chucks require only one short electric pulse through which the coils are briefly energized with current. This pulse reverses the polarity of the reversible AlNiCo magnets. Due to the special arrangement of the neodymium permanent magnets, the magnetic field is then short-circuited in the magnetic chuck or guided outwards into the workpiece, and the magnetic field is amplified, depending on the state.

*Since the machine table is free of grooves and holes, it is very easy to clean. Once the clamping modules are positioned, the pipes and welding frames are placed on the MAGNOS clamping modules by crane and clamped. Image: SCHUNK*

# Example of welded assembly Modularity

**By using the modular components, devices can be created easily and individually. The modules are versatile and not tied to a specific workpiece or device. The unique modularity enables contemporary customization and meets market requirements. This is particularly advantageous for smaller batch sizes and greater varieties of workpieces through to single-part production.**

**Module 1**
**Universal T-slot table**

With XXL vises
(centric or floating)

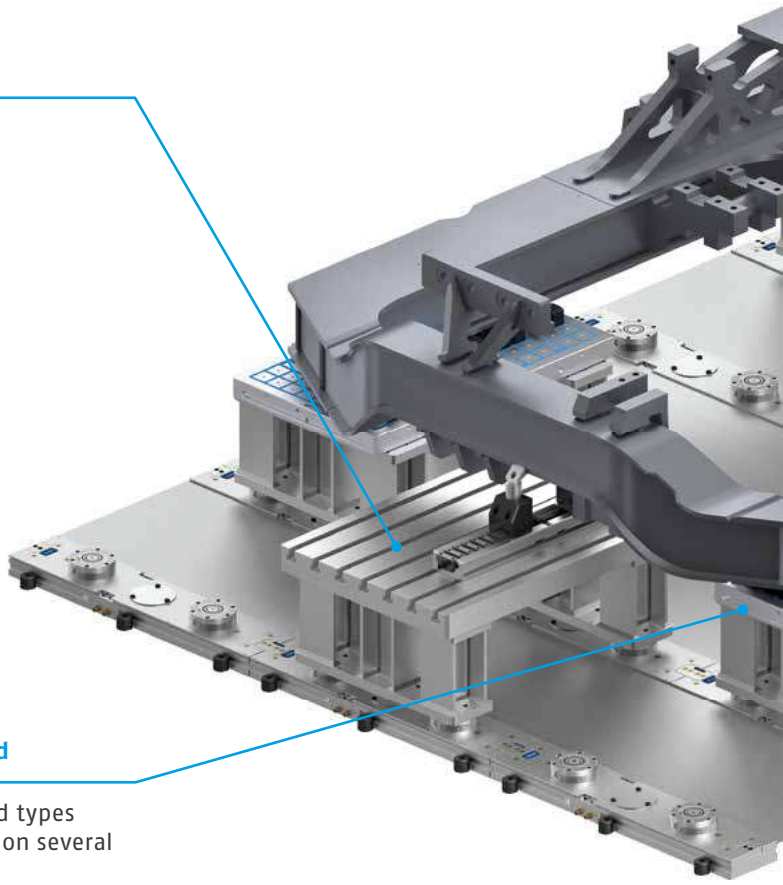

**Module 2**
**Consoles with**
**MAGNOS MFRS standard**

Various dimensions and types
can be used, mounted on several
consoles, for example
MFRS 1000 x 600 mm

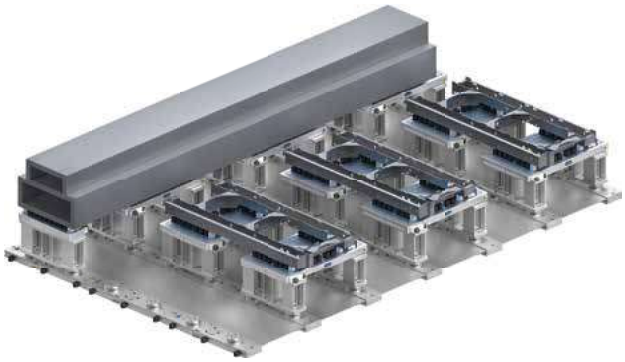

**Application 2**
Multiple clamping of various medium-sized welded frames using magnetic clamping technology

**Application 3**
Long welding assembly with XXL vises (centric and floating) and magnet modules

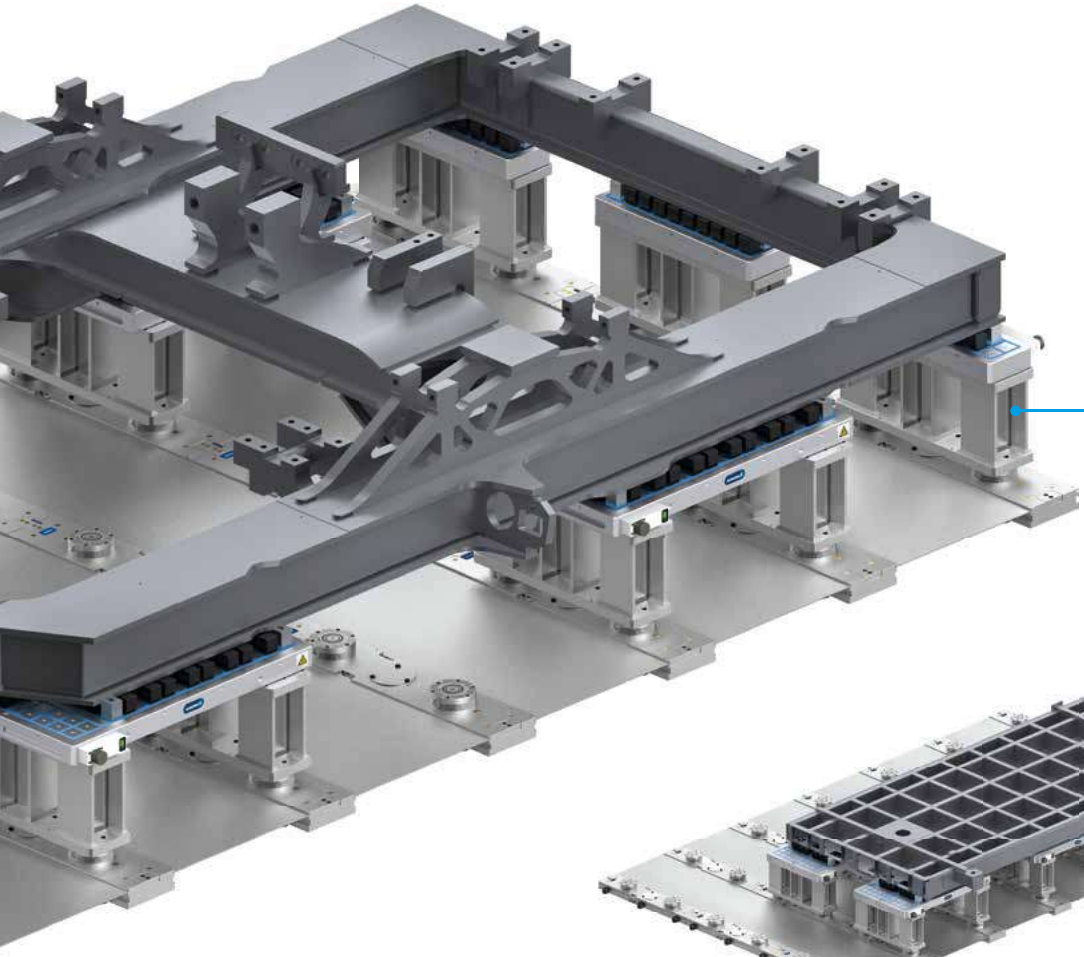

**Module 3**
**Console with MAGNOS MFRS**

Precisely fitting magnetic chucks on console for maximum flexibility

**Application 1**
Clamping of a welded assembly (bogie) with two centric vises for alignment and magnetic chucks

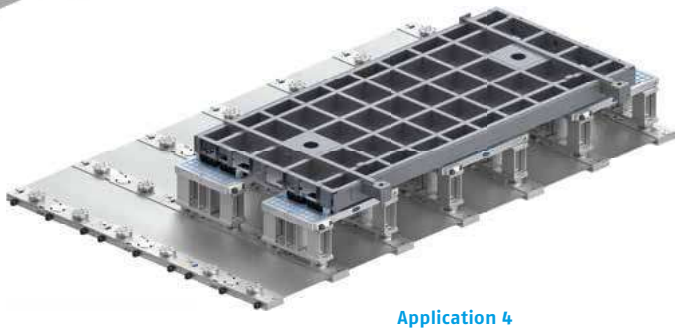

**Application 4**
Clamping of a wide, ribbed welded construction on magnetic chucks

# Example
# Palletizing crane pallet

**Crane pallets can be used efficiently to be loaded or equipped outside the machine during idle times. The workpieces are clamped and the entire unit (pallet, clamping device and workpieces) is loaded onto the VERO-S zero-point clamping bars using an overhead crane. This eliminates the need for time-consuming cleaning and set-up times on the machine.**

**Pre-assembly of workpieces on a crane pallet**
Crane pallet for clamping the workpieces in OP 20 using VERO-S clamping pins for direct workpiece clamping and magnetic clamping technology, set-up and loading outside the machine (in non-productive time).

**Workpiece with VERO-S clamping pins on the back**
Quick and easy positioning and clamping using VERO-S modules for OP 20 (finishing)

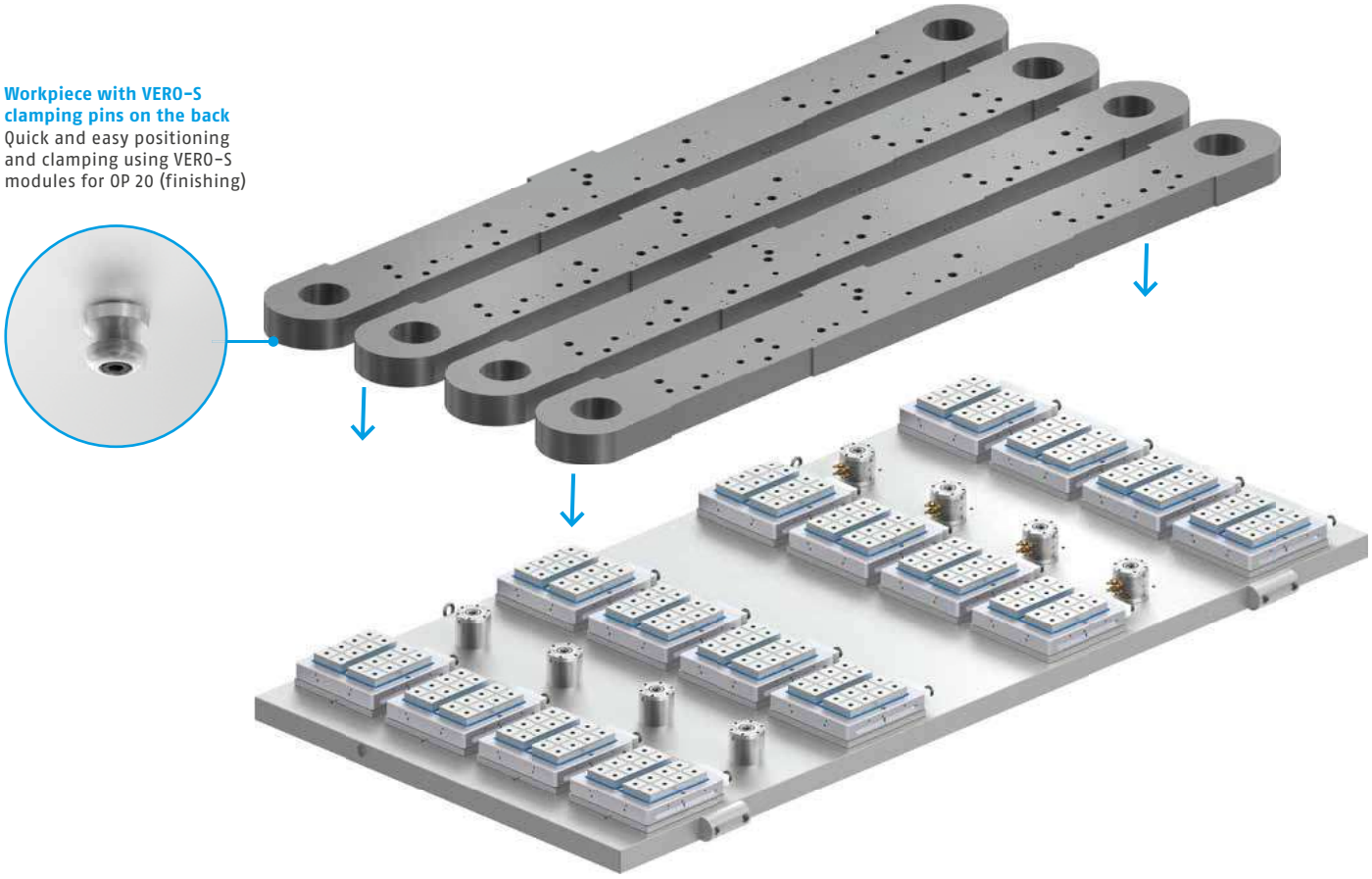

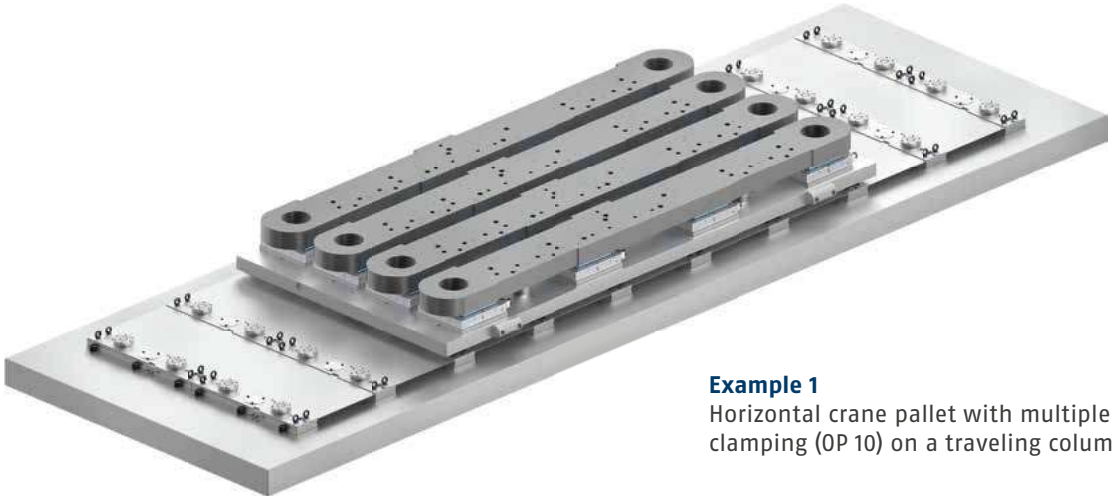

**Example 1**
Horizontal crane pallet with multiple workpiece clamping (OP 10) on a traveling column machine

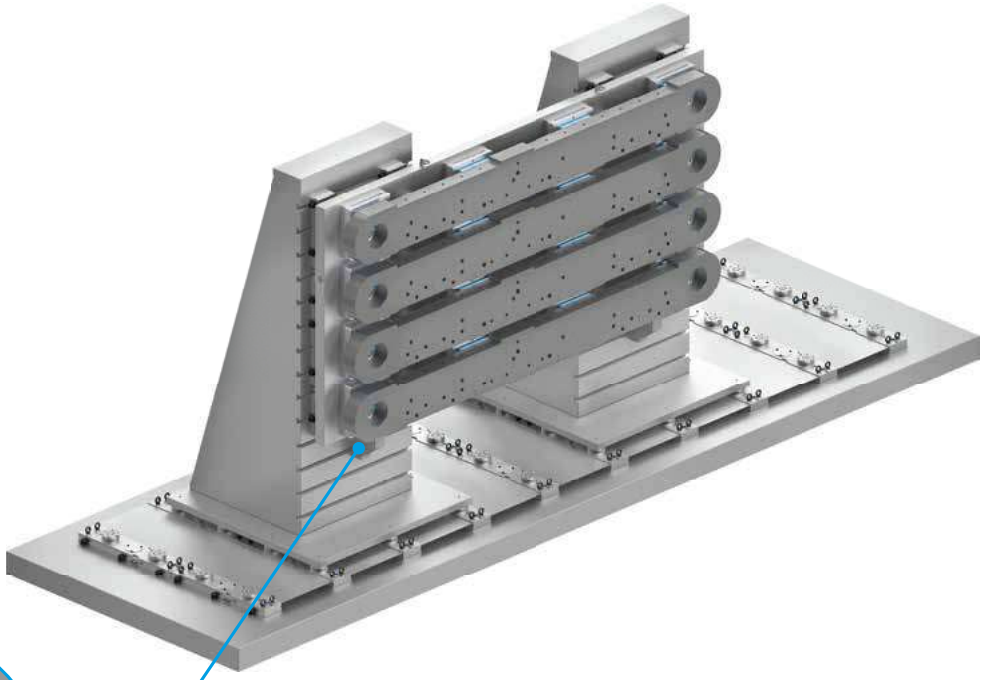

**Positioning and centering aid for vertical assembly**
Exemplary design of a centering and insertion aid for crane pallets during vertical loading

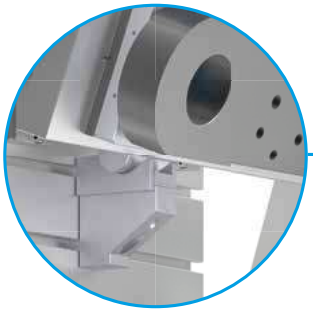

**Example 2**
Vertical crane pallet with multiple workpiece clamping on a traveling column machine, clamped on clamping angles using VERO-S strips

# Combination with existing clamping devices

**Existing clamping devices such as clamping angles or individual fixtures can be easily and flexibly integrated into the XXL modular system with the aid of slight modifications (SCHUNK clamping pins and centering rings).**

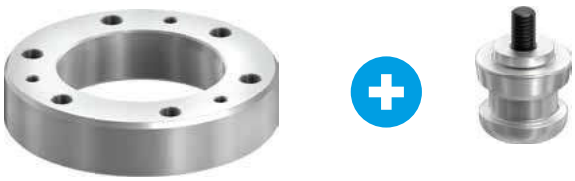

**Centering ring and VERO-S clamping pin**
can be used to retrofit existing clamping devices for the XXL system. The standardized components can be easily and flexibly integrated by the customer.

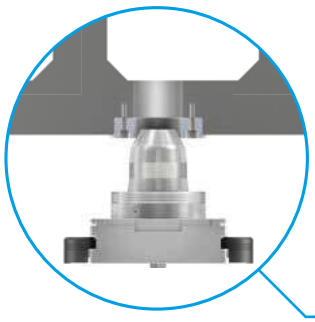

**Standardized pre-centering pins and centring rings (counterpart)**

enable quick and easy positioning of angle plates

# Overview of components

| VERO-S strips | ID | Designation |
|---|---|---|
| | 1533414 | VERO-S strip 1000-2<br>2x NSE3 138-K |
| | 1533453 | VERO-S strip 1000-2-Z<br>2x NSE3 138-K-Z |
| | 1533454 | VERO-S strip 1000-3<br>3x NSE3 138-K |
| | 1533459 | VERO-S strip 500-1<br>1x NSE3 138-K |
| | 40102803 | Pre-centering ring ø 90 mm |
| | 1571486 | Pre-centering pin short ø 90 mm |
| | 1571513 | Pre-centering pin long ø 90 mm |
| | 0471153 | SPC 40 |
| **Consoles / clamping devices** | **ID** | **Designation** |
| | 1567473 | Riser |
| | 1584206 | T-slotted plate |
| | 1531593 | KSC3 125-740 |
| | 1560491 | Multi-jaw |
| **MAGNOS double magnets** | **ID** | **Designation** |
| | 1546522 | MFRS-DM-A1-050 430x315 |
| | 1546528 | MFRS-DM-A1-050 630 x 315 |
| | 1546542 | MFRS-DM-A1-050 815 x 315 |
| | 1546544 | MFRS-DM-A1-050 1000 x 315 |

| MAGNOS | ID | Designation |
|---|---|---|
| | 1584239 | MFRS-A1-050 650 x 190 M |
| | 1584248 | MFRS-A1-050 650 x 190 S |
| | 1560493 | MFRS-A1-050 800 x 600 |
| | 1560230 | MFRS-2-A2-050 200x190 |
| | 1550750 | MFRS-4-A2-050 200x190 |
| | 0420091 | Pole extension fixed PVF 50-54 |
| | 0420092 | Pole extension flex PVB 50-54 |

| KEH plus | ID | Designation |
|---|---|---|
| | 0420650 | KEH plus 01 400V/50Hz |
| | 0420652 | KEH plus 04 400V/50Hz |
| | 0420653 | KEH plus 08 400V/50Hz |
| | 0420665 | HABE KEH plus 01-HKR |
| | 0420673 | HABE KEH plus 08-HKR |
| | 0420680 | BK-5 1x4P-1x4P |
| | 0420690 | VBK-10 1x4P-1x4P |
| | 0420683 | VBK-5 1xIL-4x4P |
| | 0420693 | VBK-10 1xIL-4x4P |

# Contact persons for support and details

**If you should have any questions, individual concerns or need for advice, our experienced contact persons will be happy to help.**

- **Individual advice**
  for optimizing the clamping situation on site by specialists
- **Project planning and design**
  by an experienced design team
- **Installation, instruction / commissioning**
  by qualified service technicians

**Alexander Heim**
Phone +49-7572-7614-1048
Mobile +49-151-2610-1517
alexander.heim@de.schunk.com

**Tim Janke**
Tel. +49-7572-7614-1301
Mobile +49-171-4191-156
tim.janke@de.schunk.com

CUSTOMER TESTIMONIAL

# Track switches ready to go

**Magnetic clamping technology – Leipzig streetcar specialist Iftec managed to fully use the potential of a newly purchased moving column machine using a magnetic clamping solution from SCHUNK for the production of tracks and switches. Even rush orders can now be fulfilled efficiently.**

*Before groove milling, the track elements are processed with the face-milling cutter. The workpieces are clamped on the foot and on the side on the rail head.*

*In order to compensate for heat distortion, the square profiles are clamped both on the foot and laterally by magnet. Three set-ups are sufficient to fully process the lugs.*

**"Today, a complete pair of tongue rails can be produced series-independently and efficiently and if required manufacturing parameters can be flexibly adjusted."**

Stefan Kötz,
Production Manager Iftec

**"With the MTE milling cutter and the easy to set-up magnetic clamping solution, it is possible to operate much more flexibly on the market. Furthermore, we are now able to carry out urgent repair orders at short notice."**

Stefan Kötz,
Production Manager Iftec

*For groove milling, up to 35 mm of material is removed with a torque of up to 1,750 Nm in a single chip.*

**"With this clamping system, we have low outlay, we attain a high degree of utilization, are extremely flexible and very fast."**

Michael Diemer, Production Manager in Prefabrication at BLEICHERT

*Assembled vertically, the magnetic clamping solution is particularly easily accessible. For loading and unloading, only one operator is required.*

CUSTOMER TESTIMONIAL

# Efficient XXL pipe machining on five sides

**The processing of long steel parts often entails significant effort, starting with fitting the clamping stipes, through repeated reclamping, right up to lengthy manual flame straightening. The logistics and handling specialist BLEICHERT Automation from Osterburken chose a significantly more efficient path: SCHUNK MAGNOS magnetic chucks mounted vertically on DEMMELER angle plates allow flexible and low-deformation set-up of three to eight meter long pipes on a SORALUCE rigid bed milling and drilling center as well as highly efficient complete processing on five sides.**

**"The big advantage of the SCHUNK system is that, with the poles, we can set the clamping modules quickly at different pipe cross-sections. You simply unscrew a row of poles and can immediately clamp a different cross-section. So we use three rows of poles for the 200 mm pipe and four for the 300 mm."**

Michael Diemer, Production Manager
in Prefabrication at BLEICHERT

*The angle with the SCHUNK MAGNOS magnetic modules are laterally arranged on the machine table, meaning the SORALUCE rigid bed milling and boring center can be used at any time for other processing too.*

CUSTOMER TESTIMONIAL

# Clamping modules provide impetus for the future

**The special machine manufacturer G. Kraft Maschinenbau GmbH uses magnetic clamping technology from SCHUNK for the machining of large-format welded assemblies. With the standardized MAGNOS MFRS magnetic chucks, components can be clamped securely and with low distortion. The solution delivers impressive performance with flexibility, ergonomics and future-proofing. The user benefits from reliable processes and greater cost-effectiveness – not least through perfect machining quality.**

**"We are able to perform set-ups increasingly quickly, because we are steadily gaining in experience, and above all, we are manufacturing in higher quality than before."**

Thomas Zimmer, Planning Manager
at Kraft Maschinenbau

*Precise and reliable assembly clamping results in a safe and qualitatively flawless machining process with a high surface quality. Image: SCHUNK*

*Thanks to the exemplary cable management, employees can move around the machine safely and without tripping hazards Image: SCHUNK*

*Patented status display: "Green" indicates magnetization status. Now the workpiece is firmly clamped to this magnetic clamping module. Image: SCHUNK*

*A discussion between experts with Roland Wördekemper, CNC programmer and machine operator at Kraft, Tim Janke, product specialist for magnetic clamping technology/vacuum clamping technology at SCHUNK, and Thomas Zimmer, deputy planning manager at Kraft Maschinenbau and head of the gantry milling machine project. Image: SCHUNK*

**"SCHUNK has provided us with absolutely solution-oriented advice for this challenging task."**

Thomas Zimmer, Planning Manager
at Kraft Maschinenbau

CUSTOMER TESTIMONIAL

# Tetris XXL on the gantry machine

**With a highly flexible clamping concept, the Carinthian mechanical engineering specialist KOSTWEIN is revolutionizing the clamping of large-format welded frames at its Varaždin site in Croatia. Where previously a great deal of experience, patience and intuition was required, the magnetic clamping solution from SCHUNK streamlines the set-up process and ensures low-deformation clamping right from the start.**

*The machine table is completely covered with a steel plate and surface-milled. On this mirror-finish surface, the clamping modules can be very easily positioned. The ideal distance of the clamping blocks was trialed in a series of tests.*

*The roller block rails on the bottom make it very easy to position the clamping blocks when deactivated. As soon as the magnetic chuck is activated, the clamping block is securely clamped on the machine table.*

**"We achieve the greatest benefits from the magnetic clamping solution during deformation-free clamping and during set-up and dismantling. We save 60 to 70 percent on set-up times."**

Josef Malle, Plant Manager Kostwein Group

*With the help of the SCHUNK magnetic solution, Kostwein processes large-format welded constructions of up to 12,000 mm on a Correa FOX M gantry type milling machine.*

*From left to right: Bernhard Kraus, SCHUNK Sales Manager Austria; Josef Malle, Plant Manager, Kostwein Varaždin; Christian Schlintl, SCHUNK Technical Consultant Austria Region South/East.*

**"In the past, there were often problems with cooling lubricant and chips in the T-slots of the machine table. Today, the table is simply wiped clean with a broom and scraper. The solution is optimized to the maximum."**

Josef Malle, Plant Manager Kostwein Group

**H.-D. SCHUNK GmbH & Co.**
**Spanntechnik KG**

Lothringer Str. 23
D-88512 Mengen
Tel. +49-7572-7614-1300
schunk.com

Follow us

We print sustainably

climate neutral
printed product with
$CO_2$ compensation
klima-druck.de · ID-Nr. 24161950
VDM+

1583315-3M-04/2024