ENGLISH

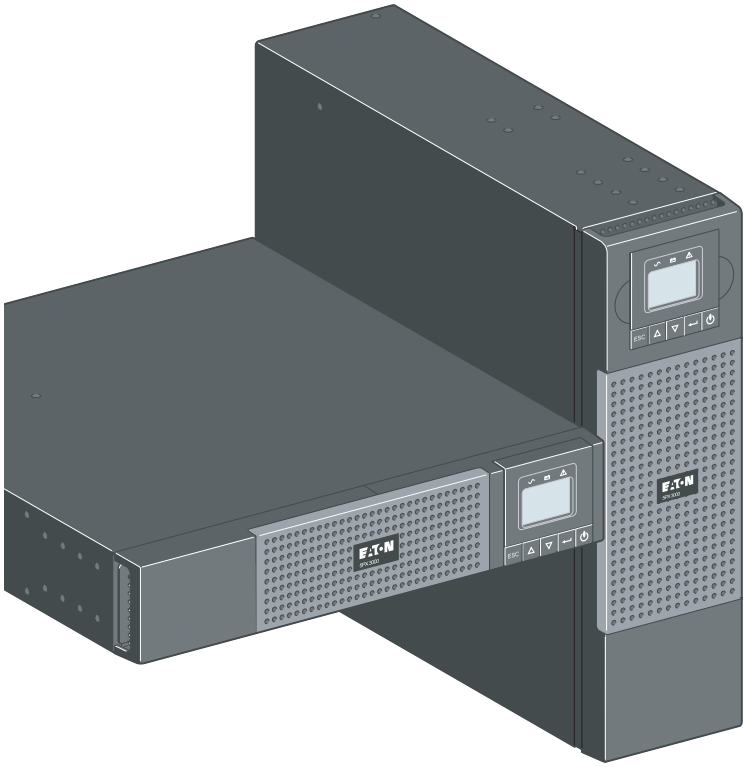

5PX 1500i RT2U
5PX 2000i RT2U
5PX 2200i RT2U
5PX 3000i RT2U
5PX 3000i RT3U
5PX EBM 48V RT2U
5PX EBM 72V RT2U
5PX EBM 72V RT3U

Installation and user manual

Copyright © 2010 **EATON**
All rights reserved.

Service and support:
Call your local service representative

614-07977-00_EN

Certification Standards

UPS directives:

- Safety: IEC 62040-1: 2008 (C2)
- EMC: IEC 62040-2: 2005
- Performance: IEC 62040-3: 2010

CE mark (EN 62040-1: 2008 and EN 62040-2: 2006 (C1))

Class B emission level CISPR 22: 2005 + A2 2006 (EN 55022)
Harmonics emission: IEC 61000-3-2 edition 3.2: 2009
Flickers emission: IEC 61000-3-3 edition 2: 2008

The EC Declaration of Conformity is available upon request for products with a CE mark.
For copies of the EC Declaration of Conformity, contact Eaton Power Quality or check Eaton website: www.powerquality.eaton.com

Special Symbols

The following are examples of symbols used on the UPS or accessories to alert you to important information:

RISK OF ELECTRIC SHOCK - Observe the warning associated with the risk of electric shock symbol.

Important instructions that must always be followed.

Do not discard the UPS or the UPS batteries in the trash.
This product contains sealed lead acid batteries and must be disposed as it's explain in this manual.
For more information, contact your local recycling/reuse or hazardous waste center.

This symbol indicates that you should not discard waste electrical or electronic equipment (WEEE) in the trash. For proper disposal, contact your local recycling/reuse or hazardous waste center.

Information, advice, help.

Contents

1. Introduction 4

1.1 Environmental protection 4

2. Presentation 5

2.1 Standard positions 5
2.2 Rear Panels 6
2.3 Control panel 7
2.4 LCD description 8
2.5 Display functions 9
2.6 User settings 9

3. Installation 11

3.1 Unpacking and contents check 11
3.2 Installation in tower position 12
3.3 Installation in rack position 12
3.4 Communication ports 13
3.5 Connection with a FlexPDU (Power Distribution Unit) module (optional) 14
3.6 Connection with a HotSwap MBP module (optional) 14
3.7 UPS connection without a FlexPDU or HotSwap MBP module 15

4. Operation 16

4.1 Start-up and Normal operation 16
4.2 Starting the UPS on Battery 16
4.3 UPS Shutdown 16
4.4 Operation on Battery Power 16
4.5 Return of AC Input Power 17
4.6 UPS remote control functions 17

5. Maintenance 18

5.1 Troubleshooting 18
5.2 Battery-module replacement 19
5.3 Maintenance on a UPS equipped with the HotSwap MBP module 20

6. Appendices 21

6.1 Technical specifications 21
6.2 Glossary 22

1. Introduction

Thank you for selecting an EATON product to protect your electrical equipment.

The 5PX range has been designed with the utmost care.
We recommend that you take the time to read this manual to take full advantage of the many features of your UPS (Uninterruptible Power System).

Before installing 5PX, please read the booklet presenting the safety instructions.
Then follow the indications in this manual.

To discover the entire range of EATON products and the options available for the 5PX range, we invite you to visit our web site at www.eaton.com or contact your EATON representative.

1.1 Environmental protection

EATON has implemented an environmental-protection policy.
Products are developed according to an eco-design approach.

Substances

This product does not contain CFCs, HCFCs or asbestos.

Packing

To improve waste treatment and facilitate recycling, separate the various packing components.

- The cardboard we use comprises over 50 % of recycled cardboard.
- Sacks and bags are made of polyethylene.
- Packing materials are recyclable and bear the appropriate identification symbol 01 PET

Materials	Abbreviations	Number in the symbols 01 PET
Polyethylene terephthalat	PET	01
High-density polyethylene	HDPE	02
Polyvinyl chloride	PVC	03
Low-density polyethylene	LDPE	04
Polypropylene	PP	05
Polystyrene	PS	06

Follow all local regulations for the disposal of packing materials.

End of life

EATON will process products at the end of their service life in compliance with local regulations.
EATON works with companies in charge of collecting and eliminating our products at the end of their service life.

Product

The product is made up of recyclable materials.
Dismantling and destruction must take place in compliance with all local regulations concerning waste.
At the end of its service life, the product must be transported to a processing centre for electrical and electronic waste.

Battery

The product contains lead-acid batteries that must be processed according to applicable local regulations concerning batteries.
The battery may be removed to comply with regulations and in view of correct disposal.

2. Presentation

2.1 Standard positions

Tower position

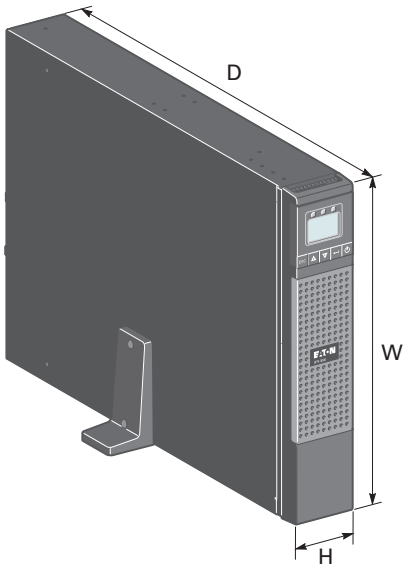

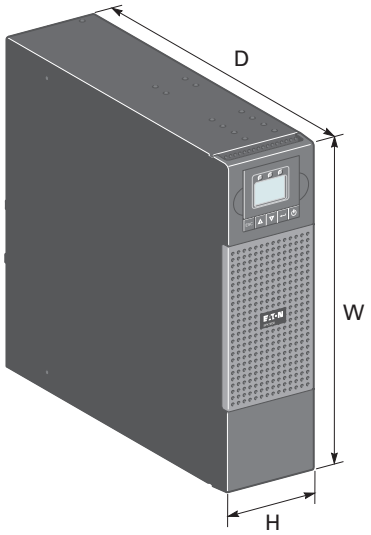

Rack position

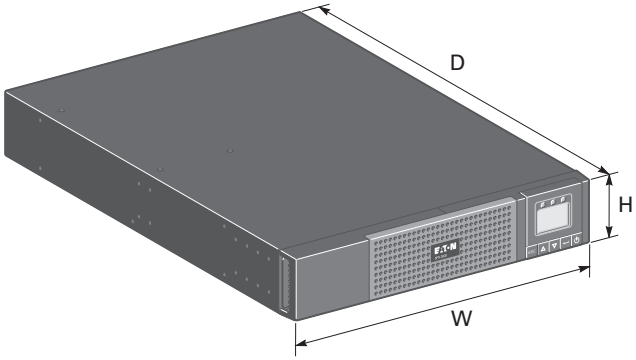

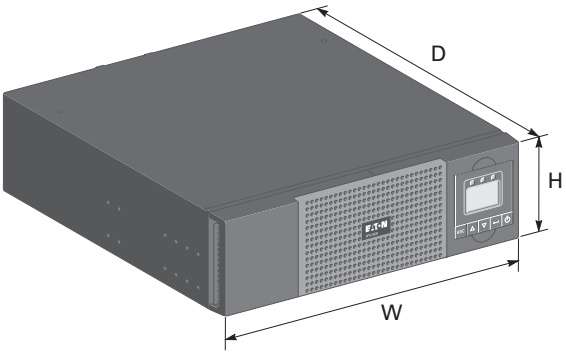

Description	Weights (kg/lb)	Dimensions (mm/inch) D x W x H
5PX 1500i RT2U	27.60 / 60.90	522 x 441.2 x 86.2 / 20.6 x 17.4 x 3.4
5PX 2000i RT2U	28.50 / 62.80	
5PX 2200i RT2U	28.50 / 62.80	
5PX 3000i RT2U	38.08 / 84.00	647 x 441.2 x 86.2 / 25.5 x 17.4 x 3.4
5PX 3000i RT3U	37.33 / 82.30	497 x 441.2 x 130.7 / 19.6 x 17.4 x 5.1
5PX EBM 48V RT2U	32.80 / 72.30	522 x 441.2 x 86.2 / 20.6 x 17.4 x 3.4
5PX EBM 72V RT2U	46.39 / 102.30	647 x 441.2 x 86.2 / 25.5 x 17.4 x 3.4
5PX EBM 72V RT3U	44.26 / 97.60	497 x 441.2 x 130.7 / 19.6 x 17.4 x 5.1

2. Presentation

2.2 Rear Panels

5PX 1500i / 2000i

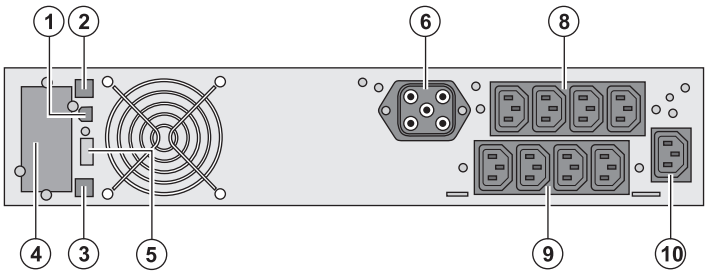

5PX 2200i

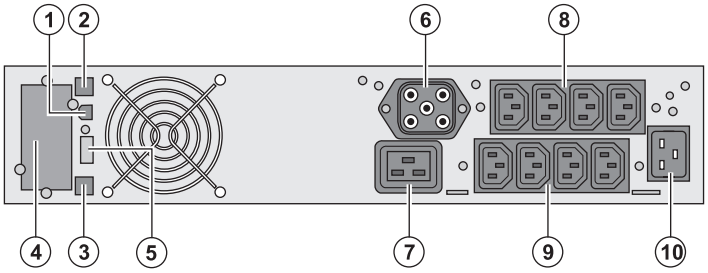

5PX 3000i

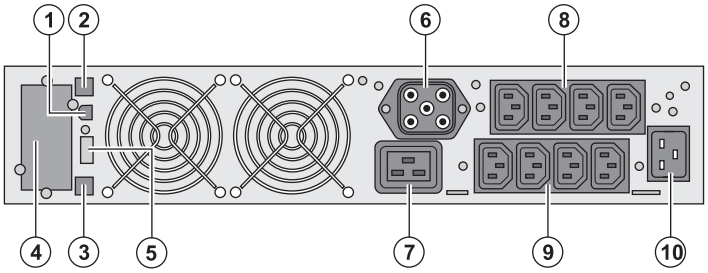

(1) USB communication port
(2) RS232 communication port
(3) Connector for automatic recognition of optional battery modules
(4) Slot for optional communication card
(5) Connector for ROO (remote ON/OFF) or RPO (Remote Power Off) control
(6) Connector for optional battery modules
(7) 16 A outlet for connection of equipment (Primary group)
(8) Two groups of 2 programmable outlets for connection of equipment (Group 1 and 2)
(9) Groups of 4 outlets for connection of equipment (Primary group)
(10) Socket for connection to AC-power source

5PX EBM (optional battery module)

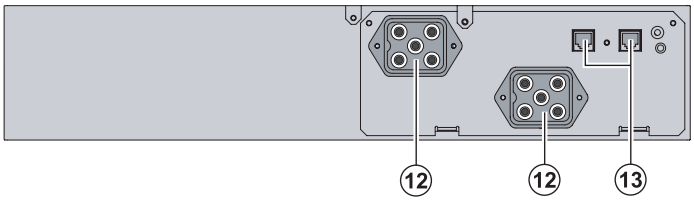

(12) Connectors for battery modules (to the UPS or to the other battery modules)
(13) Connectors for automatic recognition of battery modules

2.3 Control panel

The UPS has a five-button graphical LCD. It provides useful information about the UPS itself, load status, events, measurements and settings.

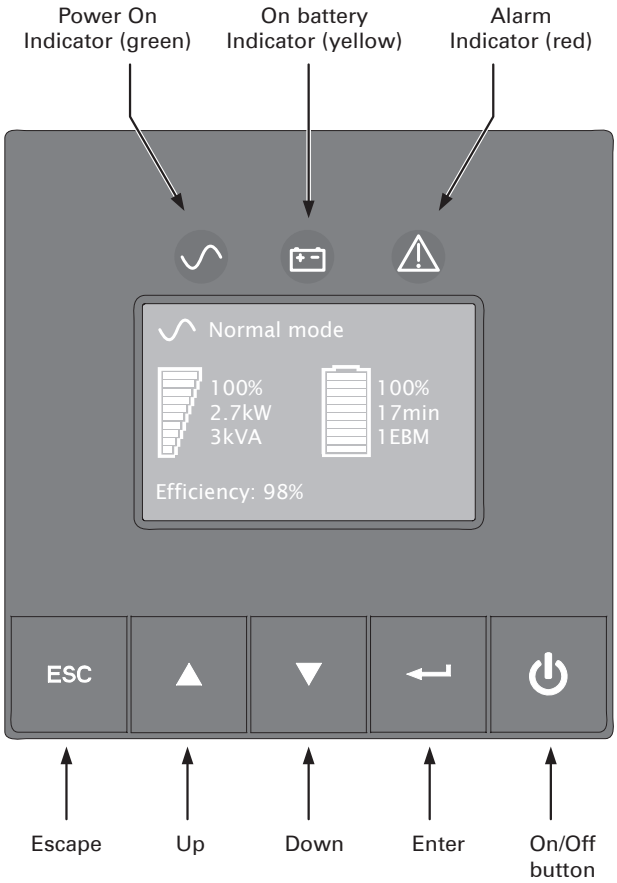

The following table shows the indicator status and description :

Indicator	Status	Description
Green	On	The UPS is operating normally
Yellow	On	The UPS is on battery mode
	Flashing	The battery voltage is below the warning level
Red	On	The UPS has an active alarm or fault. See trouble-shooting on page 18 for additional information.

2. Presentation

2.4 LCD description

As default, or after 5 minutes of inactivity, the LCD displays the screen saver.

The backlight LCD automatically dims after 10 minutes of inactivity. Press any button to restore the screen.

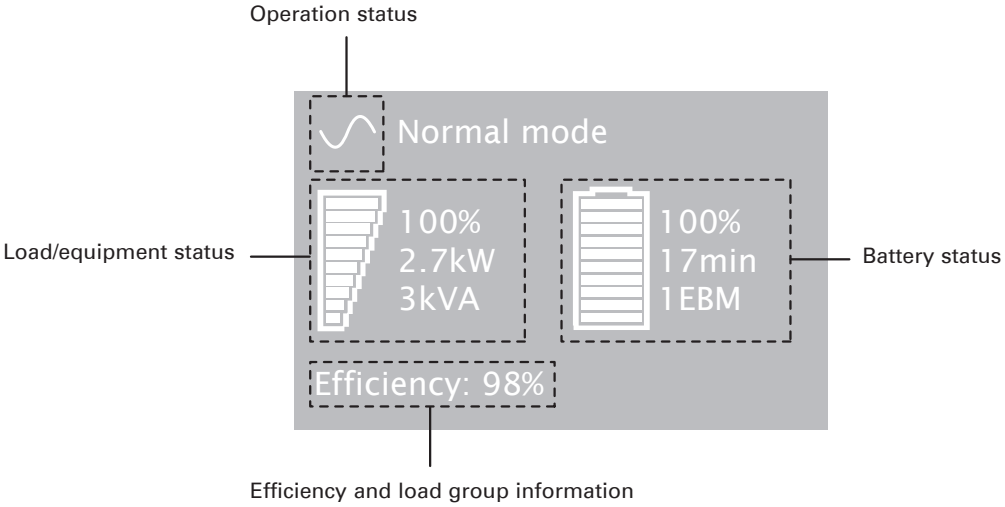

The following table describes the status information provided by the UPS

Note. If other indicator appears, see troubleshooting on page 18 for additional information.

Operation status	Possible cause	Action
Standby mode	The UPS is OFF, waiting for start-up command from user	Equipment is not powered until ⏻ button is not pressed.
Normal mode	The UPS is operating normally.	The UPS is powering and protecting the equipment.
In AVR mode AVR Load protected LED is ON No beep	The UPS is operating normally but the utility voltage is outside normal mode thresholds.	The UPS is powering the equipment through a Automatic Voltage Regulation device. The equipment is still normally protected.
On Battery Battery LED is on 1 beep every 10 seconds	A utility failure has occured and the UPS is in Battery mode.	The UPS is powering the equipment with the battery power. Prepare your equipment for shutdown.
End of backup time Battery LED is blinking 1 beep every 3 seconds	The UPS is in battery mode and the battery is running low.	This warning is approximate, and the actual time to shutdown may vary siginificantly. Depending on the UPS Load and number of Extended Battery modules (EBMs), the "Battery Low" warning may occur before the battery reach 25 % capacity.

2.5 Display functions

Press the Enter (↵) button to activate the menu options. Use the two middle buttons (▲ and ▼) to scroll through the menu structure. Press the Enter (↵) button to select an option. Press the ESC button to cancel or return to the previous menu.

Menu map for Display Functions.

Main menu	Submenu	Display information or Menu function
Measurements		Load W VA / Load A pf / Output V Hz / Input V Hz / Battery V min / Efficiency / Power usage
Control	Load Segments	Group 1: ON / OFF Group 2: ON / OFF These commands overrule user settings for load segments.
	Start battery test	Starts a manual battery test
	Reset fault state	Clears active fault
	Restore factory settings	Returns all settings to original values (UPS restart required)
	Reset power usage	Clears power usage measurements
Settings	Local settings	Sets product general parameters
	Input / output settings	Sets Input and output parameters
	ON / OFF settings	Sets ON / OFF conditions
	Battery settings	Sets battery configuration
Fault log		Displays event log or alarms
Identification		UPS Type / Part Number / Serial Number / Firmware release / Com card address

2.6 User settings

The following table displays the options that can be changed by the user.

	Description	Available settings	Default settings
Local settings	Language	[English] [Français] [Deutsch] [Italiano] [Português] [Español] [Русский] Menus, status, notices and alarms, UPS fault, Event Log data and settings are in all supported languages.	English User selectable when UPS is powered for the first time.
	LCD settings	Authorises to modify LCD screen brightness and contrast to be adapted to room light conditions.	
	Audible alarm	[Yes] [No] Authorises to enable or disable the buzzer if an alarm occurs.	Yes
In/Out settings	Output voltage	[200 V] [208 V] [220 V] [230 V] [240 V]	230 V User selectable when UPS is powered for the first time.
	Input thresholds	[Normal mode] [Extended mode] Extended mode authorises lower input voltage (150 V) without transferring to battery. This can be used if the load can withstand low voltage supply.	Normal mode
	Sensitivity	[High] [Low] High: for sensitive equipment, UPS will easily transfer to battery when utility conditions are becoming bad. Low: for equipment that can withstand bad utility conditions, in that case, the UPS will not transfer to battery.	High
	Load segments - Auto start delay	[No Delay] [1 s] [2 s]…[65354 s] The equipment are powered with the specified delay.	Group 1: 3 s Group 2: 6 s

	Description	Available settings	Default settings
In/Out settings	Load segments - Auto shutdown delay	[Disable] [0s] [1 s] [2 s]…[65354 s] During a power outage, authorises to keep some equipment running while turning off other equipment. This feature allows to save battery power.	Group 1: Disable Group 2: Disable
	Overload pre-alarm	[5 %] [10 %] [15 %] [20 %] ... [100 %] [105 %] Gives a warning when a predefined critical percentage of load is reached.	[105 %]
ON/OFF settings	Cold start	[Disable] [Enable] Authorises the product to start on battery power.	Enable
	Forced reboot	[Disable] [Enable] If set to Enable, when a shutdown sequence is sent through communication port, it allows, if mains recovers during the sequence, to shutoff the output during 10 s.	Enable
	Auto restart	[Disable] [Enable] Authorises the product to restart automatically when mains recovers after a complete battery discharge.	Enable
	Energy saving	[Disable] [Enable] If Enable, UPS will shutdown after 5min of back-up time, if no load is detected on the output.	Disable
	Sleep mode	[Disable] [Enable] If disable, LCD and communication will turn OFF immediately after UPS is OFF. If enable, LCD and communication stays ON 1h30 min after UPS is OFF.	Disable
	Remote command	[Disable] [Enable] If enable, shutdown or restart commands from software are authorised.	Enable
Battery settings	Automatic battery test	[No test] [Every day] [Every week] [Every month] Available only if battery charge mode is set to constant charge.	Every week (in constant charge, otherwise following ABM battery test method)
	Low battery warn-ing	[10 %] [20 %] [30 %] [40 %] [50 %] [60 %] [70 %] [80 %] [90 %] The alarm triggers when the set percentage of battery capacity is reached during a back-up time.	20 %
	Restart battery level	[10 %] [20 %] [30 %] [40 %] [50 %] [60 %] [70 %] [80 %] [90 %] [100 %] If set, automatic restart will occur only when percentage of battery charge is reached.	0 %
	Battery charge mode	[ABM cycling] [Constant charge]	ABM cycling
	EBM number setting	[0] [1] [2] [3] [4] Using standard EBM, UPS detects automatically the amount of EBM connected.	EBM automatic detection, otherwise 0
	Deep discharge protection	[Yes] [No] If set to Yes, the UPS automatically prevents battery from deep discharge by adapting end of back-up time voltage threshold.	Yes

3.1 Unpacking and contents check

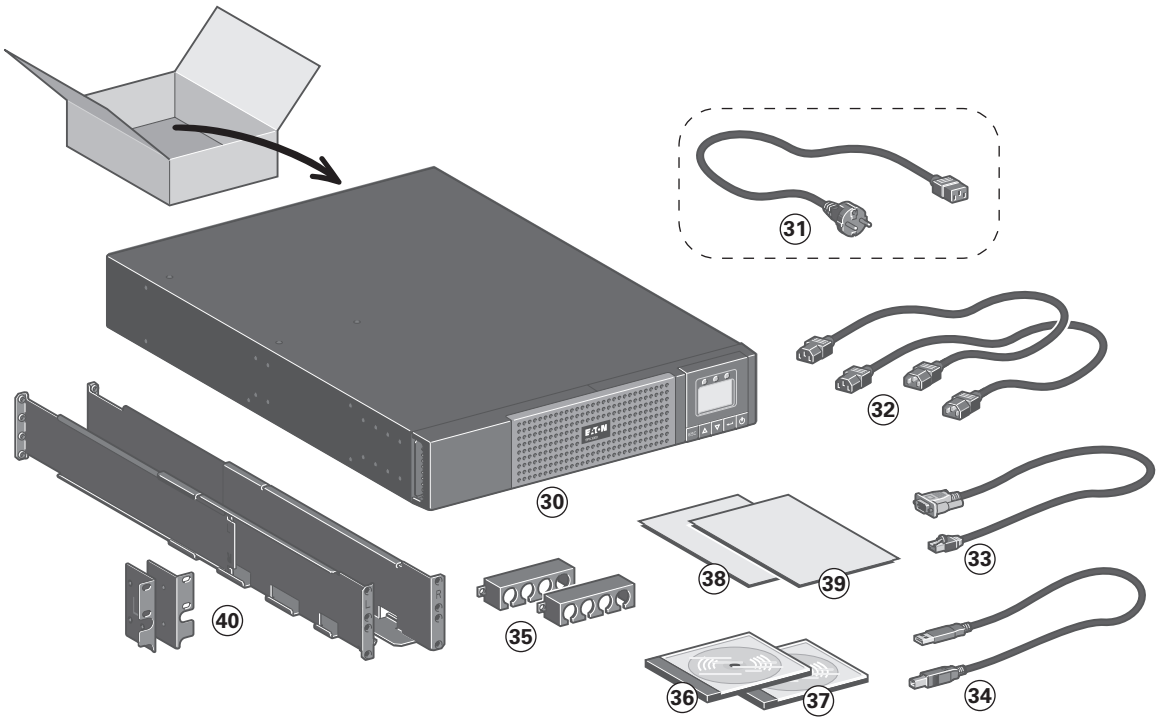

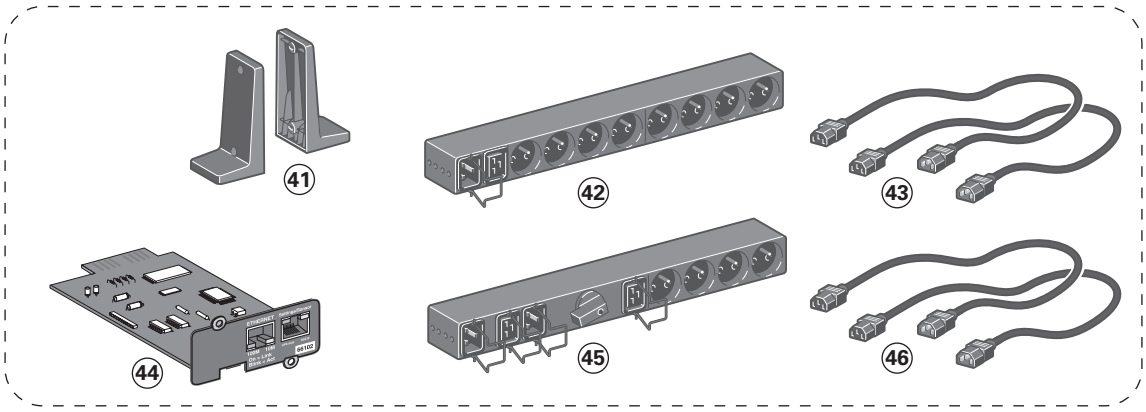

(30) 5PX UPS

(31) connection cable to AC-power source (**5PX 2200** and **3000** models only)

(32) 2 connection cables for the protected equipment

(33) RS232 communication cable

(34) USB communication cable

(35) 2 cable locking systems

(36) **Software** CD-ROM

(37) Manual CD-ROM

(38) Safety instructions

(39) Quick start

(40) Mounting kit for 19-inch enclosures

Elements supplied depending on the version or optional

(41) 2 supports for tower position (RT 2U version only)

(42) **FlexPDU** module (optional)

(43) connection cable between **FlexPDU** module and UPS

(44) **NMC** communication card (optional, standard on Netpack versions)

(45) **HotSwap MBP** module (optional)

(46) connection cables between **HotSwap MBP** module and UPS

Packing materials must be disposed of in compliance with all local regulations concerning waste. Recycling symbols are printed on the packing materials to facilitate sorting.

3. Installation

3.2 Installation in tower position

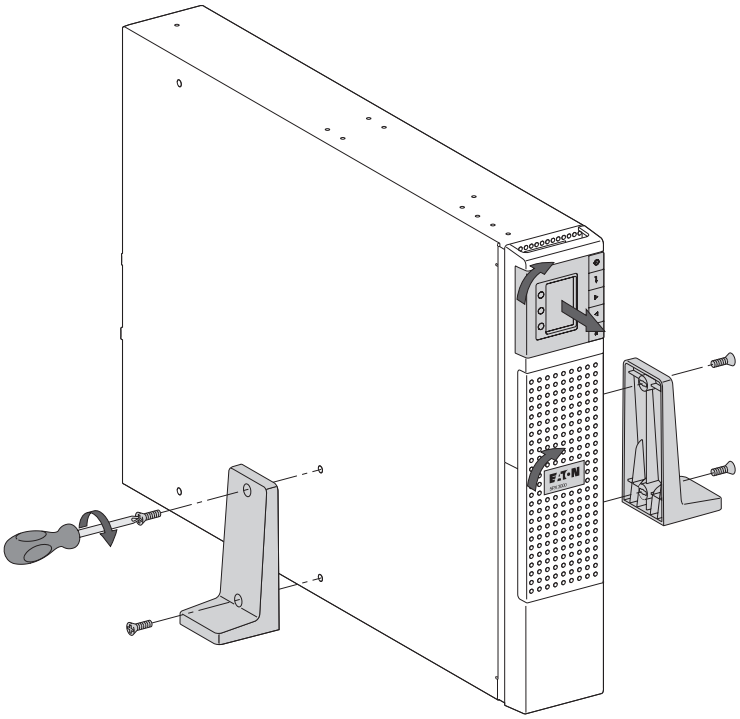

Note. The two supports for the tower position are used on the RT 2U version only.

3.3 Installation in rack position

Follow steps 1 to 4 for module mounting on the rails.

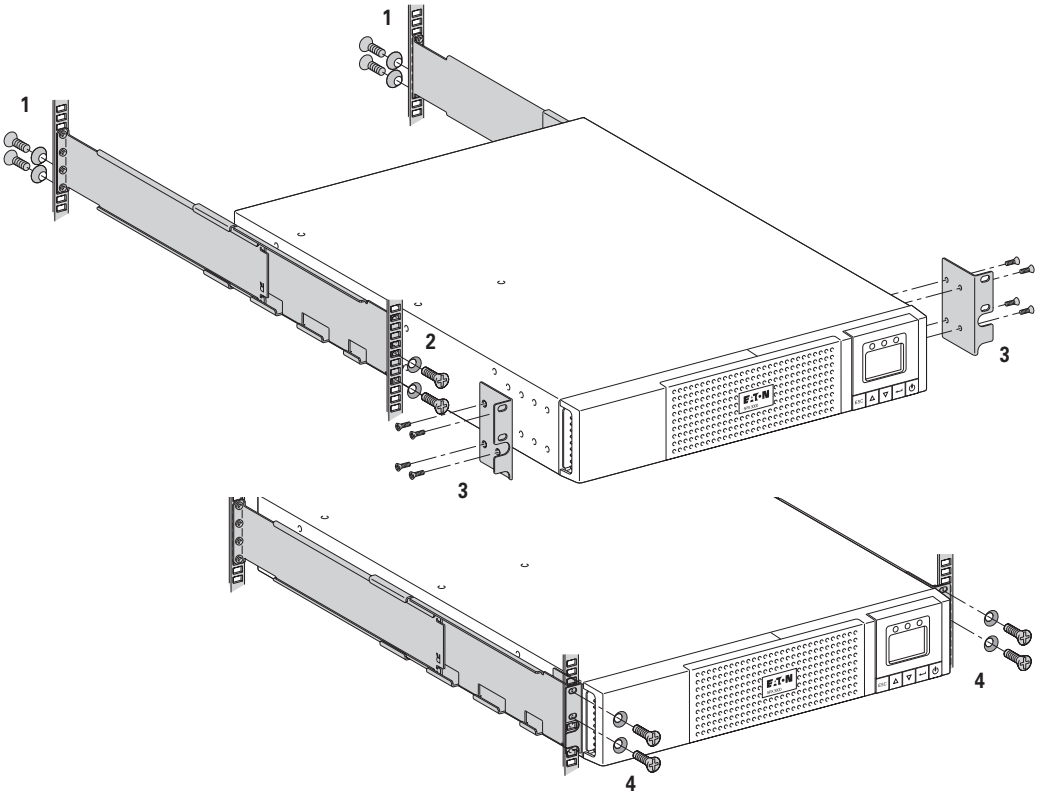

The rails and necessary hardware are supplied by EATON.

3.4 Communication ports

Connection of RS232 or USB communication port (optional)

The RS232 and USB communication ports cannot operate simultaneously.

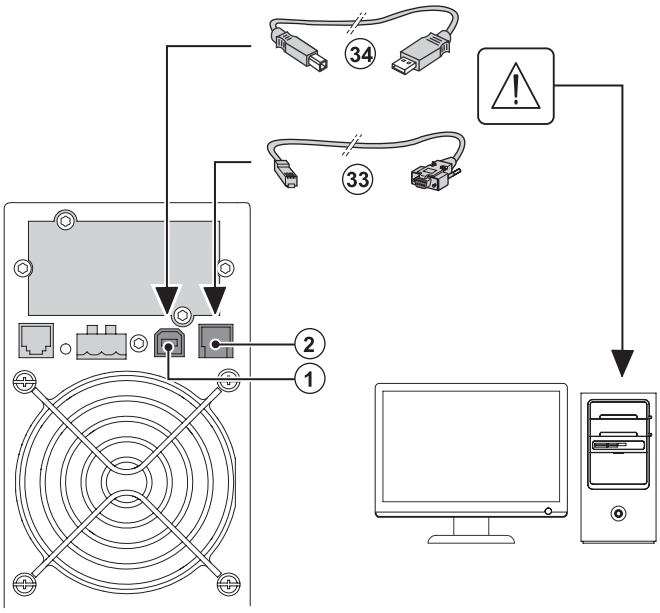

1. Connect the RS232 **(33)** or USB **(34)** communication cable to the serial or USB port on the computer equipment.

2. Connect the other end of the communication cable **(33)** or **(34)** to the USB **(1)** or RS232 **(2)** communication port on the UPS.

The **UPS** can now communicate with EATON power management software.

Installation of the communication cards (optional, standard on the Netpack versions)

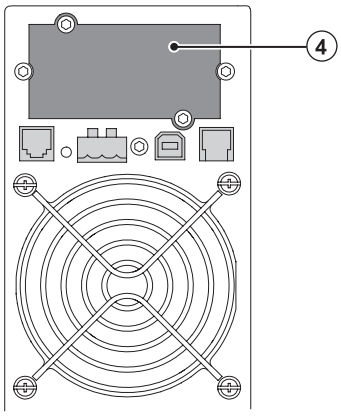

It is not necessary to shutdown the UPS before installing a communication card.

1. Remove the slot cover **(4)** secured by screws.
2. Insert the communication card in the slot.
3. Secure the card cover with the 2 screws.

Characteristics of the contact communication port (optional)

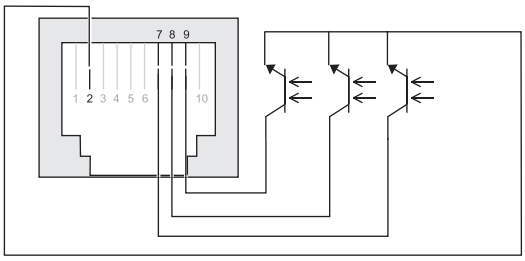

- Pins 1, 3, 4, 5, 6, 10: not used
- Pin 2: common (user)
- Pin 7: low battery
- Pin 8: operation on battery power
- Pin 9: UPS ON, equipment supplied

n.o.: normally open contact

When a signal is activated, the contact is closed between the common (pin 2) and the pin for the corresponding signal.

Contact characteristics (optocoupler)

- Voltage: 48 V DC max
- Current: 25 mA max
- Power: 1.2 W

3. Installation

3.5 Connection with a FlexPDU (Power Distribution Unit) module (optional)

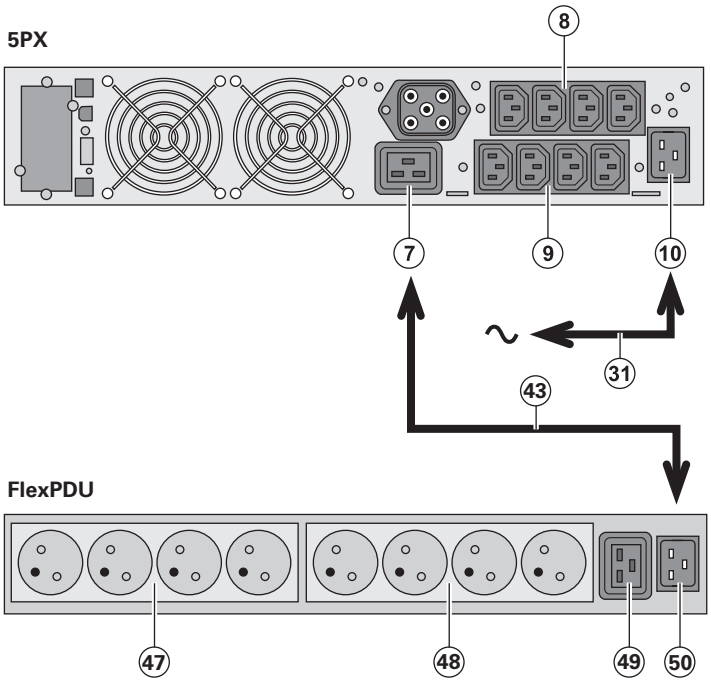

1. **5PX 2200i / 3000i**: connect the UPS input socket **(10)** to the AC-power source using the cable **(31)** supplied.
   5PX 1500i / 2000i: use the power cable of the protected equipment.
2. **5PX 2200i / 3000i**: connect the input socket on the **FlexPDU module (50)** to the UPS outlet **(7)** using the cable **(43)** supplied.
   5PX 1500i / 2000i: connect the input socket on the **FlexPDU module (50)** to one of the outlets **(9)**.
   The cable and the connectors are marked in red.
3. Connect the equipment to the outlets **(47)**, **(48)** and **(49)** on the **FlexPDU module**. These outlets differ, depending on the version of the **FlexPDU module**.
4. Fit the connection securing system that prevents the plugs from being pulled out accidentally.

3.6 Connection with a HotSwap MBP module (optional)

The **HotSwap MBP** module makes it possible to service or even replace the UPS without affecting the connected loads (**HotSwap** function).

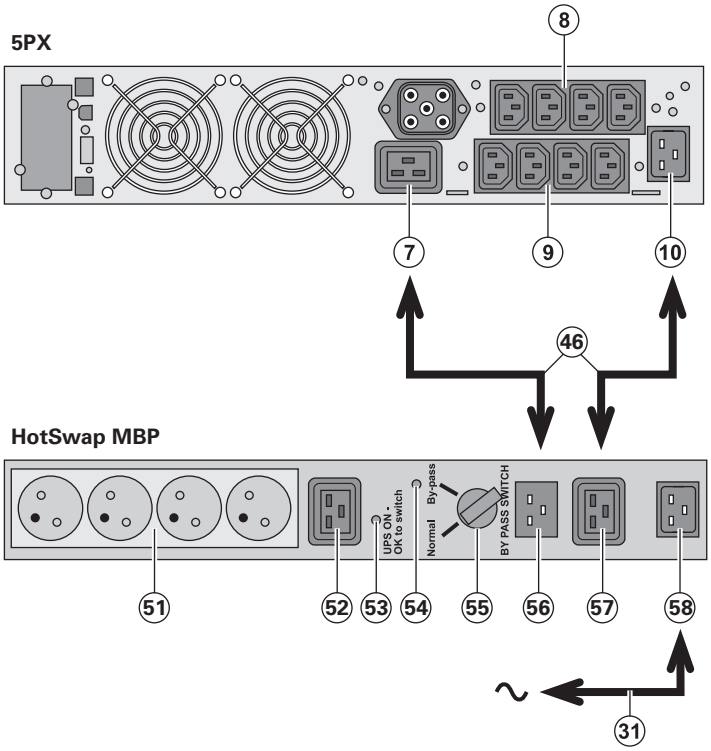

1. Connect the input socket **(58)** on the **HotSwap MBP** module to the AC-power source using the cable **(31)** supplied.
2. Connect the UPS input socket **(10)** to the "UPS Input" **(57)** on the **HotSwap MBP** module, using the cable **(46)** supplied. These cables and the connectors are marked blue.
3. Connect the UPS outlet **(7)** to the "UPS Output" **(56)** on the HotSwap MBP module, using the cable **(46)** supplied.
   5PX 1500i: connect one of the UPS outlets **(9)** to the "UPS Output" **(56)** on the **HotSwap MBP** module.
   These cables and the connectors are marked in red.
4. Connect the equipment to the outlets **(51)** and **(52)** on the **HotSwap MBP** module. These outlets differ, depending on the version of the **HotSwap MBP** module.

   Caution. Do not use UPS outlets (8) and (9) to supply equipment because use of switch (55) on the HotSwap MBP module would cut supply to the equipment.

HotSwap MBP module operation

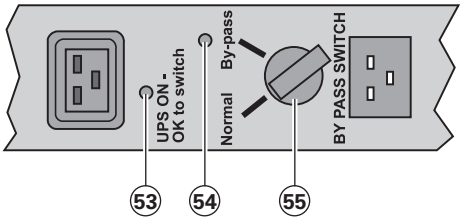

The HotSwap MBP module has a rotary switch **(55)** with two positions:

Normal the load is supplied by the UPS, LED **(53)** is on.

Bypass the load is supplied directly by the AC-power source. LED **(54)** is on.

UPS start-up with the HotSwap MBP module

1. Check that the UPS is correctly connected to the **HotSwap MBP** module.
2. Set switch **(55)** to Normal position.
3. Start the UPS by pressing the ON/OFF button ⏻ on the UPS control panel.
The load is supplied by the UPS.
LED **(53)** "UPS ON - OK to switch" on the **HotSwap MBP** module goes ON.

HotSwap MBP module test

1. Set switch **(55)** to Bypass position and check that the load is still supplied.
2. Set switch **(55)** back to Normal position.

3.7 UPS connection without a FlexPDU or HotSwap MBP module

Check that the indications on the name plate located on the back of the UPS correspond to the AC-power source and the true electrical consumption of the total load.

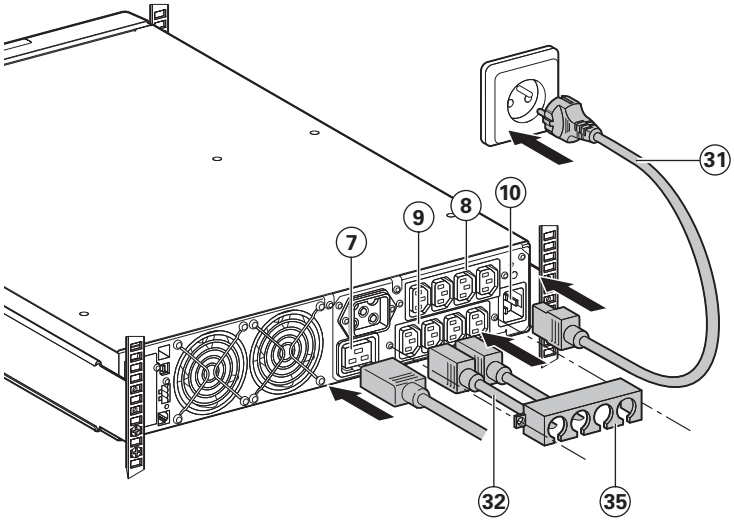

1. 5PX 1500i / 2000i: connect the UPS input socket **(10)** to the AC-power source using the cable of the protected equipment.
5PX 2200i / 3000i: connect the supplied cable **(31)** (250 V - 16 A) to the socket **(10)**, then to the AC-power source.

2. Connect the loads to the UPS using the cables **(32)**.
It is preferable to connect the priority loads to the four outlets marked **(9)** and the non-priority loads to the four outlets marked **(8)** that can be programmed in pairs (1 and 2).
For the **5PX 2200i / 3000i** models, connect any high-power devices to the 16 A outlet **(7)**.

To program shutdown of outlets **(8)** during operation on battery power and thus optimise the available backup time, please check the in/out settings.

3. Fit the connection securing system **(35)** that prevents the plugs from being pulled out accidentally.

Note. The UPS charges the battery as soon as it is connected to the AC-power source, even if ⏻ button is not pressed.
Once the UPS is connected to the AC-power source, eight hours of charging are required before the battery can supply the rated backup time.

4. Operation

4.1 Start-up and Normal operation

To start the UPS:

1. Verify that the UPS power cord is plugged in.
2. The UPS front panel display illuminates and shows EATON logo.
3. Verify that the UPS status screen shows ⏻.
4. Press the ⏻ button on the UPS front panel for at least 2 seconds.
   The UPS front panel display changes status to "UPS starting...".
5. Check the UPS front panel display for active alarms or notices. Resolve any active alarms before continuing. See "Troubleshooting" on page 18.
   If the ⚠ indicator is on, do not proceed until all alarms are clear. Check the UPS status from the front panel to view the active alarms. Correct the alarms and restart if necessary.
6. Verify that the ∿ indicator illuminates solid, indicating that the UPS is operating normally and any loads are powered and protected.
   The UPS should be in Normal mode.

4.2 Starting the UPS on Battery

Before using this feature, the UPS must have been powered by utility power with output enabled at least once.
Battery start can be disabled. See the "Cold start" setting in "ON/OFF Settings" on page 10.

To start the UPS on battery:

1. Press the ⏻ button on the UPS front panel until the UPS front panel display illuminates and shows a status of "UPS starting...".
   The UPS cycles through Standby mode to Battery mode. The ▭ indicator illuminates solid.
   The UPS supplies power to your equipment.
2. Check the UPS front panel display for active alarms or notices besides the "Battery mode" notice and notices that indicate missing utility power. Resolve any active alarms before continuing.
   See "Troubleshooting" on page 18.
   Check the UPS status from the front panel to view the active alarms. Correct the alarms and restart if necessary.

4.3 UPS Shutdown

To shut down the UPS:

1. Press the ⏻ button on the front panel for three seconds.
   The UPS starts to beep and shows a status of "UPS shutting OFF...". The UPS then transfers to Standby mode, and the ∿ indicator turns off.

4.4 Operation on Battery Power

Transfer to battery power

- The connected devices continue to be supplied by the UPS when AC input power is no longer available. The necessary energy is provided by the battery.
- The ∿ and ▭ indicator illuminates solid.
- The audio alarm beeps every ten seconds.

The connected devices are supplied by the battery.

Low-battery warning

- The ∿ and [+-] indicator illuminates solid.
- The audio alarm beeps every three seconds.

The remaining battery power is low. Shut down all applications on the connected equipment because automatic UPS shutdown is imminent.

End of battery backup time

- LCD displays "End of backup time".
- All the LEDs go OFF.
- The audio alarms stops.

4.5 Return of AC Input Power

Following an outage, the UPS restarts automatically when AC input power returns (unless the restart function has been disabled) and the load is supplied again.

4.6 UPS remote control functions

5PX offers a choice between two remote control functions.

- **RPO**: **R**emote **P**ower **O**ff allow a remote contact to be used to disconnect all the equipment connected to the UPS. Restarting the UPS requires manual intervention.
- **ROO**: **R**emote **O**N/**O**FF allows remote action of button ⏻ to shut down the UPS.

These functions are obtained by opening a contact connected between the appropriate pins of connector **(5)** on the rear panel of the UPS (see figures below).

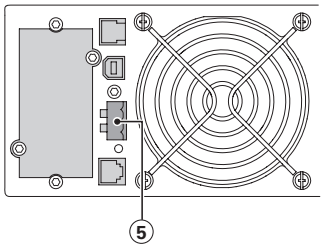

Remote control connection and test

1. Check that the UPS is OFF and disconnected from the AC input source.
2. Remove connector **(5)** after unscrewing the screws.
3. Connect a normally closed volt-free contact (60 V DC / 30 V AC max., 20 mA max., 0.75 mm² cable cross-section) between the two pins of connector **(5)** (see diagram).

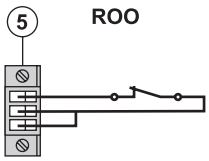

Contact open: UPS shutdown
Contact closed: UPS start-up (UPS connected to AC power and AC power is available)

Note. The local ON/OFF control using button ⏻ overrides the remote-control function.

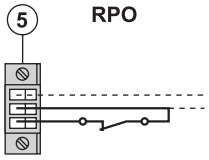

Contact open: UPS shutdown, LED ⚠ goes ON.
To return to normal operation, deactivate the remote external contact and restart the UPS by pressing button ⏻.

4. Plug connector **(5)** into the back of the UPS.
5. Connect and restart the UPS following the previously described procedures.
6. Activate the external remote shutdown contact to test the function.

Warning. This connector must only be connected to SELV (Safety Extra-Low Voltage) circuits.

5. Maintenance

5.1 Troubleshooting

Operation status	Possible cause	Action
Batteries disconnected	The UPS does not recognise the internal batteries	If the condition persists, contact your service representative
	The batteries are disconnected	Verify that all batteries are properly connected. If the condition persists, contact your service representative.
Overload	Power requirements exceeds the UPS capacity (greater than 105 % of nominal)	Remove some of the equipment from the UPS. The UPS continues to operate, but may shutdown if the load increases. The alarm resets when the condition becomes inactive.
End of battery life	The end of the battery life is reached.	Contact your service representative for battery replacement.
Event	An UPS event occurs	
	Example: Remote Power OFF, the RPO contact has been activated to shutdown the UPS and now prevents restart.	Set the contact back to its normal position and press ⏻ button to restart.
UPS fault	An internal failure occured with the UPS	The UPS does not protect the equipment anymore. **Note.** the alarm message and the UPS Serial Number, then contact your service representative.

Troubleshooting a UPS equipped with the HotSwap MBP module

	Indication	Diagnostic	Correction
1	The load is no longer supplied when the rotary switch **(55)** on the **HotSwap MBP** module is set to Bypass position.	● The protected devices are connected to the UPS output instead of to the **HotSwap MBP** module. ● The AC-power cord is connected to the UPS input instead of to the **HotSwap MBP** module.	Check the wiring between the UPS and the **HotSwap MBP** module (see section 3.6).
2	The load is no longer supplied when the rotary switch **(55)** on the **HotSwap MBP** module is set to Normal position.	● The UPS is shut down. ● The wiring between the UPS and the **HotSwap MBP** module is incorrect.	● Start the UPS. ● Check the wiring between the UPS and the **HotSwap MBP** module (see section 3.6).
3	The load is no longer supplied after AC-power fails.	● The rotary switch **(55)** on the **HotSwap MBP** module is set to Bypass position. ● The wiring between the UPS and the **HotSwap MBP** module is incorrect.	● Set the rotary switch **(55)** on the **HotSwap MBP** module to Normal position. ● Check the wiring between the UPS and the **HotSwap MBP** module (see section 3.6).

5.2 Battery-module replacement

Safety recommendations

The battery can cause electrocution and high short-circuit currents. The following safety precautions are required before servicing the battery components:

- remove watches, rings, bracelets and all other metal objects from the hands and arms,
- use tools with an insulated handle.

Battery-tray removal

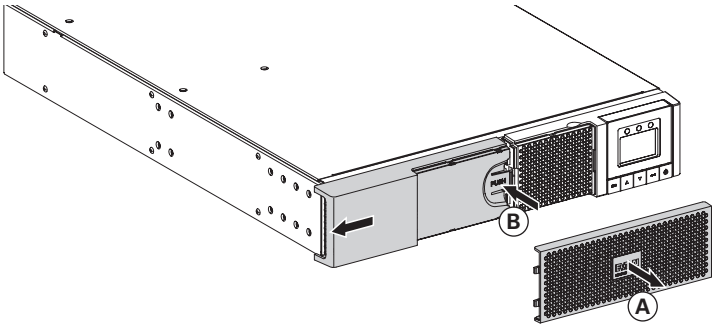

A - Remove the middle part.

B - Remove the left-hand side of the front panel by pushing the button and then by sliding the part.

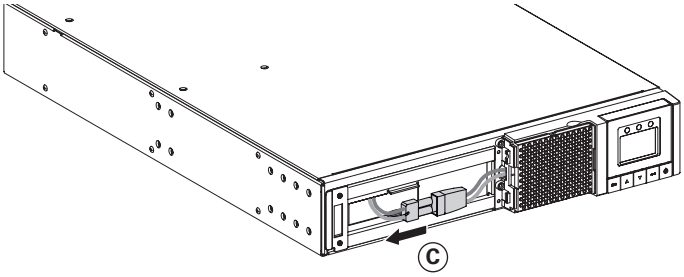

C - Disconnect the battery block by separating the two connectors (never pull on the wires).

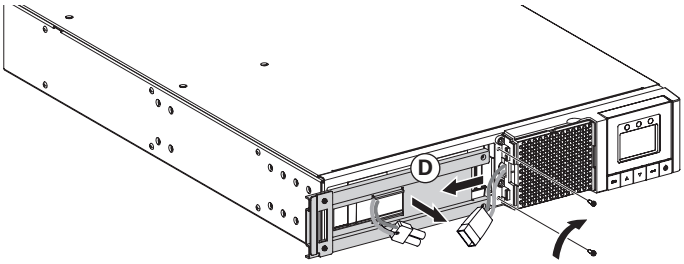

D - Remove the metal protection cover in front of the battery (two screws).

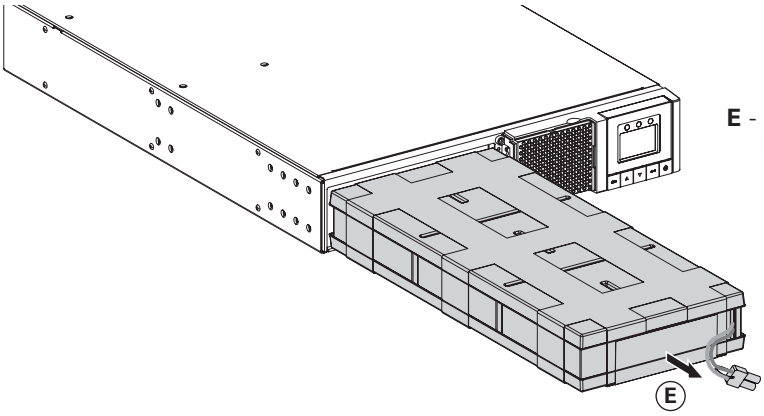

E - Pull the plastic tab to remove the battery block and replace it.

5. Maintenance

Mounting the new battery module

Carry out the above instructions in reverse order.

- **To ensure safety and high performance, use only batteries supplied by EATON.**
- **Take care to firmly press together the two parts of the connector during remounting.**

5.3 Maintenance on a UPS equipped with the HotSwap MBP module

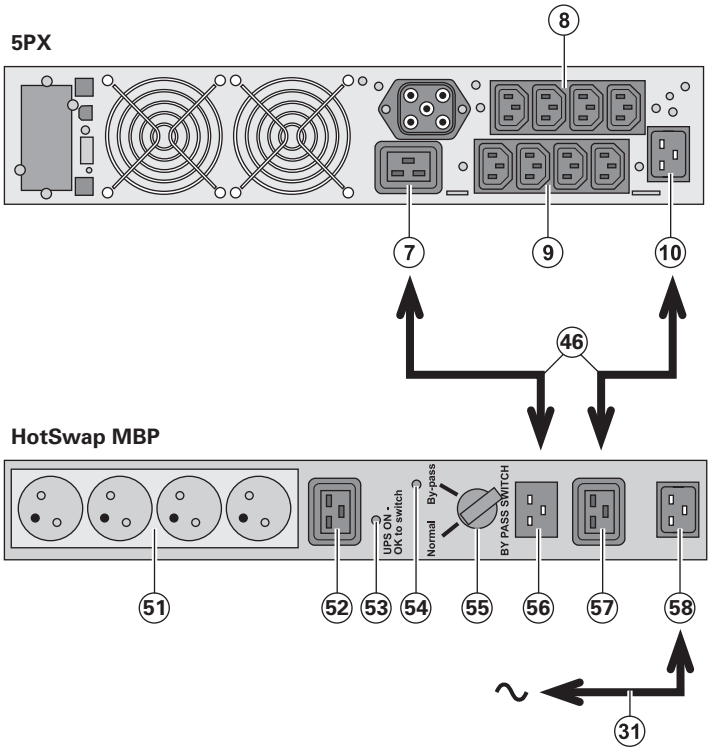

The **HotSwap MBP** module makes it possible to service or even replace the UPS without affecting the connected loads (**HotSwap** function).

Maintenance

1. Set switch **(55)** to Bypass position. The red LED on the **HotSwap MBP** module goes ON, indicating that the load is supplied directly with AC input source power.
2. Stop the UPS by pressing the ⏻ button on the UPS control panel. LED **(53)** "UPS ON - OK to switch" goes OFF, the UPS can now be disconnected and replaced.

Return to normal operation

1. Check that the UPS is correctly connected to the **HotSwap MBP** module.
2. Start the UPS by pressing the ⏻ button on the UPS control panel. LED **(53)** "UPS ON - OK to switch" on the **HotSwap MBP** module goes ON (otherwise, there is a connection error between the **HotSwap MBP** module and the UPS).
3. Set switch **(55)** to Normal position. The red LED on the **HotSwap MBP** module goes OFF.

6. Appendices

6.1 Technical specifications

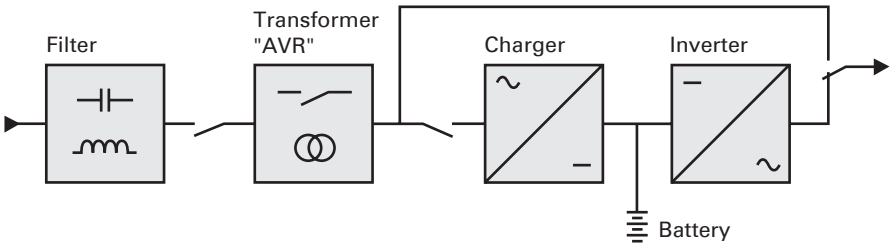

	5PX 1500i RT2U	5PX 2000i RT2U	5PX 2200i RT2U	5PX 3000i RT2U	5PX 3000i RT3U
Output Power	1500 VA 1350 W	2000 VA 1800 W	2200 VA 1980 W	3000 VA 2700 W	3000 VA 2700 W
AC Input power ● Rated input voltage ● Input voltage range ● input frequency range	Single phase 200-240 V 160 to 294 V (1) 47 to 70 Hz (50 Hz system), 56.5 to 70 Hz (60 Hz system) (2)				
Output on battery power ● Voltage ● Frequency	230 V (-10/+6 %) (3) 50/60 Hz ±0.1 Hz				
Battery **(sealed lead acid, maintenance free)** ● Standard	4 x 12 V 7.2 Ah	4 x 12 V 9 Ah		6 x 12V 9Ah	
● Additional modules possible (up to 4 EBM)	5PX EBM 48V RT2U (4)			5PX EBM 72 V RT2U (5)	5PX EBM 72 V RT3U (5)
Environnement ● Operating temperature range ● Storage temperature range ● Relative humidity ● Noise level	0 to 40 °C -15 to +50 °C 20 to 90 % (without condensation)				
	< 45 dBA			< 50 dBA	

(1) *The high and low thresholds can be adjusted using UPS settings (up to 150-294 V).*
(2) *Up to 40 Hz in low -sensitivity mode (programmable using UPS settings).*
(3) *Adjustable to 200/208/220/230/240 V (23 % derating at 200 V, and 10 % derating at 208 V on 2.2 kVA, 17 % derating at 200 V on 3 kVA)*
(4) ***5PX EBM 48V RT2U****: 2 strings, each 4 x 12 V / 9 Ah.*
(5) ***5PX EBM 72V RT2U*** *and* ***5PX EBM 72V RT3U****: 2 strings, each 6 x 12 V / 9 Ah.*

When the appliance is used in EU area, use an external circuit breaker in front of line with rating 16 A, 250 V which is IEC/EN 60898-1 standard compliant;

When the appliance is used in America area, use an external circuit breaker in front of line with rating 20 A, 250 V.

This product is designed for IT power distribution system.

6. Appendices

6.2 Glossary

Backup time	Time during which the load can be supplied by the UPS operating on battery power.
Battery test	Internal UPS test to check battery status.
Cold start	The devices connected to the UPS can be started even if AC input power is not available. The UPS operates on battery power alone.
Deep discharge	Battery discharge beyond the permissible limit, resulting in irreversible damage to the battery.
FlexPDU	Module with UPS outlets for installation in a bay. There are different modules with different types of outlets.
HotSwap MBP	UPS manual-bypass module for maintenance. There are different modules with different types of outlets.
Load	Devices or equipment connected to the UPS output.
Low-battery warning	This is a battery-voltage level indicating that battery power is low and that the user must take action in light of the imminent break in the supply of power to the load.
Normal AC input	The AC-power line supplying the UPS under normal conditions.
Percent load	Ratio of the power effectively drawn by the load to the maximum output of the UPS.
Personalisation	It is possible to modify certain UPS parameters set in the factory. Certain UPS functions can also be modified by the software to better suit user needs.
Programmable outlets	Controllable outlets for automatic load shedding, remote shutdown and sequential restart (personalised using software).
UPS	Uninterruptible Power System.
UPS ON/OFF controlled by software	This function enables or disables initiation of UPS ON/OFF control sequences by computer power-management software.