Superior Clamping and Gripping

Product Information

Magnetic gripper EMH

Compact. Strong. Fast.
Magnetic gripper EMH

Electro-permanent magnetic gripper for energy-efficient handling of ferromagnetic workpieces with integrated electronics and feedback function

Field of application

Universal compact gripper for large diversity of parts in clean to slightly contaminated work environment

Advantages – Your benefits

High holding forces at lowest space for reliable part handling in compact machines

Integrated electronics Compact design, as no additional controller is required

Low weight for high dynamics in challenging applications

Reliable holding force maintenance to ensure process reliable operation even in scenarios with emergency stop

The gripping force can be adjusted in four stages ensures gripping of various workpieces

Control via 24 V power supply saves energy and simplifies the connection and the wiring

Workpiece accessibility from five sides free from interfering contours by unnecessary gripper fingers

Response on magnetization condition and workpiece presence saves time and simplifies the programming

NEW: Sizes EMH-MP and EMH-DP as a solution for special requirements

Sizes	Weight	Max. workpiece weight	Max. magnetic surface
Quantity: 6	1 .. 8 kg	70 kg	81.97 cm²

Functional description

The function of the magnetic gripper bases on the combination of AlNiCo and neodymium magnets. The magnetic flux of the AlNiCo magnets passes the neodymium magnet in the deactivated state, and closes the magnetic circuit over the gripper base body made of steel. To activate the system, an electric current pulse is conducted through the coil, which reverses the polarity of the AlNiCo magnets accordingly.

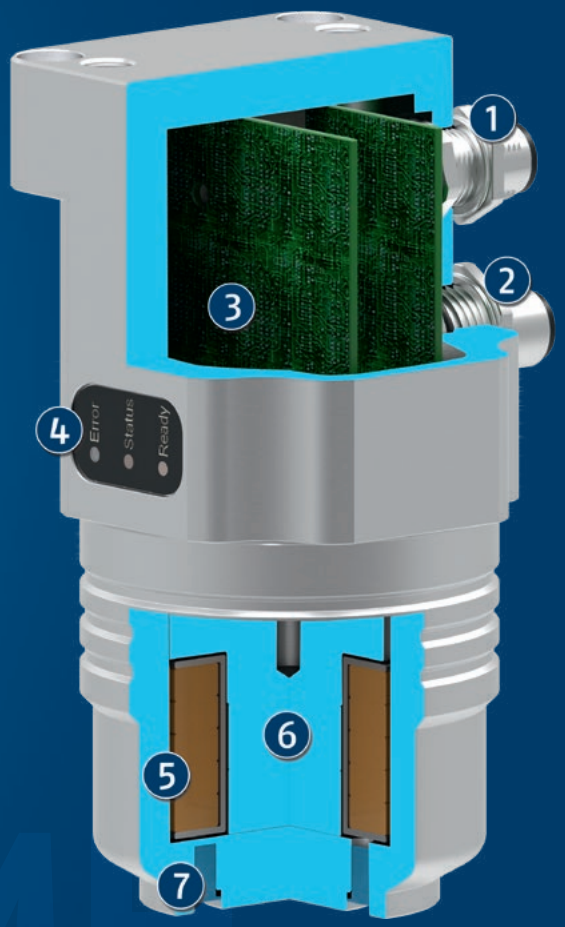

① **Connecting plug for PLC**
communication via digital I/O

② **Connection plug**
for power supply

③ **Control electronics**
integrated control and power electronics

④ **LED display**

⑤ **Copper coil**
for pole reversal of the AlNiCo-magnets

⑥ **Polarity reversible AlNiCo-magnet**
surrounded by an electromagnetic coil

⑦ **Non-pole reversing neodymium permanent magnets**
lead the magnetic flux via the workpiece

Detailed functional description

Component presence

The presence sensor detects the presence of a component. After magnetization, an internal sensor measures the change in the magnetic field. After exceeding a corresponding threshold value, the presence of the workpiece is output.

1. Magnetic gripper EMH RP
2. Workpiece
3. Magnetic field lines

Process reliability

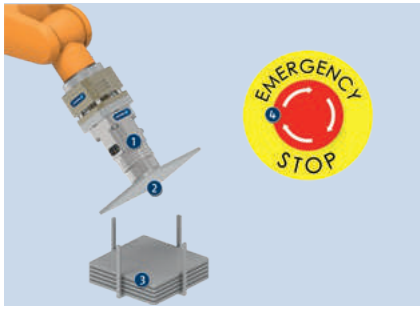

The EMH magnetic gripper ensures safe and reliable operation. By changing the polarity of the permanent magnets through short current pulse, the magnetic gripper remains in the selected status, even in case of a power failure or emergency stop.

1. Magnetic gripper EMH RP
2. Workpiece
3. Sheet metal stack
4. Emergency stop

Gripping of round components

The EMH magnetic grippers can also be equipped with pole extensions to suit the workpiece. Special pole extensions are available for round components, for example, with prismatic or even with concave contours. The pole extensions are supplied with mounting material.

1. Magnetic gripper EMH MP
2. PVL pole extension
3. Workpiece

Variable holding force control

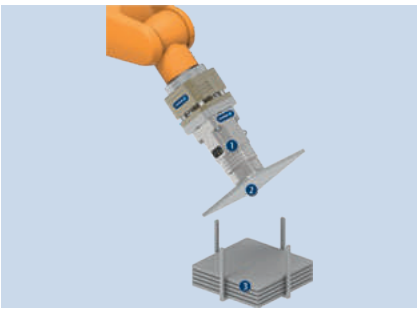

The gripping force can be adjusted in four stages via digital inputs. These enable the gripping and separation of a wide variety of workpieces.Stage 1: 15% holding forceStage 2: 25% holding forceStage 3: 35% holding forceStage 4: 100% holding force

1. Magnetic gripper EMH RP
2. Workpiece
3. Sheet metal stack

General notes about the series

Operating principle: Magnetization of permanent magnets

Housing material: Aluminum/steel

Base jaw material: Steel

Actuation: Electrical current pulse for activation and deactivation of the system

Warranty: 24 months

Service life characteristics: on request

Scope of delivery: Assembly and Operating Manual with Declaration of Incorporation, centering sleeves

Layout or control calculation: Verifying the sizing of the selected unit is necessary, since otherwise overloading can result. Please contact us for assistance.

Activation time: The activation time is the time required to reverse the polarity of the permanent magnets.

Ambient conditions: The modules are primarily designed for the use in clean to slightly contaminated environments. Please note that the life time of the modules can shorten if they are used in harsh ambient conditions, and that SCHUNK cannot assume liability in such cases.

Application example

Magnetic gripping unit for separating and handling of sheets.

1. Magnetic gripper EMH
2. Compensation Unit AGE-Z

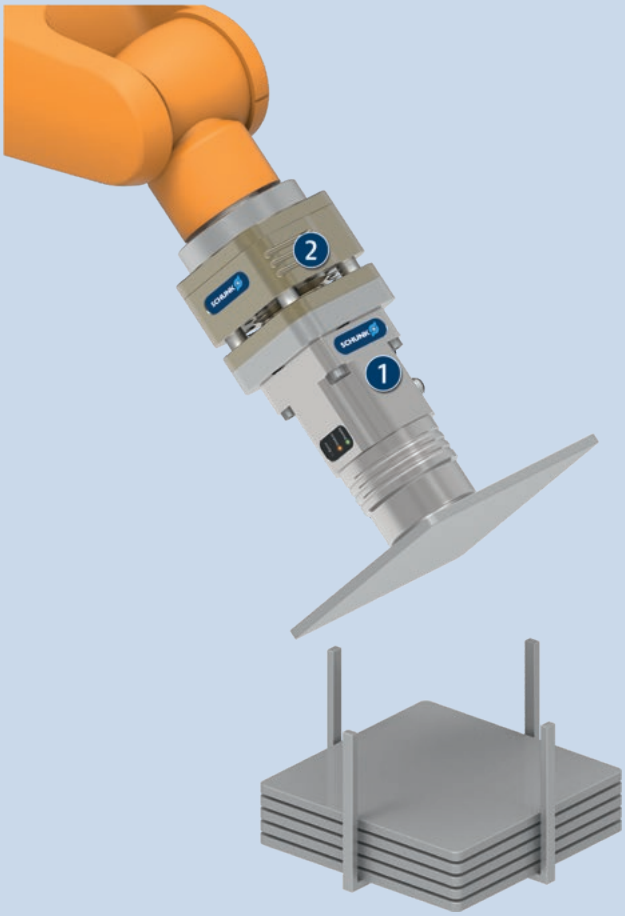

SCHUNK offers more ...

The following components make the product even more productive – the suitable addition for the highest functionality, flexibility, reliability, and controlled production.

Compensation unit

Tolerance compensation unit

Quick change system

Pole Extensions

Connection cables

ⓘ For more information on these products can be found on the following product pages or at schunk.com.

Options and special information

Pole extension: The use of pole extensions alters the magnetic flux and can affect the holding force if incorrectly designed. Pole extensions also affect component detection. Workpieces may no longer be detected.
Heating: Each activation increases the internal temperature of the product. Overheating reduces the magnetic characteristics and can destroy the product. The number of activations per minute must be adjusted so that the maximum permissible product temperature is not reached.
Material dependence: The product is designed to hold almost all ferromagnetic materials. The achievable holding force depends, among other things, on the respective workpiece material. Accordingly, with some ferromagnetic materials a reduction in the nominal holding force can be expected.
Material efficiency: Conventional steel (Fe 360) 100%, ferromagnetic crude steel (10-C15) 90%, tool, case-hardened and sectional steels 70 - 80%, magnetic stainless steel 65%, cast iron 50%
Magnetic field evaluation: Due to occupational safety and the danger from electromagnetic fields, the EMH was subjected to a magnetic field evaluation. For more information, please contact us.

Ordering example

EMH - RP - 036 - B

Description
EMH

Magnet type
RP = Round pole
MP = Multipole
DP = dual pole

Size
036
045
060
080
084
114

General
B = Basic

EMH RP 036

Magnetic gripper

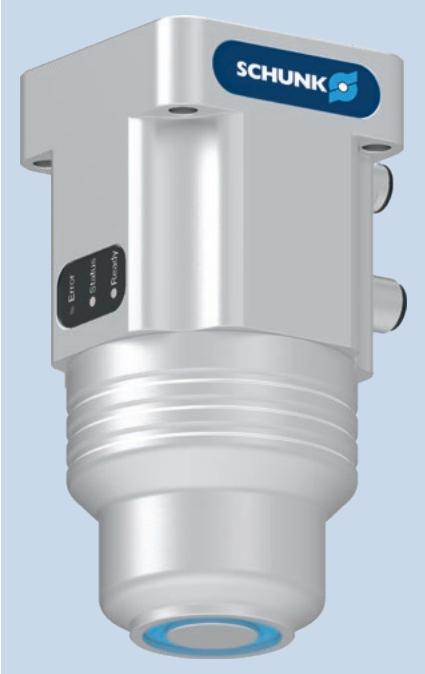

Workpiece thickness

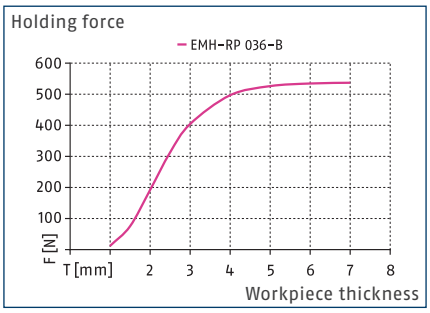

Air gap

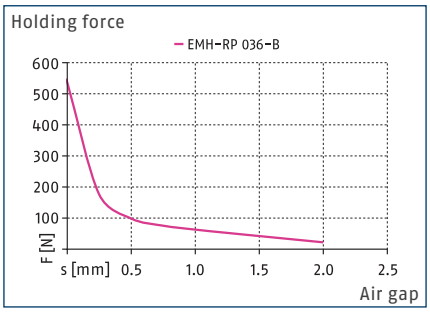

Dimensions and maximum loads

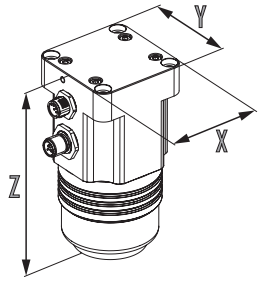

For values see technical data table

Technical data

Description		EMH-RP 036-B
ID		1351485
General operating data		
Holding force	[N]	530
Magnet area	[cm²]	6.08
Payload for horizontal magnet surface	[kg]	8.5
Payload for vertical magnet surface	[kg]	3.5
Module temperature increasement in case of 5/15 activations/minute	[°C]	10/25
Activation time	[ms]	300
Min./max. ambient temperature	[°C]	5/50
Mechanical operating data		
Weight	[kg]	1
IP protection class		52
Electrical operating data		
Nominal voltage	[V]	24
Type of voltage		DC
Max. current power	[A]	3.1
Rated current logic	[A]	0.15
Controller electronics		integrated
Dimensions X x Y x Z	[mm]	64 x 64 x 128

Main view EMH-RP 036

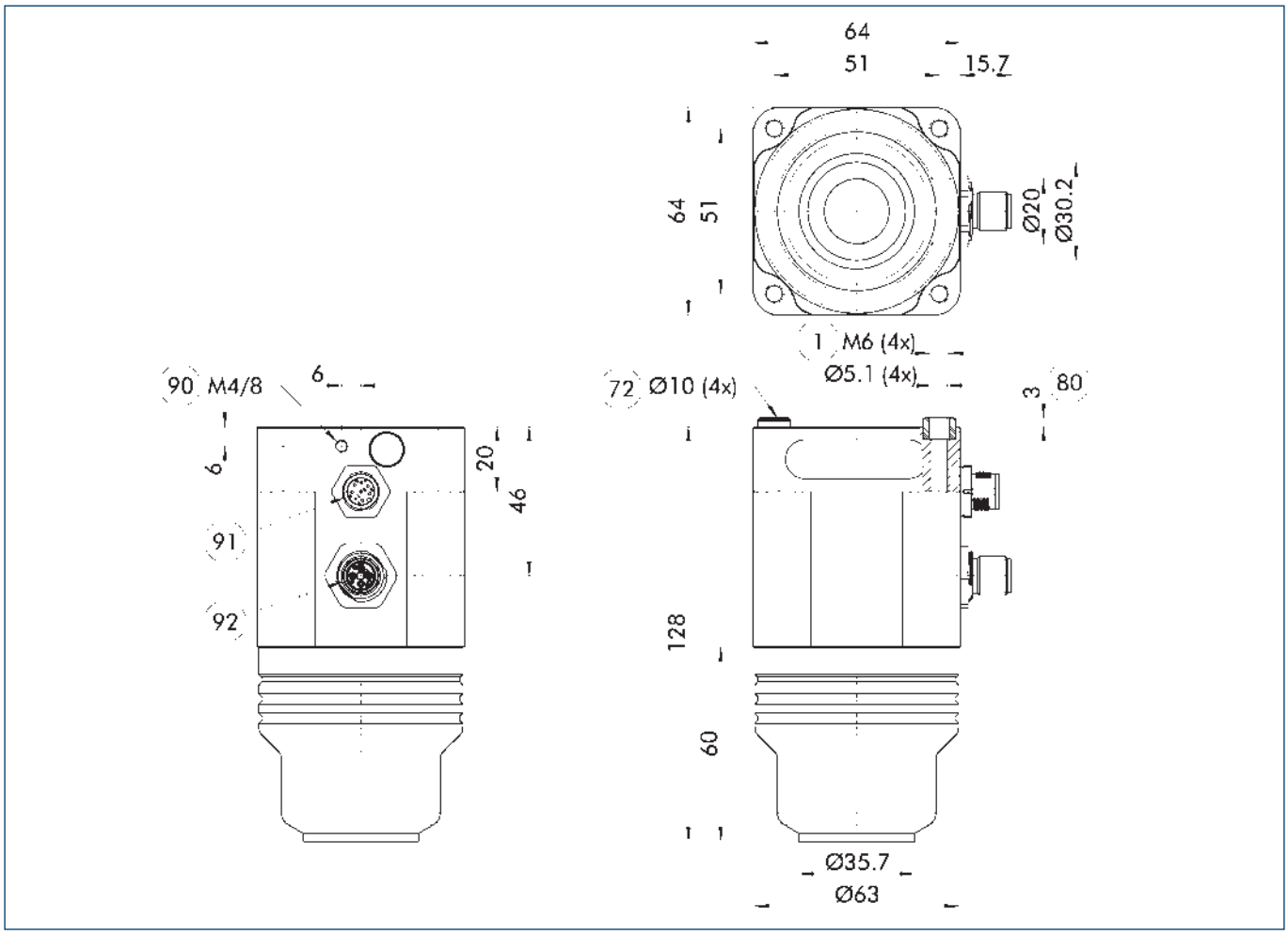

The drawing shows the magnet gripper in basis configuration, without any additional accessories.

- (1) Gripper connection
- (72) Fit for centering sleeves
- (80) Depth of the centering sleeve hole in the counter part
- (90) Functional ground
- (91) M12-socket, 8-pin (activation)
- (92) M12 connector, T-coded (voltage supply)

Increase in temperature

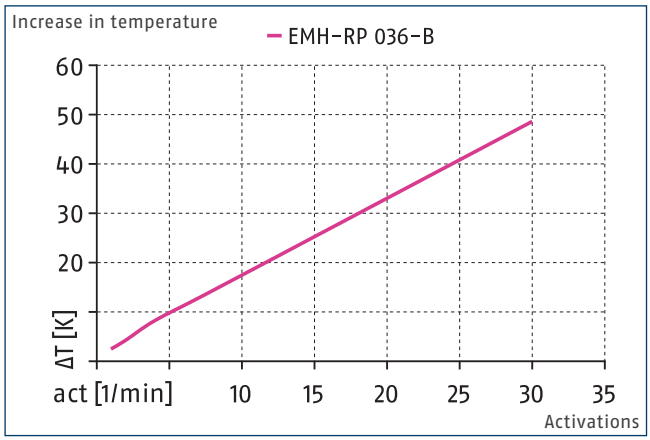

Adapter flange according to DIN ISO-9409-1-031.5

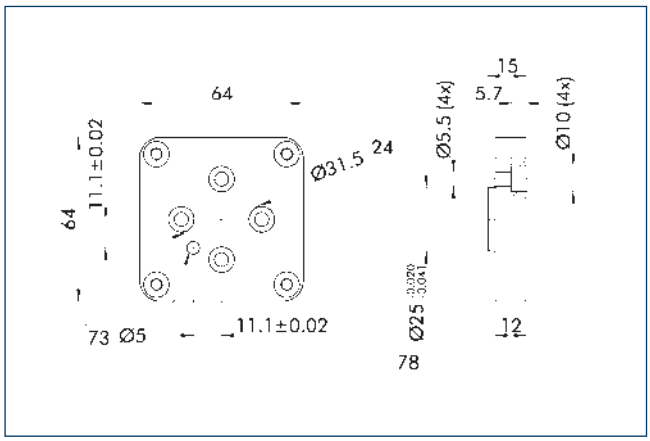

(24) Bolt circle
(73) Fit for centering pins
(78) Fit for centering

Description	ID	
ISO flanges		
ADF-ISO-031.5/EMH	1504083	

Adapter flange according to ISO-9409-1-050

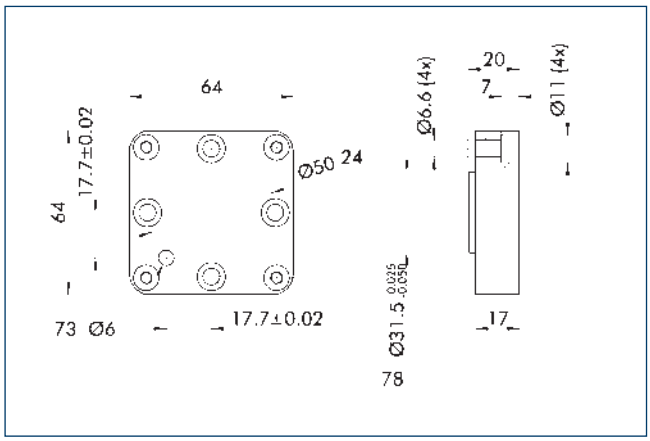

(24) Bolt circle
(73) Fit for centering pins
(78) Fit for centering

Description	ID	
ISO flanges		
ADF-ISO-050/EMH	1504080	

Voltage supply connection cable

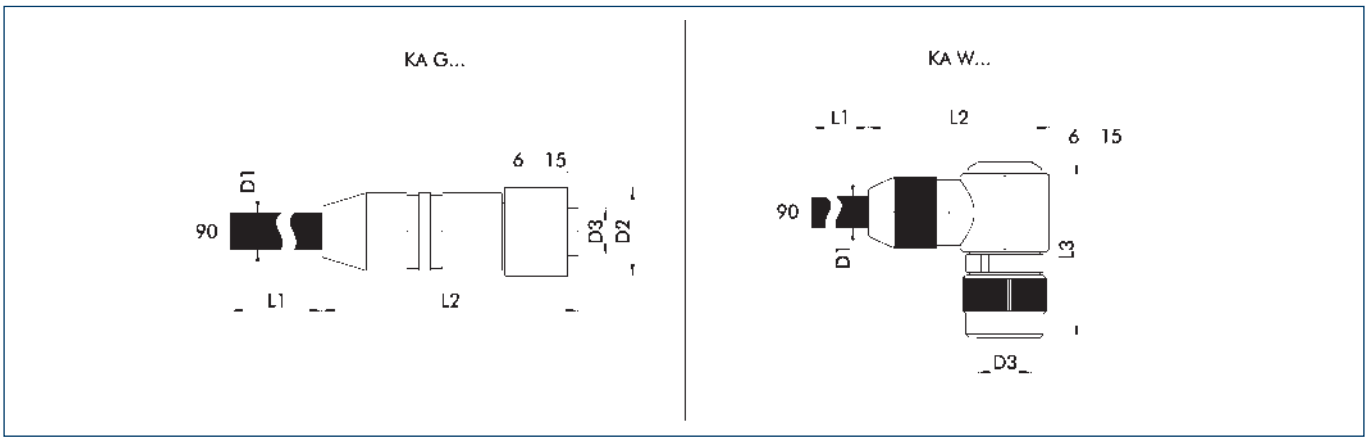

KA G... Connection cable with straight plug connector
KA W... Connection cable with angled plug connector

(6) Connection module side
(15) Socket

(90) Cable end with open wire strands

The connection cables are used to connect the SCHUNK product to the voltage supply.

Description	ID	L1	D1	L2	D2	L3	D3
		[m]	[mm]	[mm]	[mm]	[mm]	
Voltage supply connection cable – cable track compatible							
KA GLN12T0150-LK-00500-A	0310262	5	9.6	51	15		M12 T-coded
KA GLN12T0150-LK-01000-A	0310264	10	9.6	51	15		M12 T-coded
KA WLN12T0150-LK-00500-A	0310263	5	9.6	47.5		35	M12 T-coded
KA WLN12T0150-LK-01000-A	0310265	10	9.6	47.5		35	M12 T-coded

ⓘ Please observe the min. bending radius for cable track-compatible cables or the max. torsion angle for torsion-compatible cables. These are generally 10 times the cable diameter or +/- 180°/m. Please refer to the product documentation for information about max. cable length and min. wire cross section.

Power supply plug-in connector

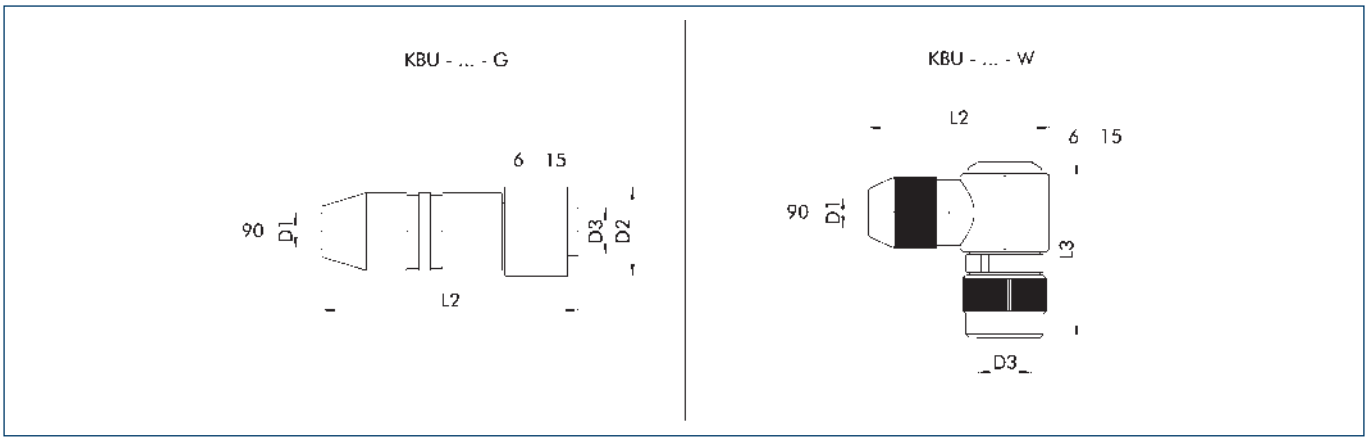

KBU – ... – G Socket with straight outlet
KBU – ... – W Socket with angular outlet

(6) Connection module side
(15) Socket

(90) D1 – max. diameter connection cable

The plug connectors are used to connect the SCHUNK product to the voltage supply. A customer cable can be used for this. The individual wire strands are clamped using screw connections in the plug connector.

Description	ID	D1 (max.)	L2	D2	L3	D3
		[mm]	[mm]	[mm]	[mm]	
Power supply plug-in connector						
KBU-M12T-G 4P	0310260	10	58	20.2		M12 T-coded
KBU-M12T-W 4P	1001514	10	43	20.2	39	M12 T-coded

ⓘ For the connection cable, a cross-section for each individual wire strand of 1.5 mm2 is recommended. Please refer to the product documentation for information about max. cable length and min. wire cross section.

Connection cable for control

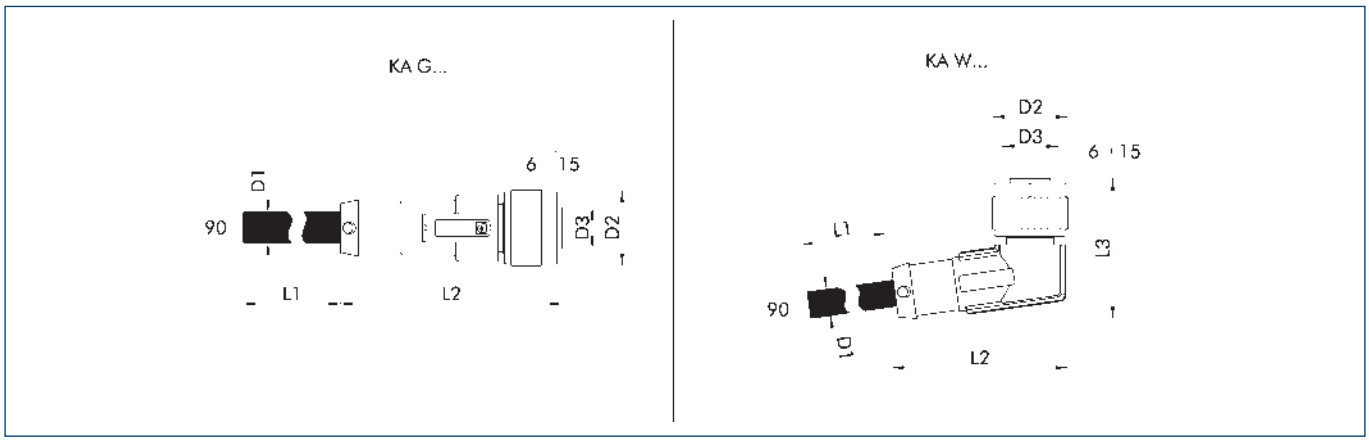

KA G...	Connection cable with straight plug connector	(6) Connection module side	(90) Cable end with open wire strands
KA W...	Connection cable with angled plug connector	(15) Socket	

The connection cables are used to control the SCHUNK product.

Description	ID	L1	D1	L2	D2	L3	D3
		[m]	[mm]	[mm]	[mm]	[mm]	
Connection cable actuation – drag chain and torsion compatible							
KA GLN1208-I0-00200-A	1395458	2	6	44	14.8		M12
KA GLN1208-I0-00500-A	1395471	5	6	44	14.8		M12
KA GLN1208-I0-01000-A	1395479	10	6	44	14.8		M12
KA WLN1208-I0-00200-A	1395482	2	6	34.5	14.8	27.4	M12
KA WLN1208-I0-00500-A	1395483	5	6	34.5	14.8	27.4	M12
KA WLN1208-I0-01000-A	1395485	10	6	34.5	14.8	27.4	M12

ⓘ Please observe the min. bending radius for cable track-compatible cables or the max. torsion angle for torsion-compatible cables. These are generally 10 times the cable diameter or +/- 180°/m. Please refer to the product documentation for information about max. cable length and min. wire cross section.

EMH RP 045

Magnetic gripper

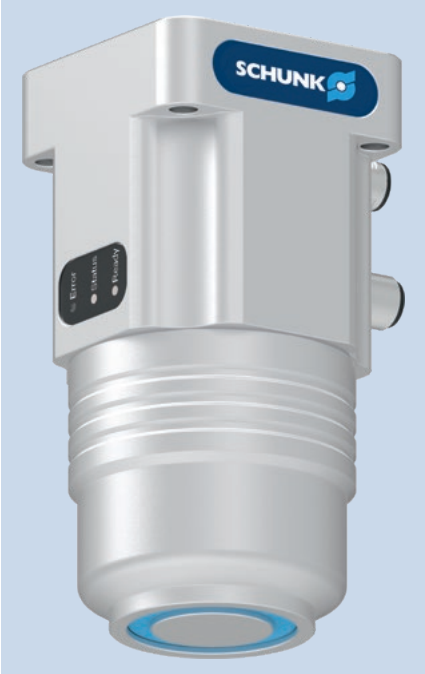

Workpiece thickness

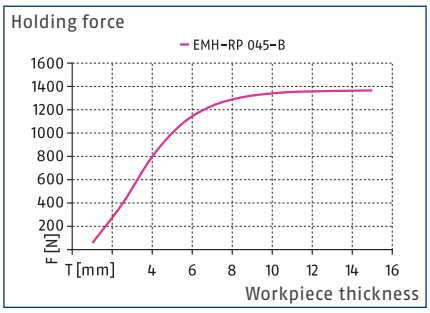

Air gap

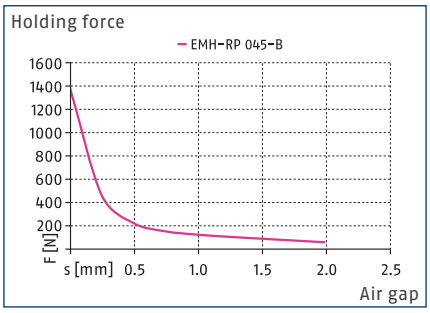

Dimensions and maximum loads

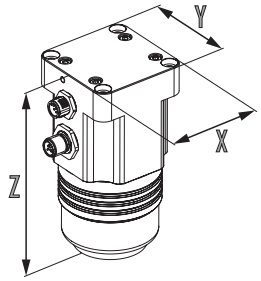

For values see technical data table

Technical data

Description		EMH-RP 045-B
ID		1351490
General operating data		
Holding force	[N]	1360
Magnet area	[cm²]	10.75
Payload for horizontal magnet surface	[kg]	22.5
Payload for vertical magnet surface	[kg]	9
Module temperature increasement in case of 5/15 activations/minute	[°C]	11/28
Activation time	[ms]	300
Min./max. ambient temperature	[°C]	5/50
Mechanical operating data		
Weight	[kg]	1.5
IP protection class		52
Electrical operating data		
Nominal voltage	[V]	24
Type of voltage		DC
Max. current power	[A]	3.8
Rated current logic	[A]	0.15
Controller electronics		integrated
Dimensions X x Y x Z	[mm]	64 x 64 x 128

Main view EMH-RP 045

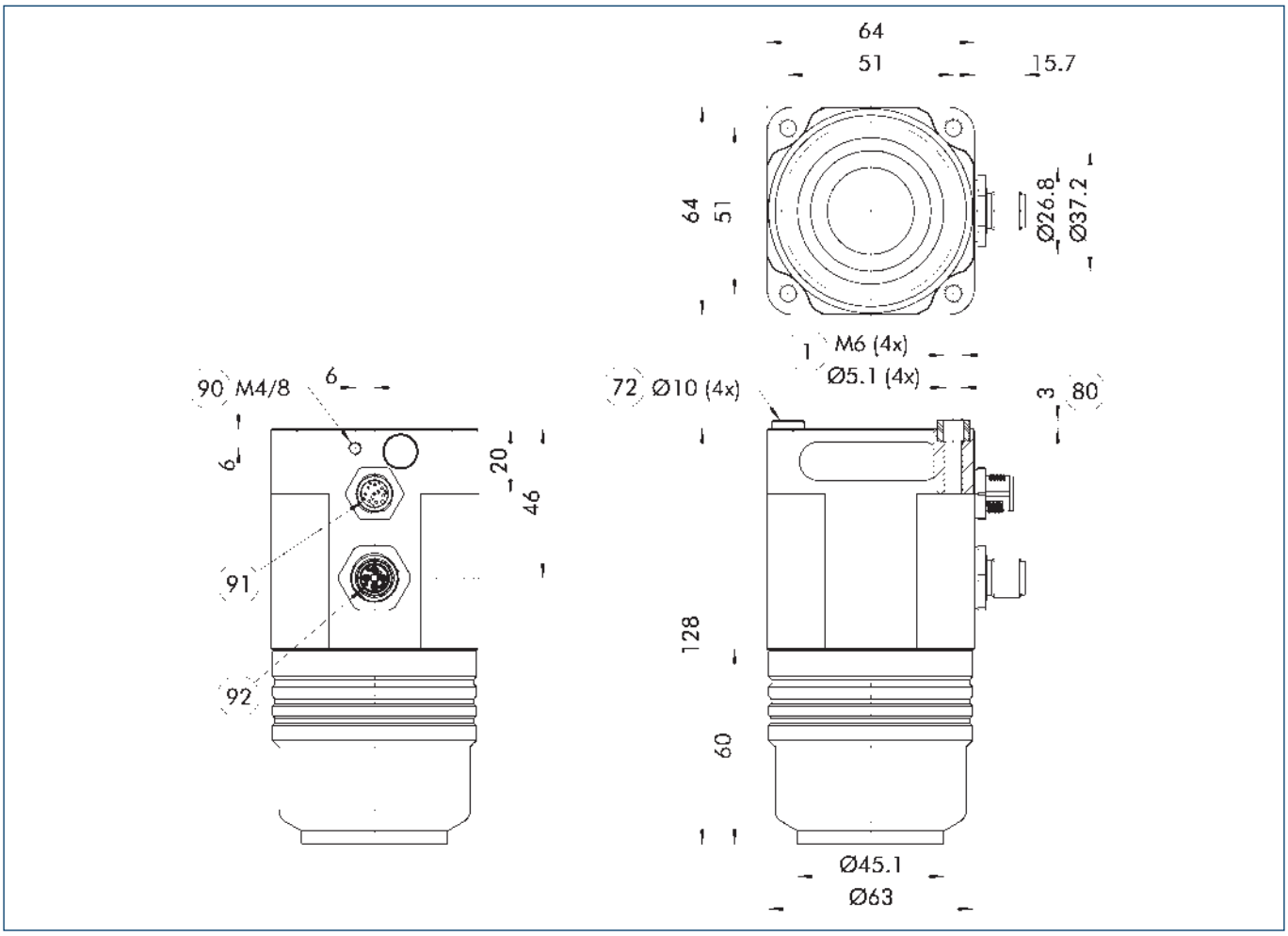

The drawing shows the magnet gripper in basis configuration, without any additional accessories.

- (1) Gripper connection
- (72) Fit for centering sleeves
- (80) Depth of the centering sleeve hole in the counter part
- (90) Functional ground
- (91) M12-socket, 8-pin (activation)
- (92) M12 connector, T-coded (voltage supply)

Increase in temperature

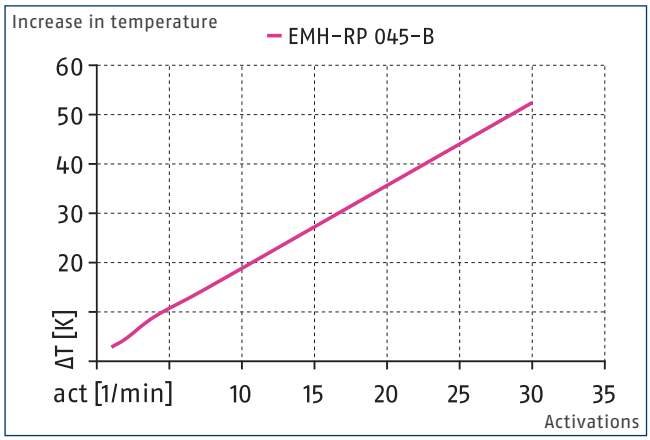

Adapter flange according to DIN ISO-9409-1-031.5

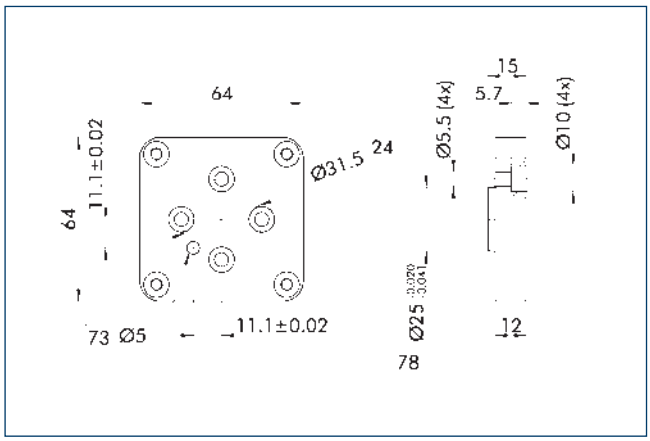

(24) Bolt circle
(73) Fit for centering pins
(78) Fit for centering

Description	ID	
ISO flanges		
ADF-ISO-031.5/EMH	1504083	

Adapter flange according to ISO-9409-1-050

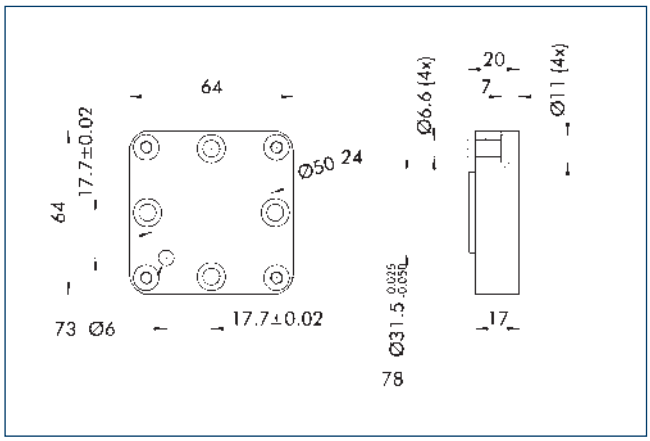

(24) Bolt circle
(73) Fit for centering pins
(78) Fit for centering

Description	ID	
ISO flanges		
ADF-ISO-050/EMH	1504080	

Voltage supply connection cable

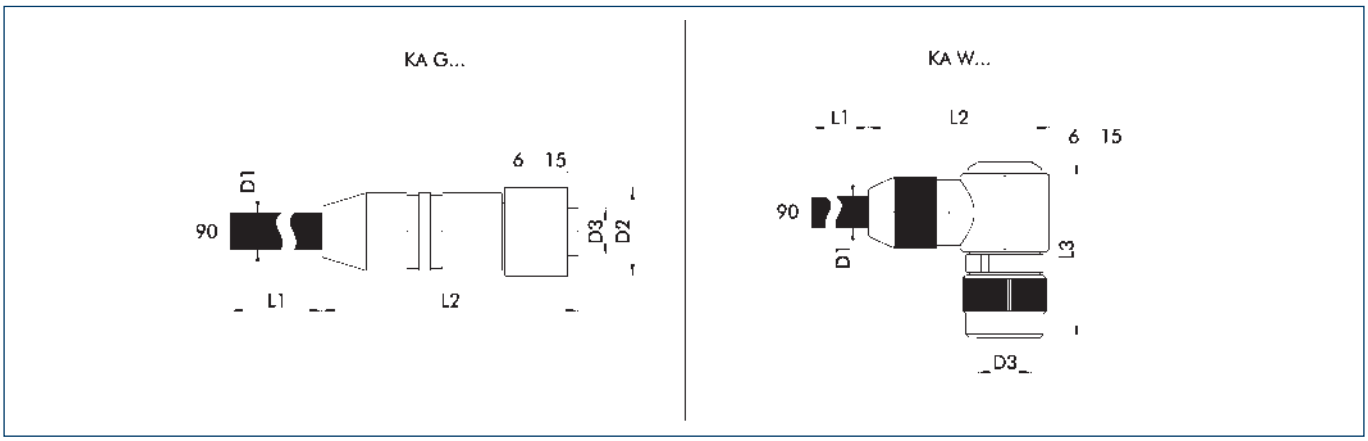

KA G...	Connection cable with straight plug connector	(6) Connection module side	(90) Cable end with open wire strands
KA W...	Connection cable with angled plug connector	(15) Socket	

The connection cables are used to connect the SCHUNK product to the voltage supply.

Description	ID	L1	D1	L2	D2	L3	D3
		[m]	[mm]	[mm]	[mm]	[mm]	
Voltage supply connection cable – cable track compatible							
KA GLN12T0150-LK-00500-A	0310262	5	9.6	51	15		M12 T-coded
KA GLN12T0150-LK-01000-A	0310264	10	9.6	51	15		M12 T-coded
KA WLN12T0150-LK-00500-A	0310263	5	9.6	47.5		35	M12 T-coded
KA WLN12T0150-LK-01000-A	0310265	10	9.6	47.5		35	M12 T-coded

ⓘ Please observe the min. bending radius for cable track-compatible cables or the max. torsion angle for torsion-compatible cables. These are generally 10 times the cable diameter or +/- 180°/m. Please refer to the product documentation for information about max. cable length and min. wire cross section.

Power supply plug-in connector

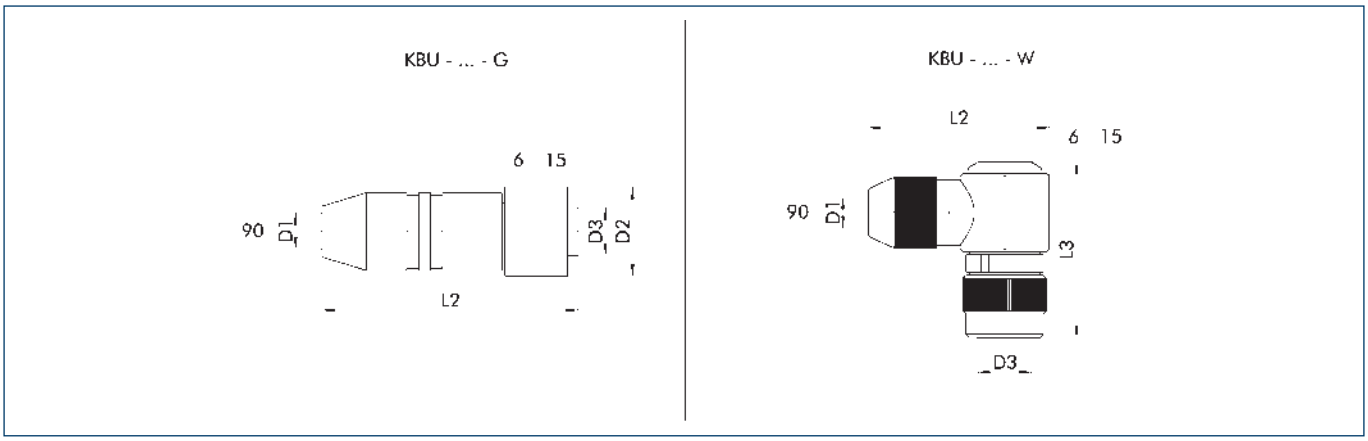

KBU – ... – G	Socket with straight outlet	(6) Connection module side	(90) D1 – max. diameter connection cable
KBU – ... – W	Socket with angular outlet	(15) Socket	

The plug connectors are used to connect the SCHUNK product to the voltage supply. A customer cable can be used for this. The individual wire strands are clamped using screw connections in the plug connector.

Description	ID	D1 (max.)	L2	D2	L3	D3
		[mm]	[mm]	[mm]	[mm]	
Power supply plug-in connector						
KBU-M12T-G 4P	0310260	10	58	20.2		M12 T-coded
KBU-M12T-W 4P	1001514	10	43	20.2	39	M12 T-coded

ⓘ For the connection cable, a cross-section for each individual wire strand of 1.5 mm2 is recommended. Please refer to the product documentation for information about max. cable length and min. wire cross section.

Connection cable for control

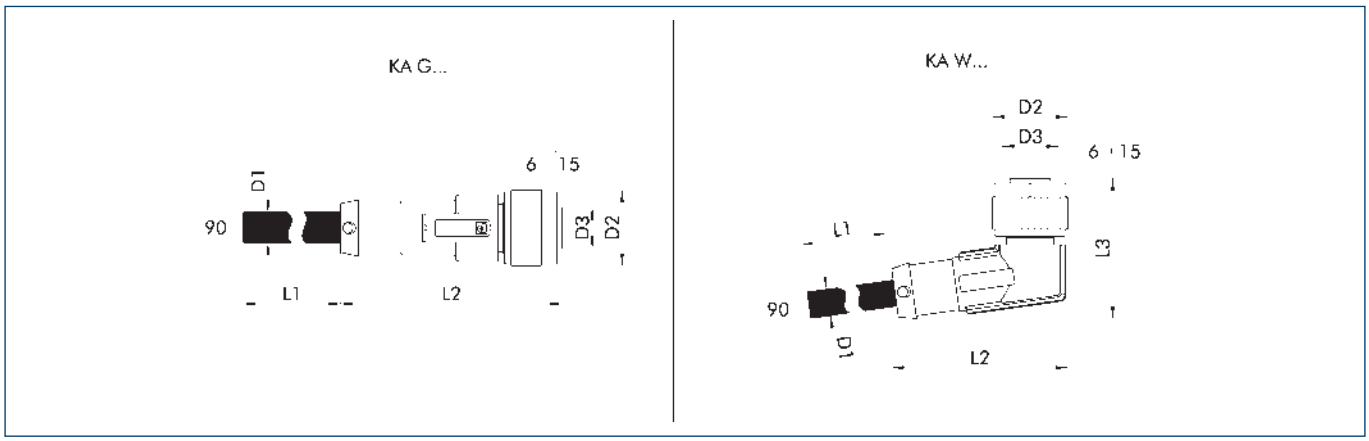

KA G...	Connection cable with straight plug connector	(6) Connection module side	(90) Cable end with open wire strands
KA W...	Connection cable with angled plug connector	(15) Socket	

The connection cables are used to control the SCHUNK product.

Description	ID	L1	D1	L2	D2	L3	D3
		[m]	[mm]	[mm]	[mm]	[mm]	
Connection cable actuation – drag chain and torsion compatible							
KA GLN1208-I0-00200-A	1395458	2	6	44	14.8		M12
KA GLN1208-I0-00500-A	1395471	5	6	44	14.8		M12
KA GLN1208-I0-01000-A	1395479	10	6	44	14.8		M12
KA WLN1208-I0-00200-A	1395482	2	6	34.5	14.8	27.4	M12
KA WLN1208-I0-00500-A	1395483	5	6	34.5	14.8	27.4	M12
KA WLN1208-I0-01000-A	1395485	10	6	34.5	14.8	27.4	M12

ⓘ Please observe the min. bending radius for cable track-compatible cables or the max. torsion angle for torsion-compatible cables. These are generally 10 times the cable diameter or +/- 180°/m. Please refer to the product documentation for information about max. cable length and min. wire cross section.

EMH RP 084

Magnetic gripper

Workpiece thickness

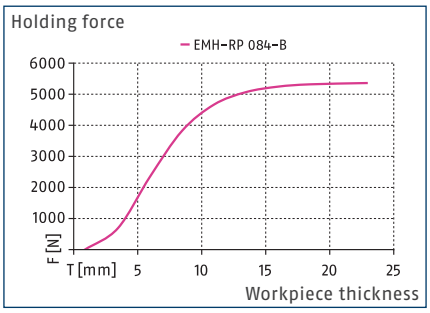

Air gap

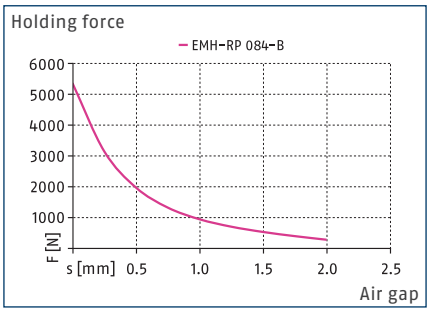

Dimensions and maximum loads

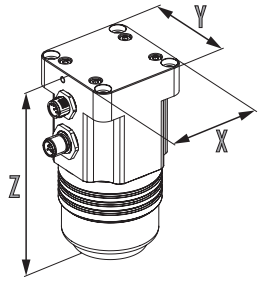

For values see technical data table

Technical data

Description		EMH-RP 084-B
ID		1351496
General operating data		
Holding force	[N]	5370
Magnet area	[cm²]	41.25
Payload for horizontal magnet surface	[kg]	89
Payload for vertical magnet surface	[kg]	35
Module temperature increasement in case of 5/15 activations/minute	[°C]	14/37
Activation time	[ms]	500
Min./max. ambient temperature	[°C]	5/50
Mechanical operating data		
Weight	[kg]	6.5
IP protection class		52
Electrical operating data		
Nominal voltage	[V]	24
Type of voltage		DC
Max. current power	[A]	6.1
Rated current logic	[A]	0.15
Controller electronics		integrated
Dimensions X x Y x Z	[mm]	128 x 128 x 157

Main view EMH-RP 084

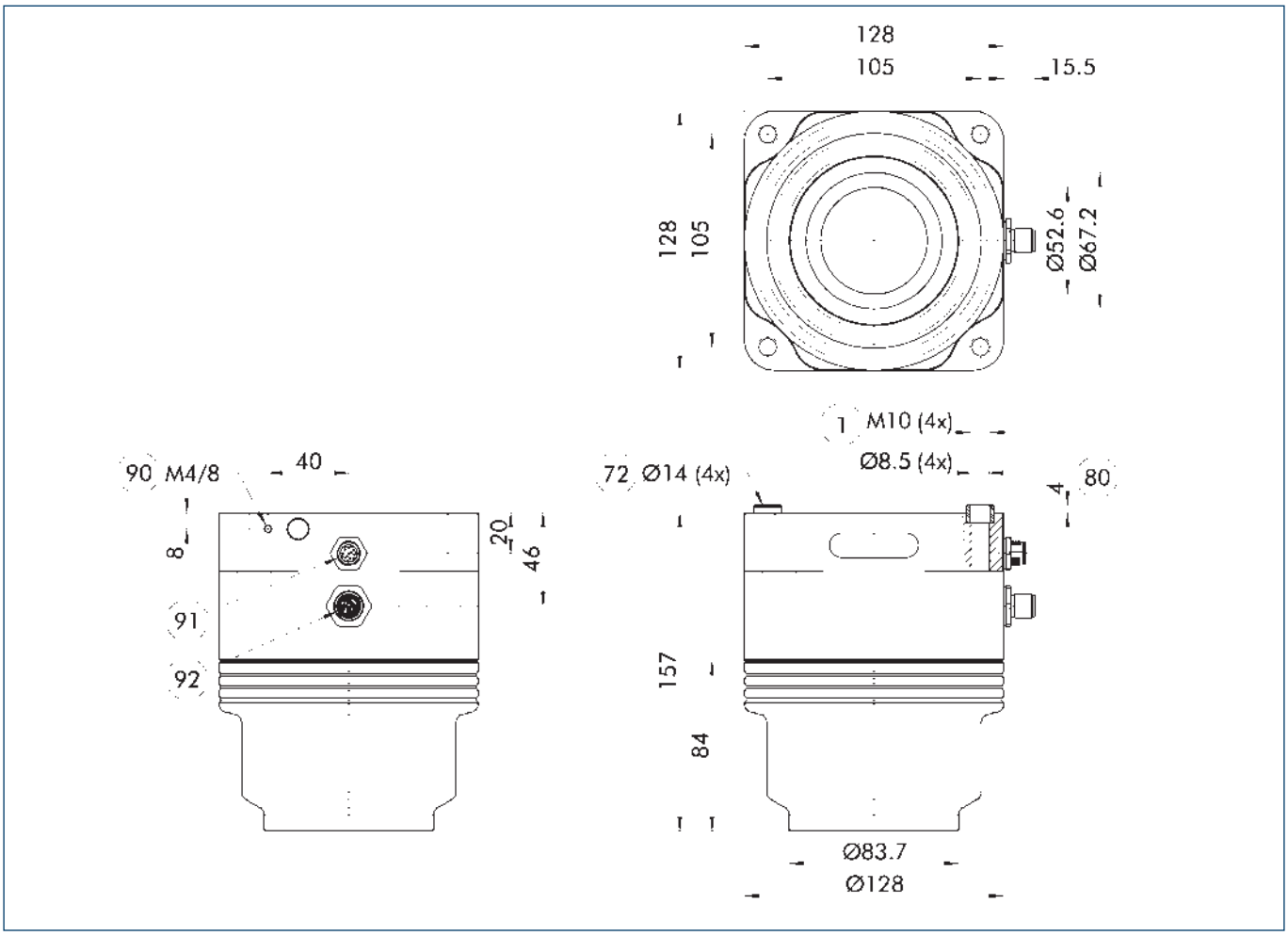

The drawing shows the magnet gripper in basis configuration, without any additional accessories.

(1) Gripper connection
(72) Fit for centering sleeves
(80) Depth of the centering sleeve hole in the counter part
(90) Functional ground
(91) M12-socket, 8-pin (activation)
(92) M12 connector, T-coded (voltage supply)

Increase in temperature

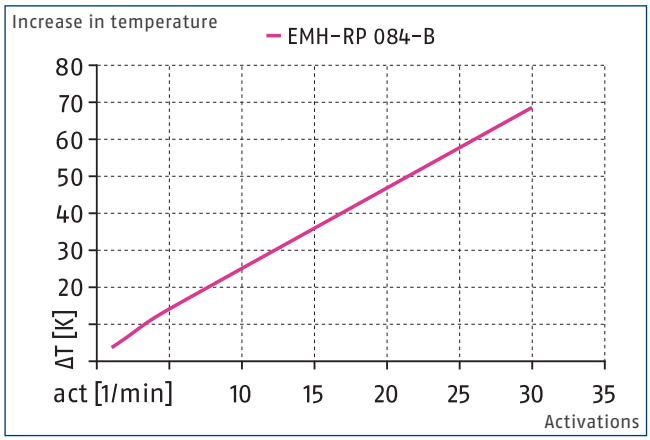

Voltage supply connection cable

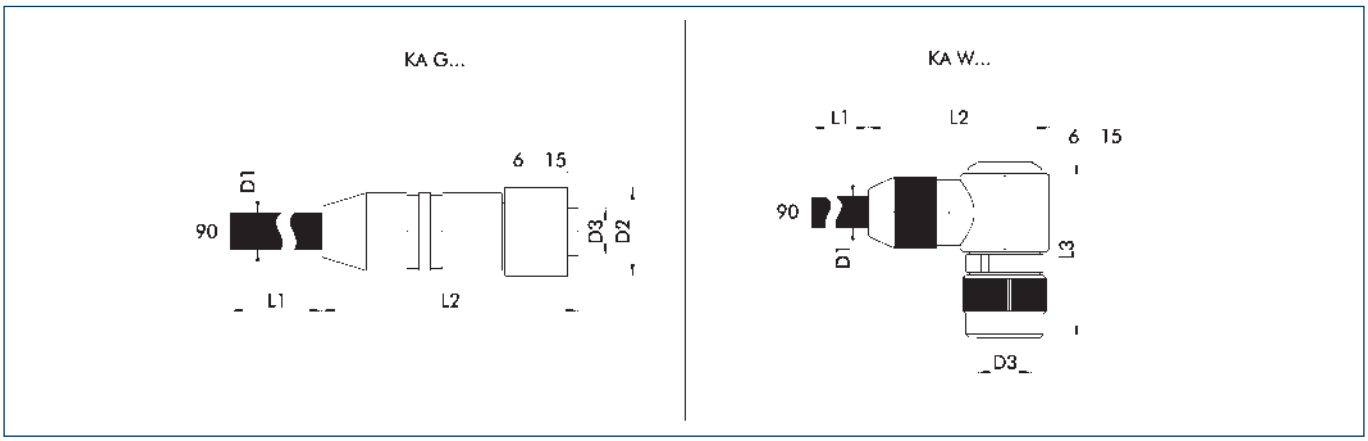

KA G...	Connection cable with straight plug connector	(6) Connection module side	(90) Cable end with open wire strands
KA W...	Connection cable with angled plug connector	(15) Socket	

The connection cables are used to connect the SCHUNK product to the voltage supply.

Description	ID	L1	D1	L2	D2	L3	D3
		[m]	[mm]	[mm]	[mm]	[mm]	
Voltage supply connection cable – cable track compatible							
KA GLN12T0150-LK-00500-A	0310262	5	9.6	51	15		M12 T-coded
KA GLN12T0150-LK-01000-A	0310264	10	9.6	51	15		M12 T-coded
KA WLN12T0150-LK-00500-A	0310263	5	9.6	47.5		35	M12 T-coded
KA WLN12T0150-LK-01000-A	0310265	10	9.6	47.5		35	M12 T-coded

ⓘ Please observe the min. bending radius for cable track-compatible cables or the max. torsion angle for torsion-compatible cables. These are generally 10 times the cable diameter or +/- 180°/m. Please refer to the product documentation for information about max. cable length and min. wire cross section.

Power supply plug-in connector

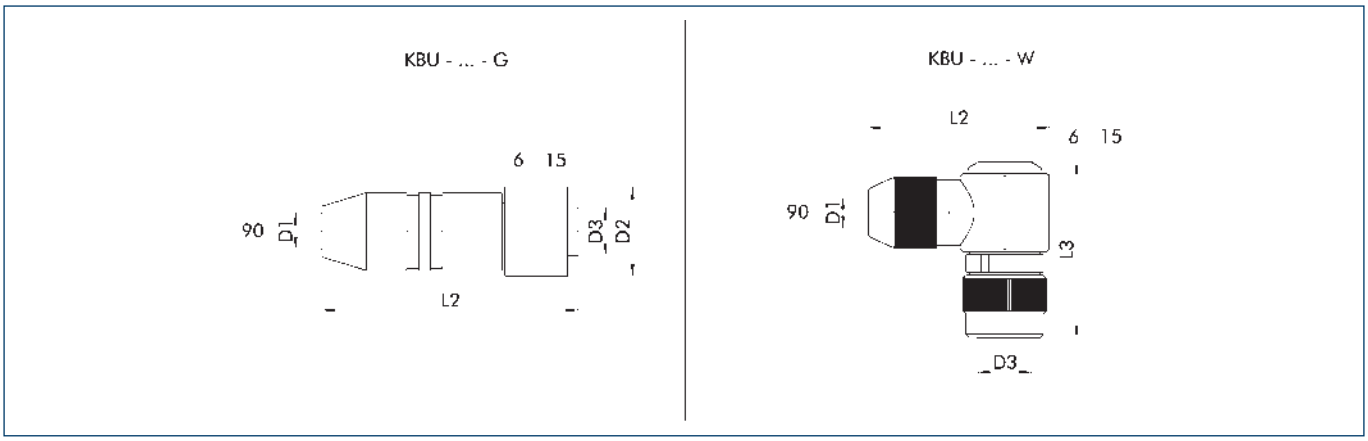

KBU – ... – G	Socket with straight outlet	(6) Connection module side	(90) D1 – max. diameter connection cable
KBU – ... – W	Socket with angular outlet	(15) Socket	

The plug connectors are used to connect the SCHUNK product to the voltage supply. A customer cable can be used for this. The individual wire strands are clamped using screw connections in the plug connector.

Description	ID	D1 (max.)	L2	D2	L3	D3
		[mm]	[mm]	[mm]	[mm]	
Power supply plug-in connector						
KBU-M12T-G 4P	0310260	10	58	20.2		M12 T-coded
KBU-M12T-W 4P	1001514	10	43	20.2	39	M12 T-coded

ⓘ For the connection cable, a cross-section for each individual wire strand of 1.5 mm2 is recommended. Please refer to the product documentation for information about max. cable length and min. wire cross section.

Connection cable for control

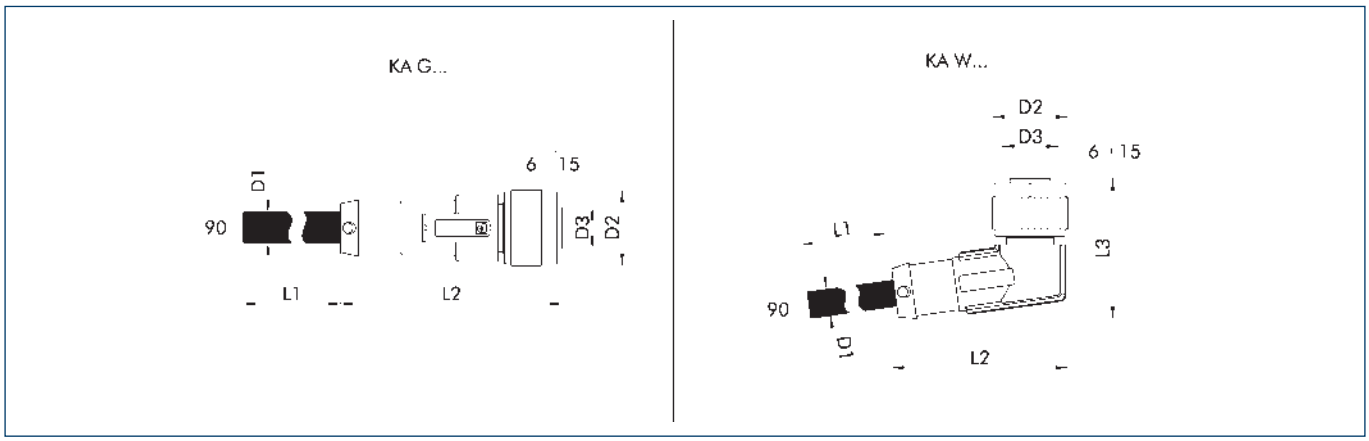

KA G...	Connection cable with straight plug connector	(6) Connection module side	(90) Cable end with open wire strands
KA W...	Connection cable with angled plug connector	(15) Socket	

The connection cables are used to control the SCHUNK product.

Description	ID	L1	D1	L2	D2	L3	D3
		[m]	[mm]	[mm]	[mm]	[mm]	
Connection cable actuation - drag chain and torsion compatible							
KA GLN1208-I0-00200-A	1395458	2	6	44	14.8		M12
KA GLN1208-I0-00500-A	1395471	5	6	44	14.8		M12
KA GLN1208-I0-01000-A	1395479	10	6	44	14.8		M12
KA WLN1208-I0-00200-A	1395482	2	6	34.5	14.8	27.4	M12
KA WLN1208-I0-00500-A	1395483	5	6	34.5	14.8	27.4	M12
KA WLN1208-I0-01000-A	1395485	10	6	34.5	14.8	27.4	M12

ⓘ Please observe the min. bending radius for cable track-compatible cables or the max. torsion angle for torsion-compatible cables. These are generally 10 times the cable diameter or +/- 180°/m. Please refer to the product documentation for information about max. cable length and min. wire cross section.

EMH RP 114

Magnetic gripper

Workpiece thickness

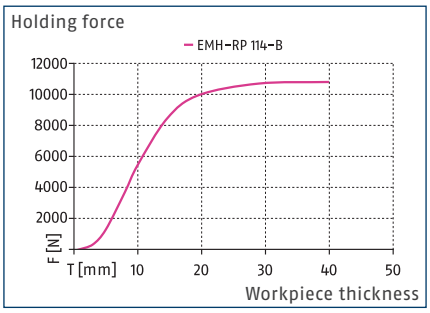

Air gap

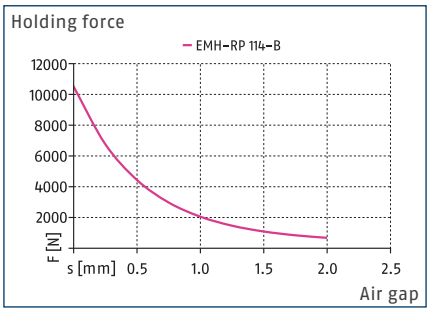

Dimensions and maximum loads

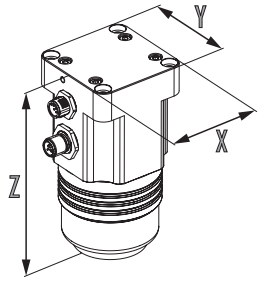

For values see technical data table

Technical data

Description		EMH-RP 114-B
ID		1351499
General operating data		
Holding force	[N]	10550
Magnet area	[cm²]	81.97
Payload for horizontal magnet surface	[kg]	175
Payload for vertical magnet surface	[kg]	70
Module temperature increasement in case of 5/15 activations/minute	[°C]	20/45
Activation time	[ms]	700
Min./max. ambient temperature	[°C]	5/50
Mechanical operating data		
Weight	[kg]	8
IP protection class		52
Electrical operating data		
Nominal voltage	[V]	24
Type of voltage		DC
Max. current power	[A]	7.1
Rated current logic	[A]	0.15
Controller electronics		integrated
Dimensions X x Y x Z	[mm]	128 x 128 x 157

Main view EMH-RP 114

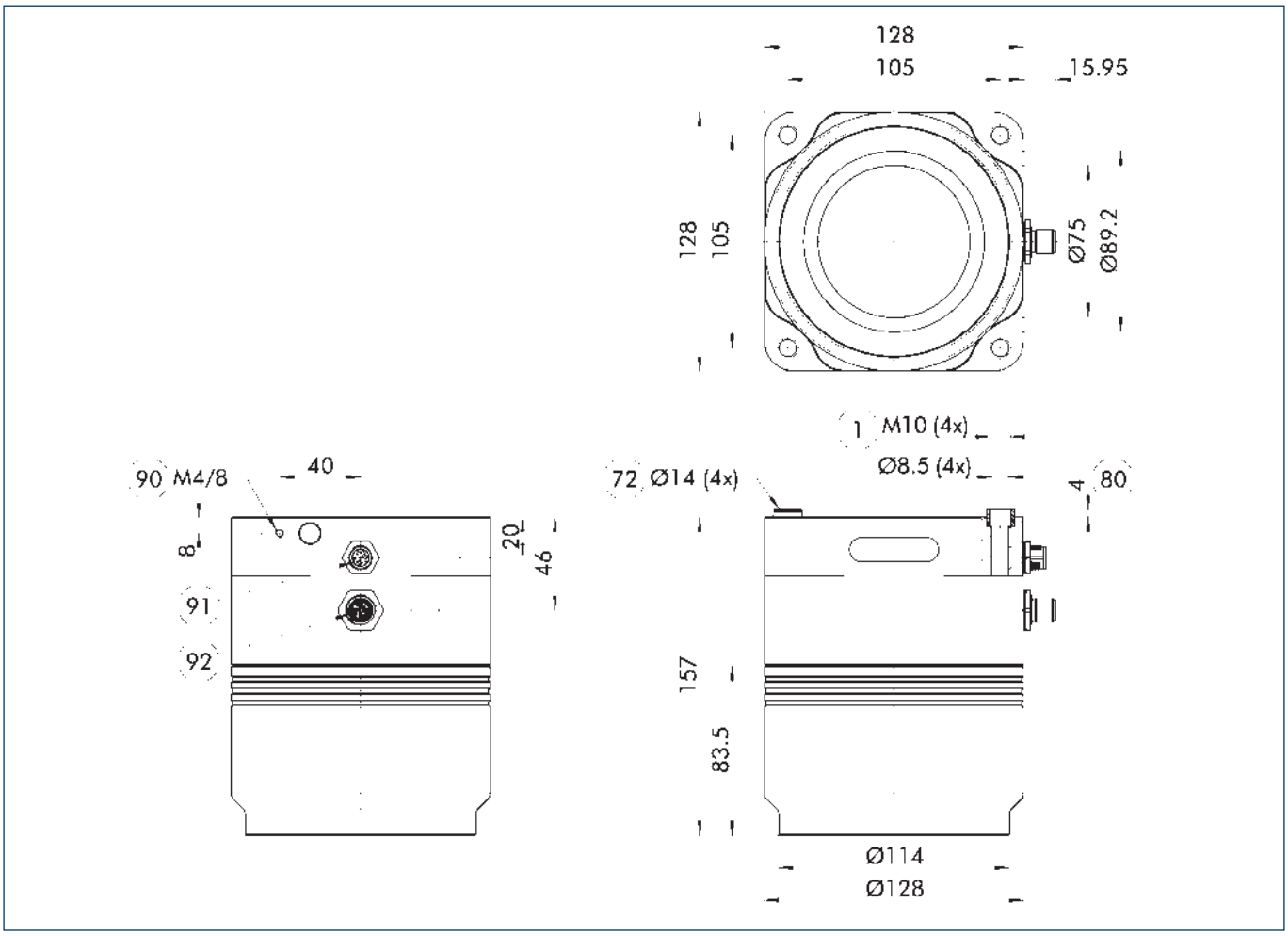

The drawing shows the magnet gripper in basis configuration, without any additional accessories.

- (1) Gripper connection
- (72) Fit for centering sleeves
- (80) Depth of the centering sleeve hole in the counter part
- (90) Functional ground
- (91) M12-socket, 8-pin (activation)
- (92) M12 connector, T-coded (voltage supply)

Increase in temperature

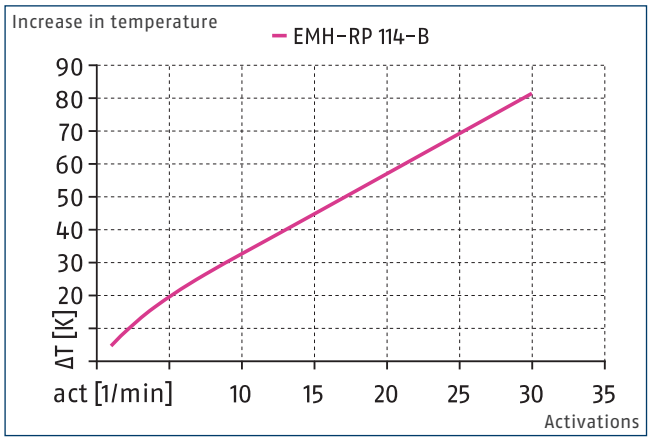

Voltage supply connection cable

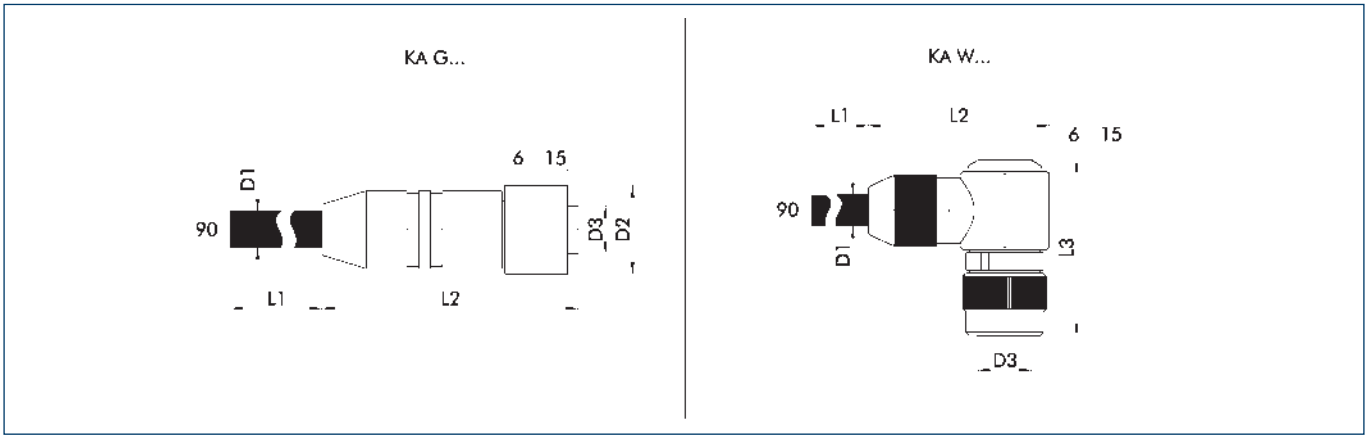

KA G...	Connection cable with straight plug connector	(6) Connection module side	(90) Cable end with open wire strands
KA W...	Connection cable with angled plug connector	(15) Socket	

The connection cables are used to connect the SCHUNK product to the voltage supply.

Description	ID	L1	D1	L2	D2	L3	D3
		[m]	[mm]	[mm]	[mm]	[mm]	
Voltage supply connection cable – cable track compatible							
KA GLN12T0150-LK-00500-A	0310262	5	9.6	51	15		M12 T-coded
KA GLN12T0150-LK-01000-A	0310264	10	9.6	51	15		M12 T-coded
KA WLN12T0150-LK-00500-A	0310263	5	9.6	47.5		35	M12 T-coded
KA WLN12T0150-LK-01000-A	0310265	10	9.6	47.5		35	M12 T-coded

ⓘ Please observe the min. bending radius for cable track-compatible cables or the max. torsion angle for torsion-compatible cables. These are generally 10 times the cable diameter or +/- 180°/m. Please refer to the product documentation for information about max. cable length and min. wire cross section.

Power supply plug-in connector

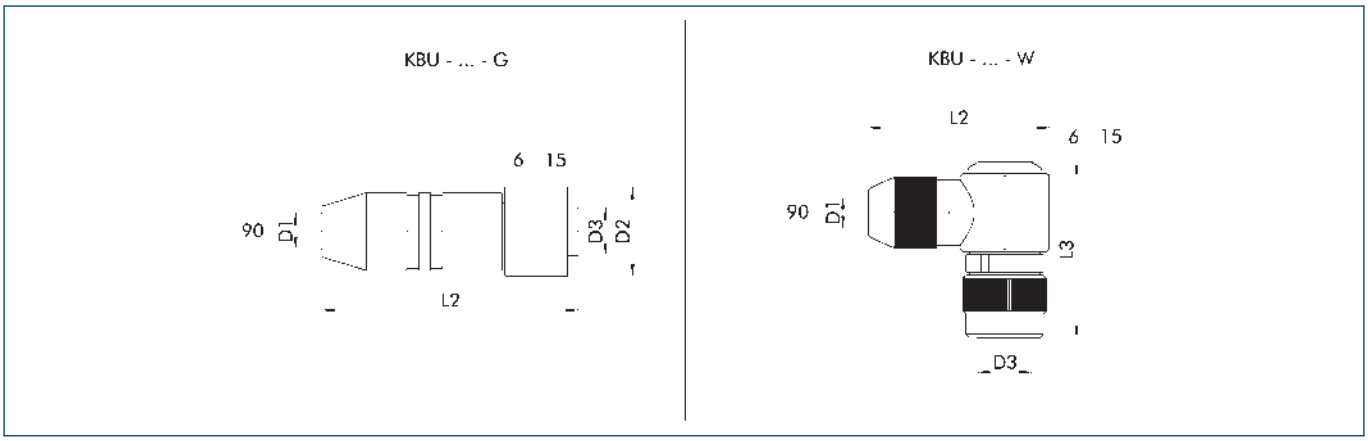

KBU – ... – G	Socket with straight outlet	(6) Connection module side	(90) D1 – max. diameter connection cable
KBU – ... – W	Socket with angular outlet	(15) Socket	

The plug connectors are used to connect the SCHUNK product to the voltage supply. A customer cable can be used for this. The individual wire strands are clamped using screw connections in the plug connector.

Description	ID	D1 (max.)	L2	D2	L3	D3
		[mm]	[mm]	[mm]	[mm]	
Power supply plug-in connector						
KBU-M12T-G 4P	0310260	10	58	20.2		M12 T-coded
KBU-M12T-W 4P	1001514	10	43	20.2	39	M12 T-coded

ⓘ For the connection cable, a cross-section for each individual wire strand of 1.5 mm2 is recommended. Please refer to the product documentation for information about max. cable length and min. wire cross section.

Connection cable for control

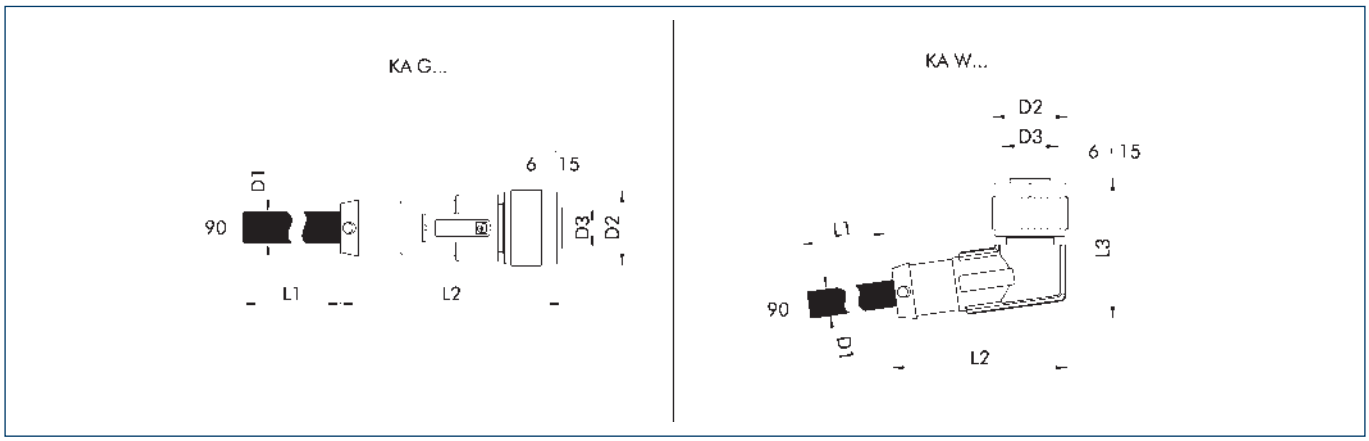

KA G...	Connection cable with straight plug connector	(6) Connection module side	(90) Cable end with open wire strands
KA W...	Connection cable with angled plug connector	(15) Socket	

The connection cables are used to control the SCHUNK product.

Description	ID	L1	D1	L2	D2	L3	D3
		[m]	[mm]	[mm]	[mm]	[mm]	
Connection cable actuation – drag chain and torsion compatible							
KA GLN1208-I0-00200-A	1395458	2	6	44	14.8		M12
KA GLN1208-I0-00500-A	1395471	5	6	44	14.8		M12
KA GLN1208-I0-01000-A	1395479	10	6	44	14.8		M12
KA WLN1208-I0-00200-A	1395482	2	6	34.5	14.8	27.4	M12
KA WLN1208-I0-00500-A	1395483	5	6	34.5	14.8	27.4	M12
KA WLN1208-I0-01000-A	1395485	10	6	34.5	14.8	27.4	M12

ⓘ Please observe the min. bending radius for cable track-compatible cables or the max. torsion angle for torsion-compatible cables. These are generally 10 times the cable diameter or +/- 180°/m. Please refer to the product documentation for information about max. cable length and min. wire cross section.

EMH MP 060

Magnetic gripper

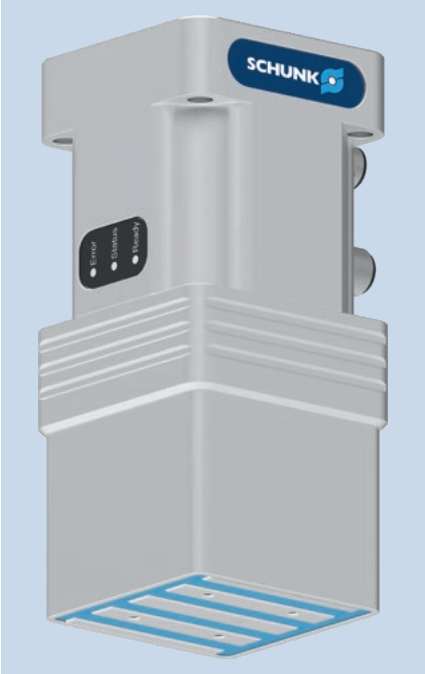

Workpiece thickness

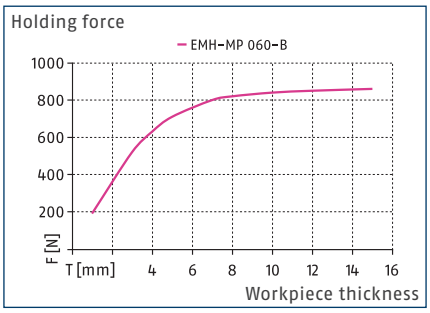

Air gap

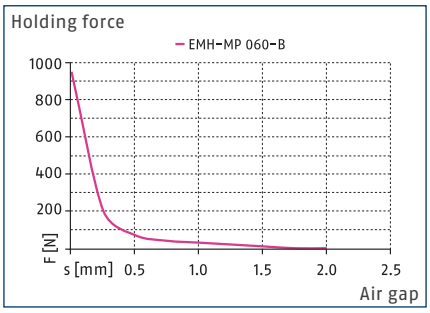

Dimensions and maximum loads

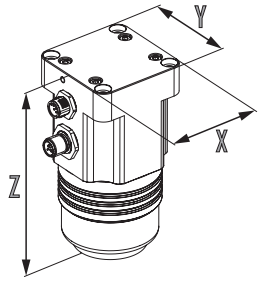

For values see technical data table

Technical data

Description		EMH-MP 060-B
ID		1426785
General operating data		
Holding force	[N]	850
Magnet area	[cm²]	15.36
Payload for horizontal magnet surface	[kg]	14
Payload for vertical magnet surface	[kg]	5.5
Module temperature increasement in case of 5/15 activations/minute	[°C]	6/16
Activation time	[ms]	200
Min./max. ambient temperature	[°C]	5/50
Mechanical operating data		
Weight	[kg]	2
IP protection class		52
Electrical operating data		
Nominal voltage	[V]	24
Type of voltage		DC
Max. current power	[A]	9.8
Rated current logic	[A]	0.15
Controller electronics		integrated
Dimensions X x Y x Z	[mm]	64 x 64 x 141

Main view

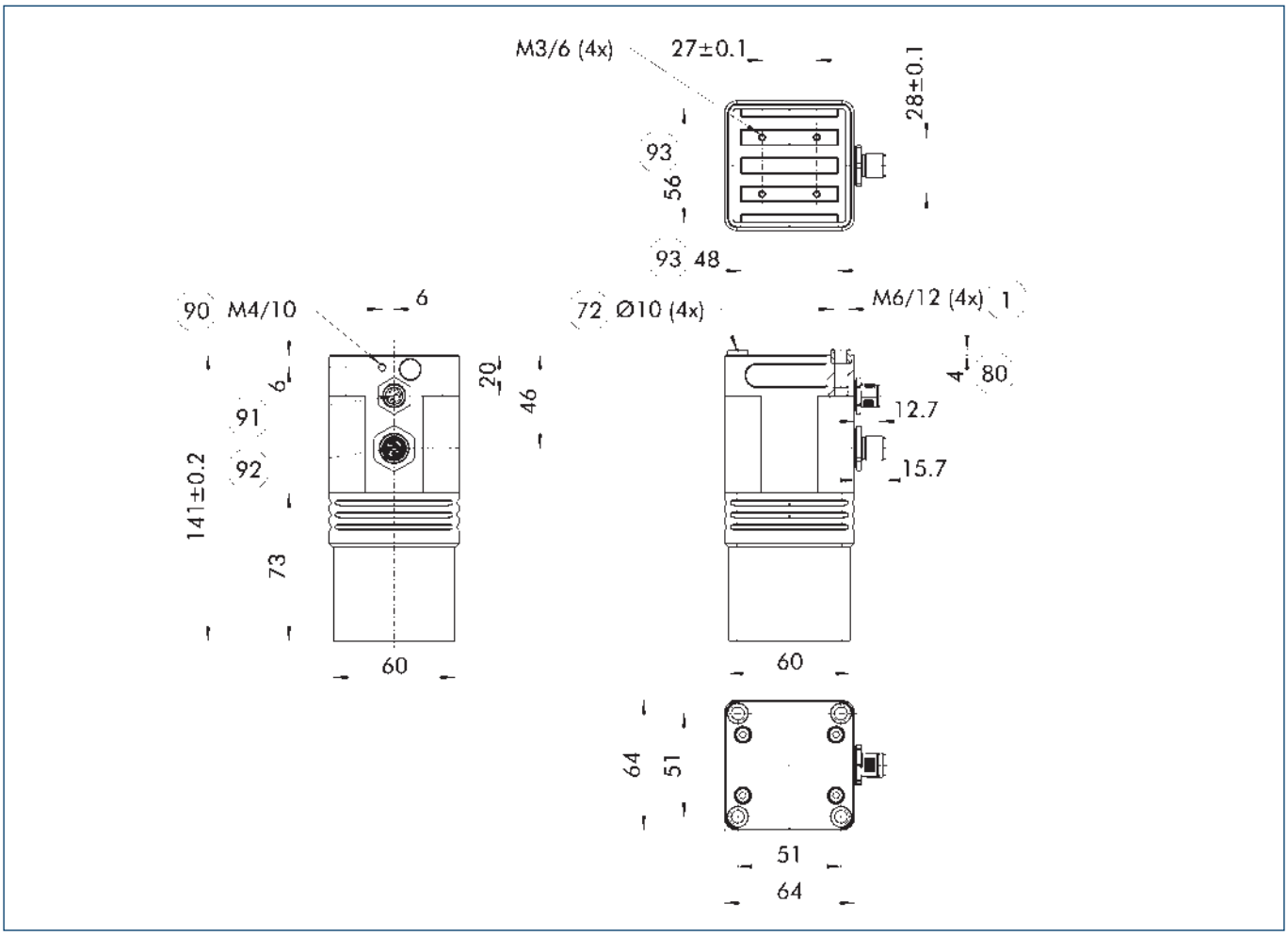

The drawing shows the magnet gripper in basis configuration, without any additional accessories.

- (1) Robot-side connection
- (72) Fit for centering sleeves
- (80) Depth of the centering sleeve hole in the counter part
- (90) Functional ground
- (91) M12-socket, 8-pin (activation)
- (92) M12 connector, T-coded (voltage supply)
- (93) Magnet

Increase in temperature

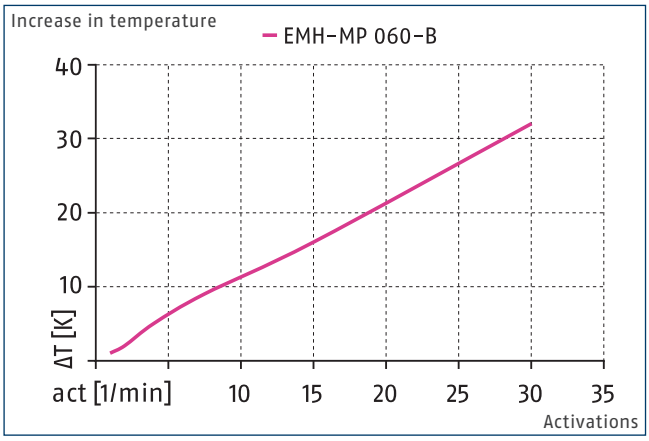

Pole extension

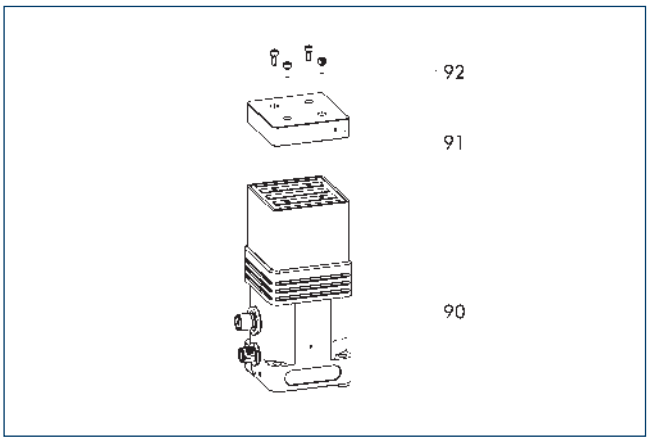

(90) Magnetic gripper EMH
(91) Pole extension
(92) Screws

Pole extensions enable the secure holding of customer-specific workpiece shapes. The pole extensions can be customized to the workpiece to be gripped. The mounting material and centering elements are included in the scope of delivery.

Description	ID	Dimensions L x W x H	Note
		[mm]	
Pole extension			
PVL EMH-MP-F-B	1475428	60/60/15	Customizable

ⓘ When using pole extensions, the max. payload is reduced by up to 75%.

Adapter flange according to DIN ISO-9409-1-031.5

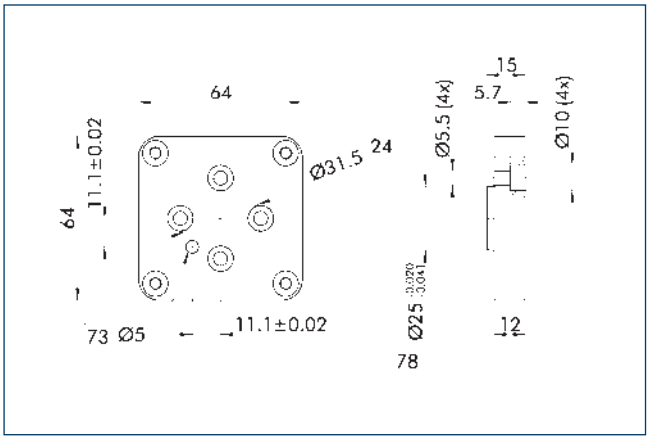

(24) Bolt circle
(73) Fit for centering pins
(78) Fit for centering

Description	ID	
ISO flanges		
ADF-ISO-031.5/EMH	1504083	

Adapter flange according to ISO-9409-1-050

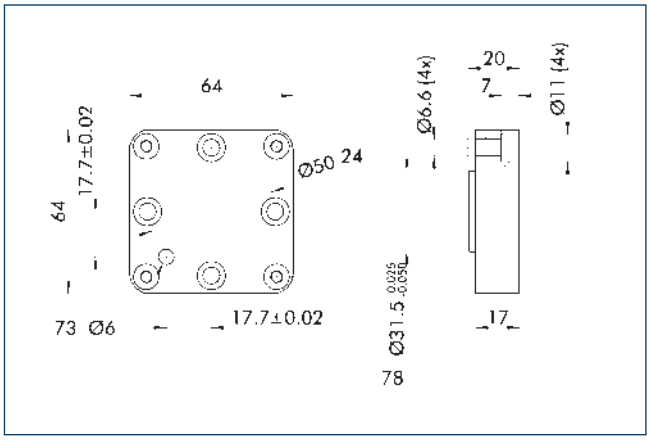

(24) Bolt circle
(73) Fit for centering pins
(78) Fit for centering

Description	ID	
ISO flanges		
ADF-ISO-050/EMH	1504080	

Voltage supply connection cable

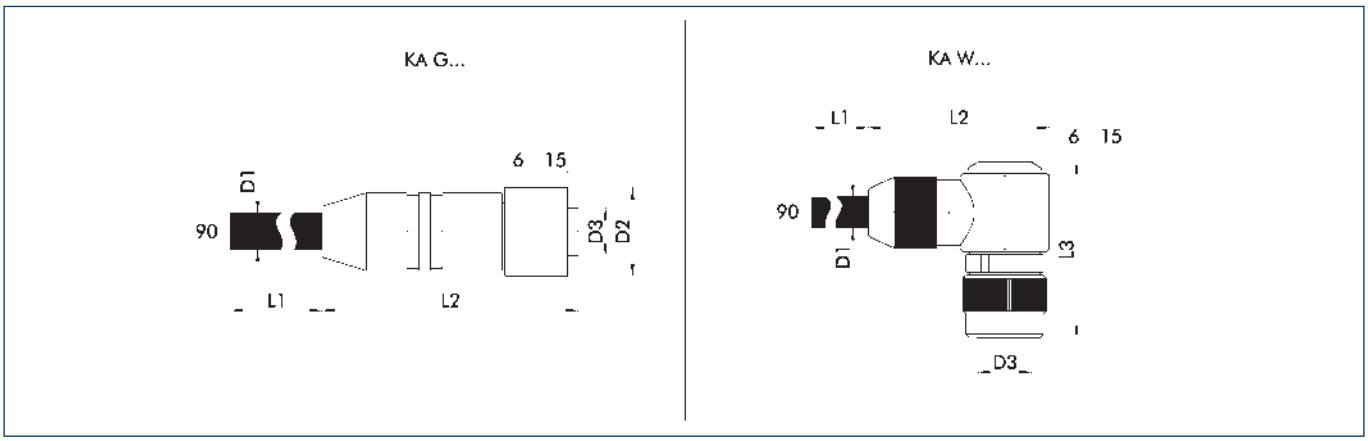

KA G... Connection cable with straight plug connector
KA W... Connection cable with angled plug connector

(6) Connection module side
(15) Socket

(90) Cable end with open wire strands

The connection cables are used to connect the SCHUNK product to the voltage supply.

Description	ID	L1	D1	L2	D2	L3	D3
		[m]	[mm]	[mm]	[mm]	[mm]	
Voltage supply connection cable – cable track compatible							
KA GLN12T0150-LK-00500-A	0310262	5	9.6	51	15		M12 T-coded
KA GLN12T0150-LK-01000-A	0310264	10	9.6	51	15		M12 T-coded
KA WLN12T0150-LK-00500-A	0310263	5	9.6	47.5		35	M12 T-coded
KA WLN12T0150-LK-01000-A	0310265	10	9.6	47.5		35	M12 T-coded

ⓘ Please observe the min. bending radius for cable track-compatible cables or the max. torsion angle for torsion-compatible cables. These are generally 10 times the cable diameter or +/- 180°/m. Please refer to the product documentation for information about max. cable length and min. wire cross section.

Power supply plug-in connector

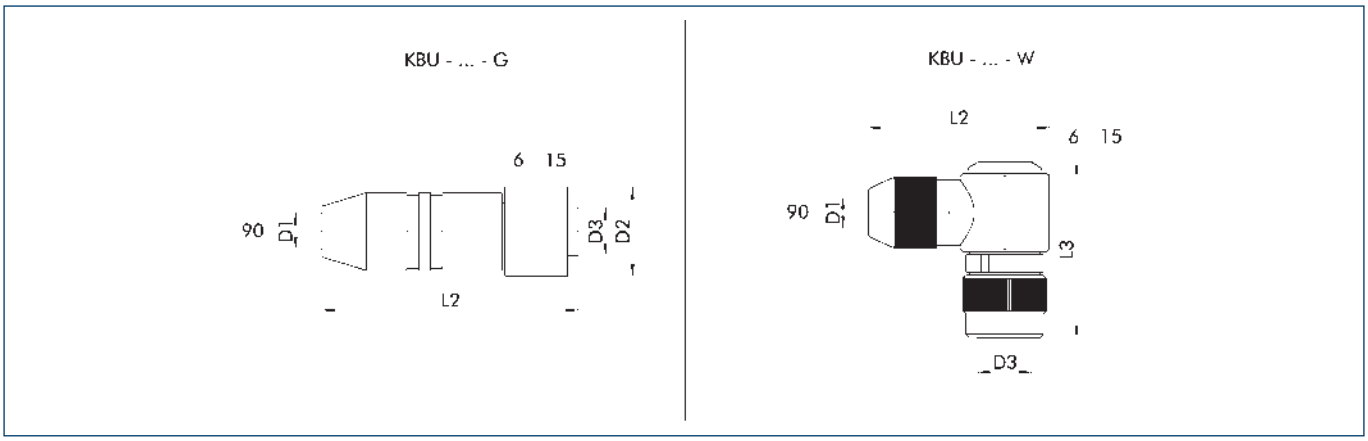

KBU – ... – G Socket with straight outlet
KBU – ... – W Socket with angular outlet

(6) Connection module side
(15) Socket

(90) D1 – max. diameter connection cable

The plug connectors are used to connect the SCHUNK product to the voltage supply. A customer cable can be used for this. The individual wire strands are clamped using screw connections in the plug connector.

Description	ID	D1 (max.)	L2	D2	L3	D3
		[mm]	[mm]	[mm]	[mm]	
Power supply plug-in connector						
KBU-M12T-G 4P	0310260	10	58	20.2		M12 T-coded
KBU-M12T-W 4P	1001514	10	43	20.2	39	M12 T-coded

ⓘ For the connection cable, a cross-section for each individual wire strand of 1.5 mm2 is recommended. Please refer to the product documentation for information about max. cable length and min. wire cross section.

Connection cable for control

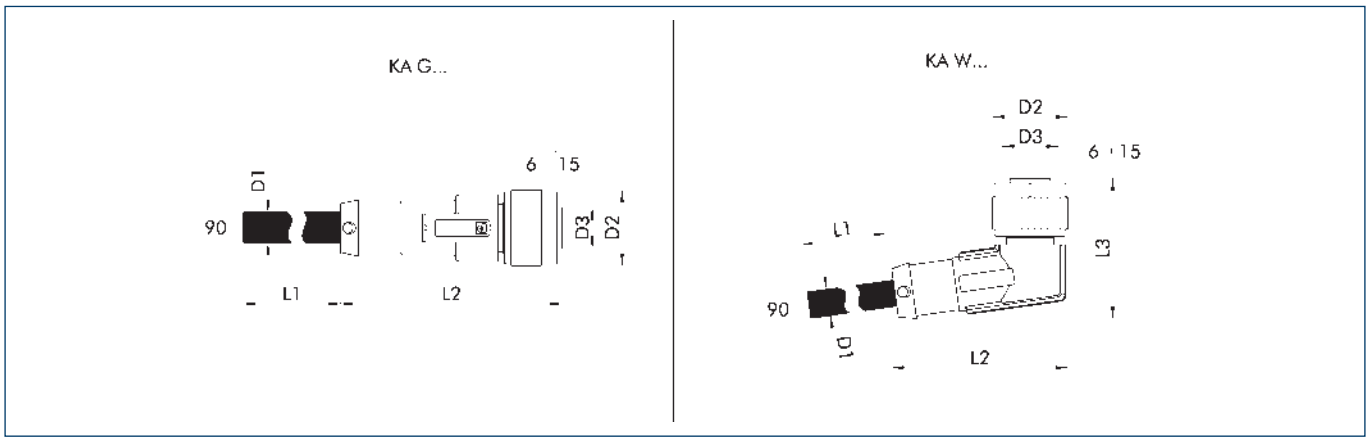

KA G...	Connection cable with straight plug connector	(6) Connection module side	(90) Cable end with open wire strands
KA W...	Connection cable with angled plug connector	(15) Socket	

The connection cables are used to control the SCHUNK product.

Description	ID	L1	D1	L2	D2	L3	D3
		[m]	[mm]	[mm]	[mm]	[mm]	
Connection cable actuation – drag chain and torsion compatible							
KA GLN1208-I0-00200-A	1395458	2	6	44	14.8		M12
KA GLN1208-I0-00500-A	1395471	5	6	44	14.8		M12
KA GLN1208-I0-01000-A	1395479	10	6	44	14.8		M12
KA WLN1208-I0-00200-A	1395482	2	6	34.5	14.8	27.4	M12
KA WLN1208-I0-00500-A	1395483	5	6	34.5	14.8	27.4	M12
KA WLN1208-I0-01000-A	1395485	10	6	34.5	14.8	27.4	M12

ⓘ Please observe the min. bending radius for cable track-compatible cables or the max. torsion angle for torsion-compatible cables. These are generally 10 times the cable diameter or +/- 180°/m. Please refer to the product documentation for information about max. cable length and min. wire cross section.

EMH DP 080

Magnetic gripper

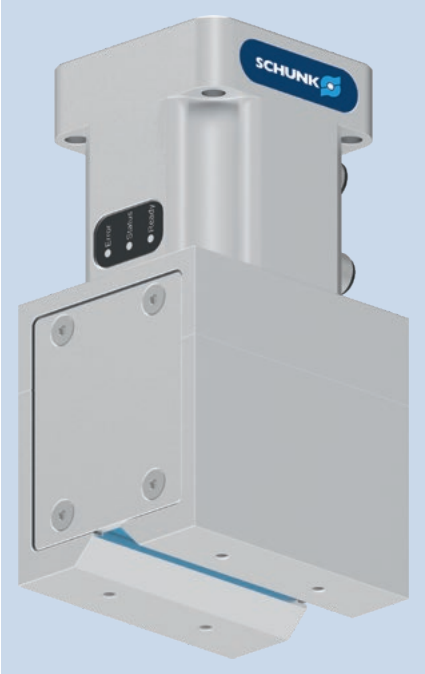

Workpiece thickness

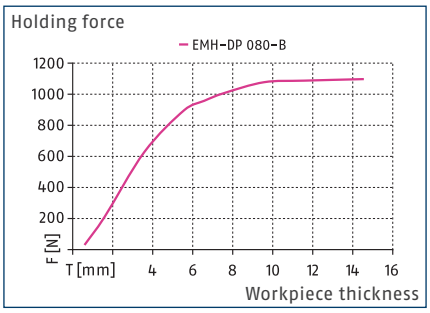

Air gap

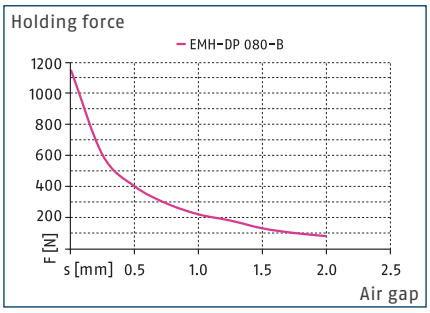

Dimensions and maximum loads

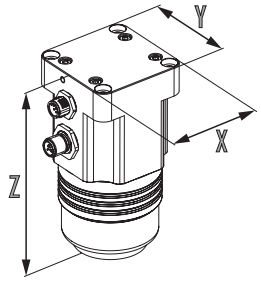

For values see technical data table

Technical data

Description		EMH-DP 080-B
ID		1475116
General operating data		
Holding force	[N]	1140
Magnet area	[cm²]	33.6
Payload for horizontal magnet surface	[kg]	19
Payload for vertical magnet surface	[kg]	7.5
Module temperature increasement in case of 5/15 activations/minute	[°C]	20/50
Activation time	[ms]	500
Min./max. ambient temperature	[°C]	5/50
Mechanical operating data		
Weight	[kg]	3
IP protection class		52
Electrical operating data		
Nominal voltage	[V]	24
Type of voltage		DC
Max. current power	[A]	9
Rated current logic	[A]	0.15
Controller electronics		integrated
Dimensions X x Y x Z	[mm]	80 x 66 x 147

Main view

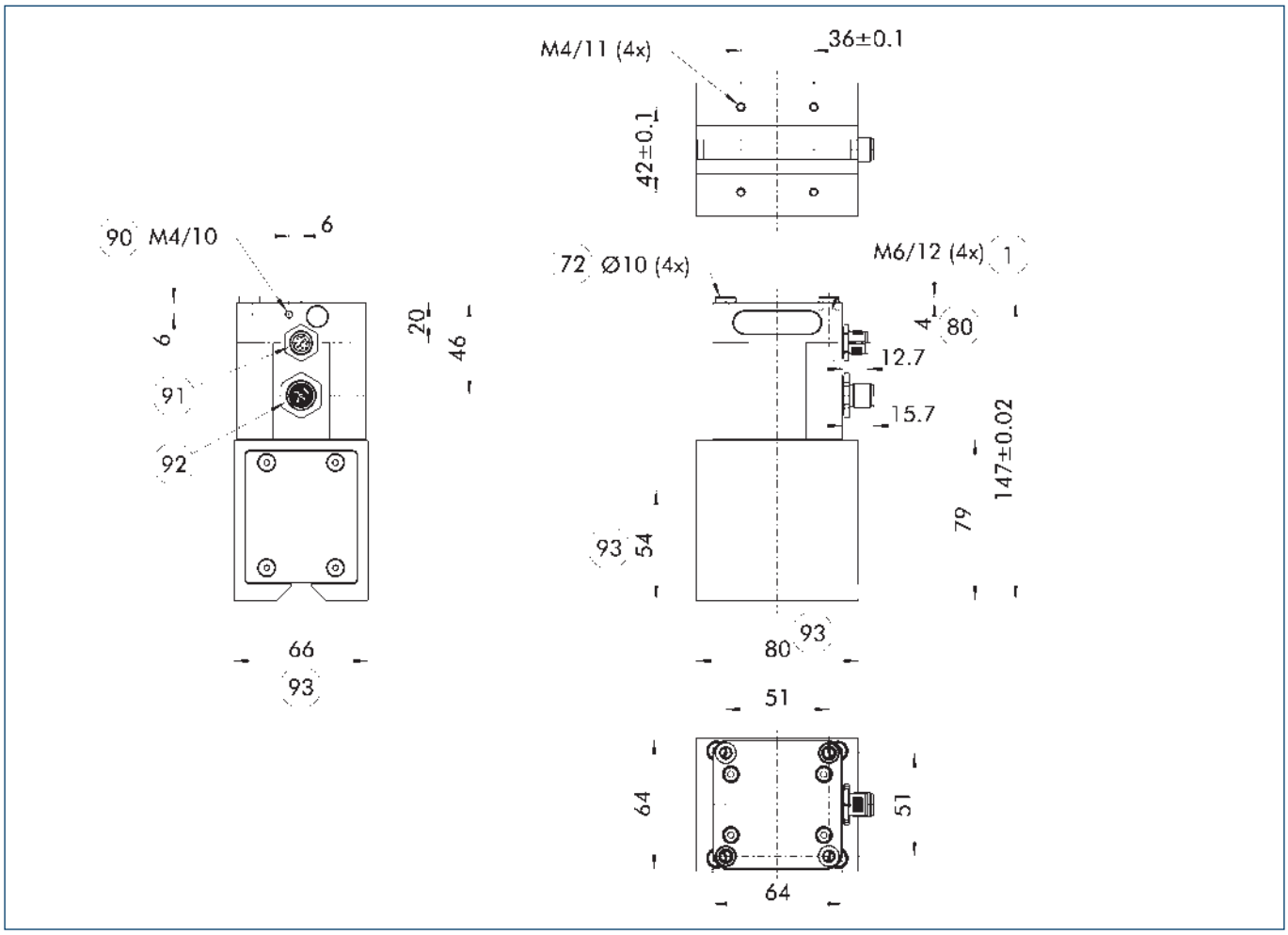

The drawing shows the magnet gripper in basis configuration, without any additional accessories.

- (1) Robot-side connection
- (72) Fit for centering sleeves
- (80) Depth of the centering sleeve hole in the counter part
- (90) Functional ground
- (91) M12-socket, 8-pin (activation)
- (92) M12 connector, T-coded (voltage supply)
- (93) Magnet

Increase in temperature

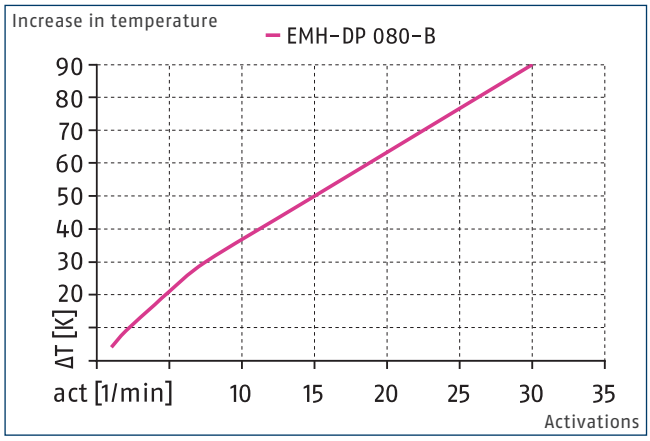

Pole extension

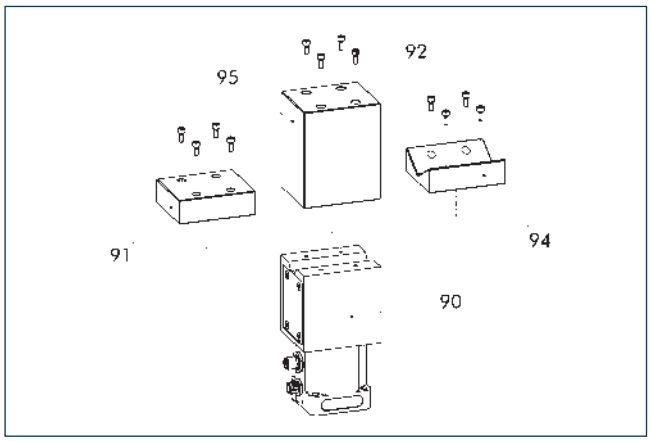

(90) Magnetic gripper EMH
(91) Pole extension PVL EMH-DP-F-B
(92) Screws
(94) Pole extension PVL EMH-DP-P-B
(95) Pole extension PVL EMH-DP-B-B

Pole extensions enable the secure holding of customer-specific workpiece shapes. The pole extensions can be customized to the workpiece to be gripped. The mounting material and centering elements are included in the scope of delivery.

Description	ID	Dimensions L x W x H	Note
		[mm]	
Pole extension			
PVL EMH-DP-B-B	1500647	80/66/100	Customizable
PVL EMH-DP-F-B	1500644	80/66/25	Customizable
PVL EMH-DP-P-B	1500645	80/66/25	Workpiece Ø 60 - 90 mm

ⓘ When using pole extensions, the max. payload is reduced by up to 75%.

Adapter flange according to DIN ISO-9409-1-031.5

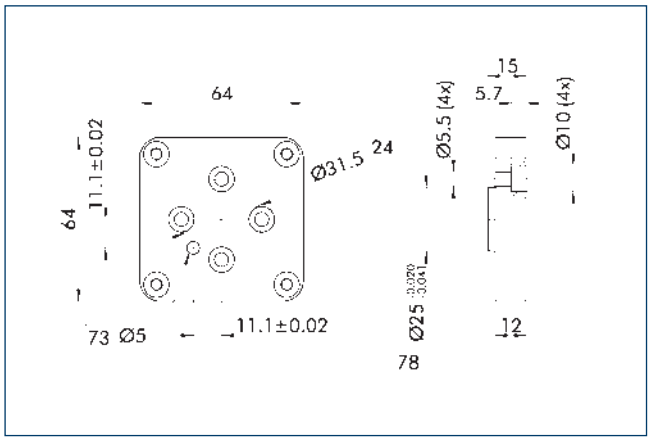

(24) Bolt circle
(73) Fit for centering pins
(78) Fit for centering

Description	ID	
ISO flanges		
ADF-ISO-031.5/EMH	1504083	

Adapter flange according to ISO-9409-1-050

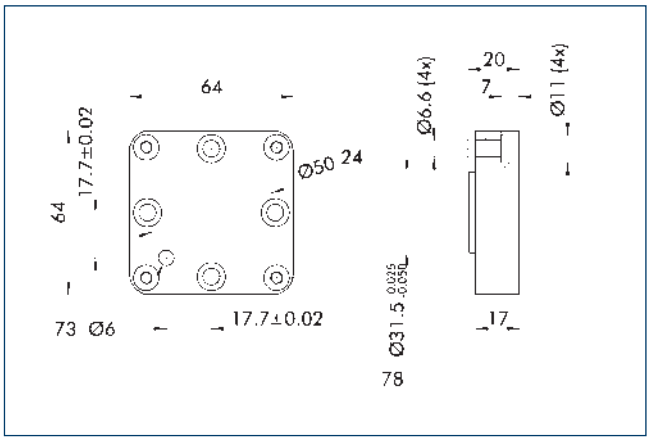

(24) Bolt circle
(73) Fit for centering pins
(78) Fit for centering

Description	ID	
ISO flanges		
ADF-ISO-050/EMH	1504080	

Voltage supply connection cable

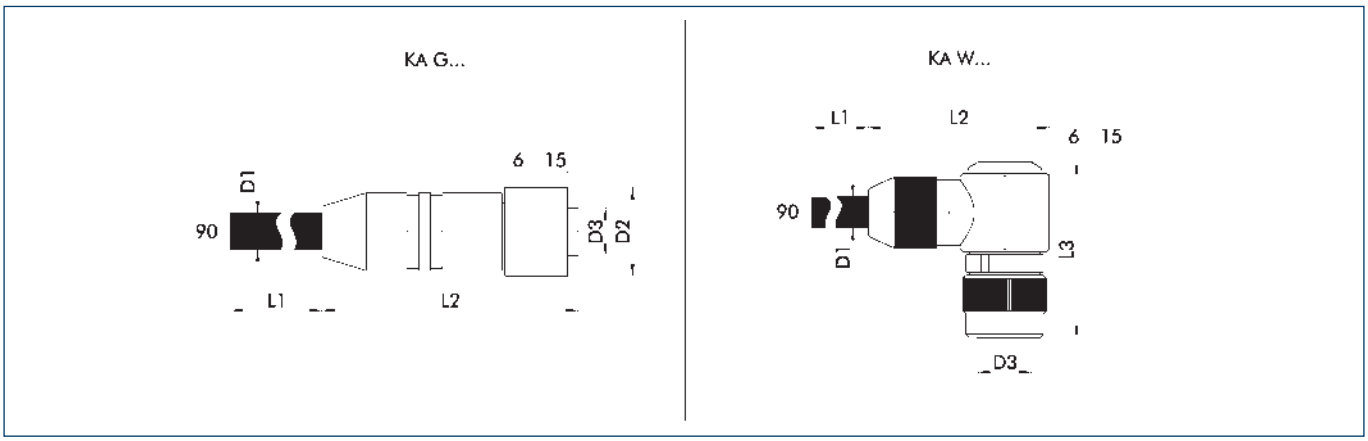

KA G...	Connection cable with straight plug connector	(6) Connection module side	(90) Cable end with open wire strands
KA W...	Connection cable with angled plug connector	(15) Socket	

The connection cables are used to connect the SCHUNK product to the voltage supply.

Description	ID	L1	D1	L2	D2	L3	D3
		[m]	[mm]	[mm]	[mm]	[mm]	
Voltage supply connection cable – cable track compatible							
KA GLN12T0150-LK-00500-A	0310262	5	9.6	51	15		M12 T-coded
KA GLN12T0150-LK-01000-A	0310264	10	9.6	51	15		M12 T-coded
KA WLN12T0150-LK-00500-A	0310263	5	9.6	47.5		35	M12 T-coded
KA WLN12T0150-LK-01000-A	0310265	10	9.6	47.5		35	M12 T-coded

ⓘ Please observe the min. bending radius for cable track-compatible cables or the max. torsion angle for torsion-compatible cables. These are generally 10 times the cable diameter or +/- 180°/m. Please refer to the product documentation for information about max. cable length and min. wire cross section.

Power supply plug-in connector

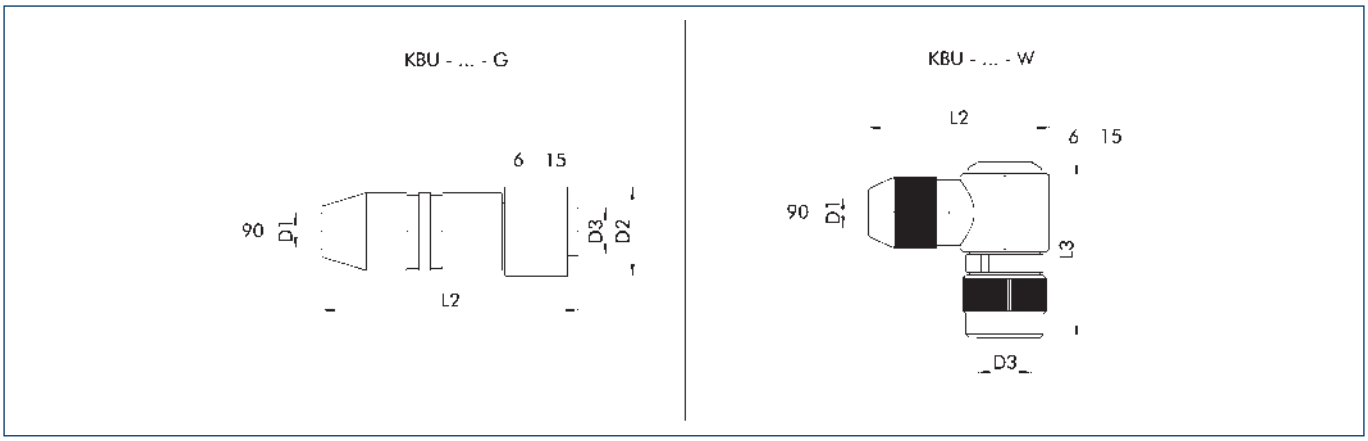

KBU – ... – G	Socket with straight outlet	(6) Connection module side	(90) D1 – max. diameter connection cable
KBU – ... – W	Socket with angular outlet	(15) Socket	

The plug connectors are used to connect the SCHUNK product to the voltage supply. A customer cable can be used for this. The individual wire strands are clamped using screw connections in the plug connector.

Description	ID	D1 (max.)	L2	D2	L3	D3
		[mm]	[mm]	[mm]	[mm]	
Power supply plug-in connector						
KBU-M12T-G 4P	0310260	10	58	20.2		M12 T-coded
KBU-M12T-W 4P	1001514	10	43	20.2	39	M12 T-coded

ⓘ For the connection cable, a cross-section for each individual wire strand of 1.5 mm2 is recommended. Please refer to the product documentation for information about max. cable length and min. wire cross section.

Connection cable for control

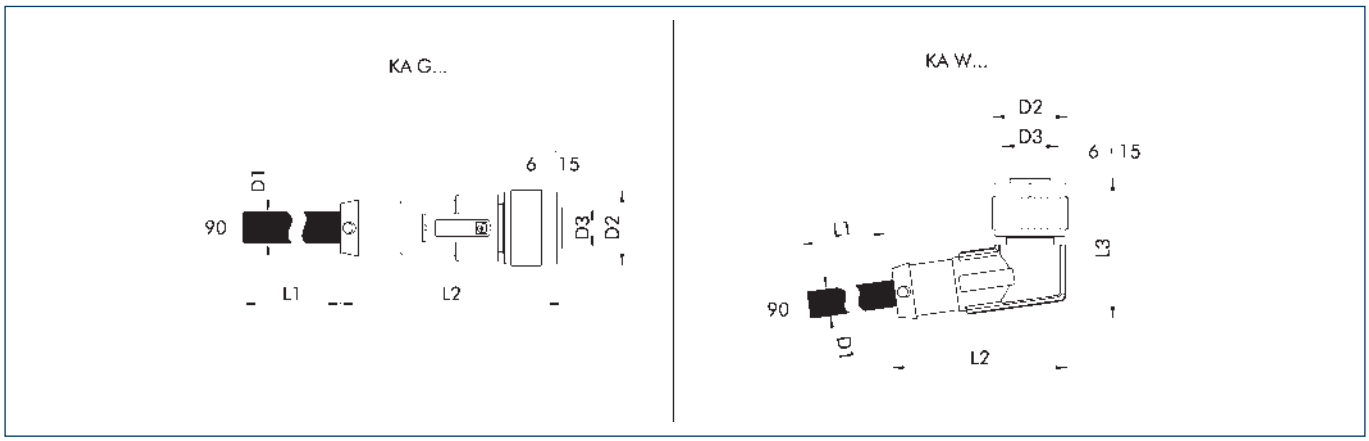

KA G...	Connection cable with straight plug connector	(6) Connection module side	(90) Cable end with open wire strands
KA W...	Connection cable with angled plug connector	(15) Socket	

The connection cables are used to control the SCHUNK product.

Description	ID	L1	D1	L2	D2	L3	D3
		[m]	[mm]	[mm]	[mm]	[mm]	
Connection cable actuation – drag chain and torsion compatible							
KA GLN1208-I0-00200-A	1395458	2	6	44	14.8		M12
KA GLN1208-I0-00500-A	1395471	5	6	44	14.8		M12
KA GLN1208-I0-01000-A	1395479	10	6	44	14.8		M12
KA WLN1208-I0-00200-A	1395482	2	6	34.5	14.8	27.4	M12
KA WLN1208-I0-00500-A	1395483	5	6	34.5	14.8	27.4	M12
KA WLN1208-I0-01000-A	1395485	10	6	34.5	14.8	27.4	M12

ⓘ Please observe the min. bending radius for cable track-compatible cables or the max. torsion angle for torsion-compatible cables. These are generally 10 times the cable diameter or +/- 180°/m. Please refer to the product documentation for information about max. cable length and min. wire cross section.

SCHUNK GmbH & Co. KG
Spann- und Greiftechnik

Bahnhofstr. 106 - 134
D-74348 Lauffen/Neckar
Tel. +49-7133-103-0
Fax +49-7133-103-2399
info@de.schunk.com
schunk.com

Folgen Sie uns | *Follow us*

2023-10-16 © 2023 SCHUNK GmbH & Co. KG