Superior Clamping and Gripping

Product data sheet

Radial gripper DRG

Fully encapsulated. Narrower. More flexible.

Sealed gripper DRG

Sealed 180° angular gripper for the use in contaminated environments

Field of application

For applications requiring a large opening range. Particularly suitable for the use in dirty environments.

Advantages – Your benefits

Completely sealed gripper version allows applications in dirty environments

Air supply via hose-free direct connection or screw connections for flexible pressure supply in all automated systems

Equipped with gripping force maintenance device ensuring that the workpiece stays gripped in case of power drop

Opening angle adjustable from 20° to 180° for a versatile field of applications

Kinematics Slotted link gear for centric gripping with large opening/closing movements

Sizes	Weight	Gripping moment	Angle per jaw	Workpiece weight
Quantity: 5	0.5 .. 4.46 kg	8.2 .. 144.4 Nm	90°	0.9 .. 7.2 kg

Functional description

The round piston is pushed upwards or downwards with compressed air.
In the process, the two pins of the slotted link gear move in unison and relative to the groove in the top jaws. In the gripping moment, these two pins reach the largest lever arm.

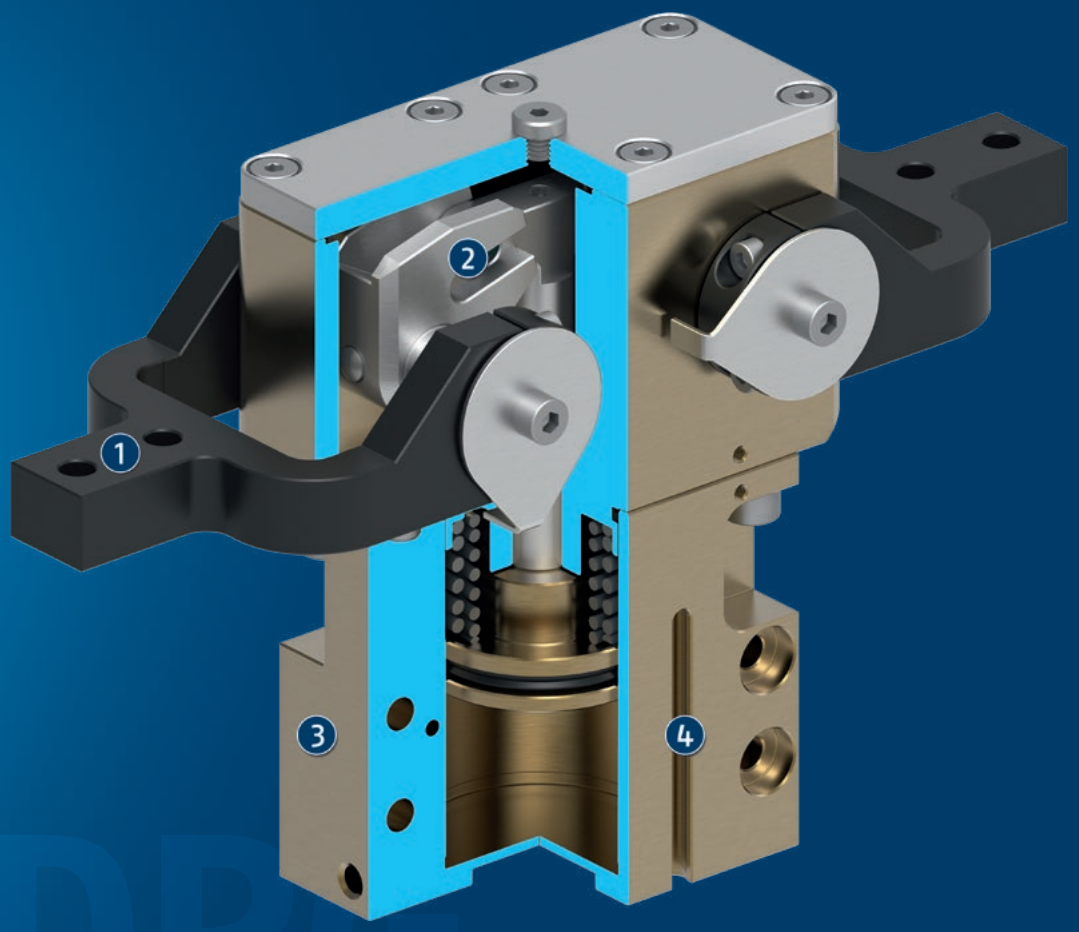

① **Base fingers**
for the connection of workpiece-specific gripper fingers

② **Kinematics**
Slotted link gear for centric gripping with large opening/closing movements

③ **Housing**
is weight-optimized due to the use of high-strength aluminum alloy

④ **Position monitoring**
with C-slot switch

General notes about the series

Operating principle: Wedge-hook kinematics

Housing material: Aluminum alloy, anodized

Base jaw material: Steel

Actuation: pneumatic, with filtered compressed air as per ISO 8573-1:2010 [7:4:4].

Warranty: 24 months

Service life characteristics: on request

Scope of delivery: Gripper in the ordered variant, accessory kit (centering sleeves, O-rings for direct connection/detailed contents see operating manual) and safety information. Product-specific instructions can be downloaded at schunk.com/downloads-manuals.

Gripping force maintenance: always integrated by using springs, and also possible via pressure maintenance valve SDV-P

Closing moment: is the arithmetic sum of the individual moment applied to each jaw.
The indicated closing moment will be reached at an opening angle of 0°. A detailed closing moment course depending on the opening angle can be taken out of the diagram "closing moment course".

Finger length: is measured from the reference surface as the distance P in direction to the main axis.

Repeat accuracy: is defined as a distribution of the end Position for 100 consecutive strokes.

Workpiece weight: is calculated for force-fit gripping with a coefficient of static friction of 0.1 and a safety factor of 2 against workpiece slippage at acceleration due to gravity g. For form-fit or capture gripping, there are significantly higher permissible workpiece weights.

Closing and opening times: are movement times of the base jaws only, without application-specific gripper fingers. Valve switching times, hose fill times, or PLC reaction times are not included, and are to be considered when cycle times are calculated.

Application example

Loading unit for gripping and swiveling round workpieces. No vertical stroke is required due to the radial movement of the gripper fingers.

1. Sealed 2-finger radial gripper DRG
2. Rotary actuator SRU-plus
3. Delta flat linear module

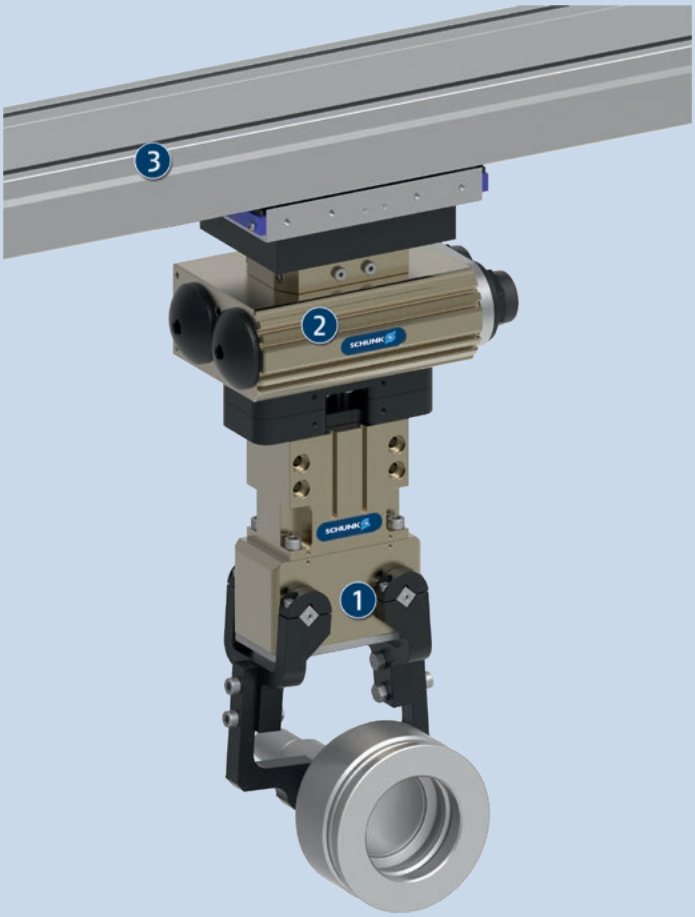

SCHUNK offers more ...

The following components make the product even more productive – the suitable addition for the highest functionality, flexibility, reliability, and controlled production.

Universal swivel unit

Linear module

Quick change system

Compensation unit

Inductive proximity switch

Magnetic switches

Pressure maintenance valve

ⓘ For more information on these products can be found on the following product pages or at schunk.com.

Options and special information

180° radial grippers are advantageous since further stroke motions are no more necessary. Since every jaw swivels away by 90°, the gripper is outside of the working area, and a stroke motion back of the whole gripper is no more necessary.
Gripping force maintenance version AS/IS: The mechanical gripping force maintenance version ensures minimum gripping force even in the event of a pressure drop. In the AS/S version this acts as a closing force, in the IS version as an opening force.
High-temperature version V/HT: for use in hot environments
Additional versions: Various options can be combined with each other. Numerous additional options are also available – just tell us what your task is!
Food-grade lubrication: The product contains food-compliant lubricants as standard. The requirements of EN 1672-2:2020 are not fully met. The relevant NSF certificates are available at https://info.nsf.org/USDA/Listings.asp using the lubricant information in the operating manual.

DRG 44

Radial gripper

Gripping force O.D. gripping

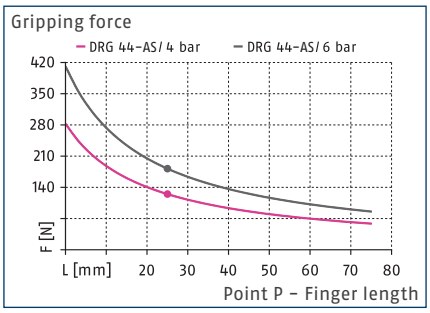

Closing moment curve

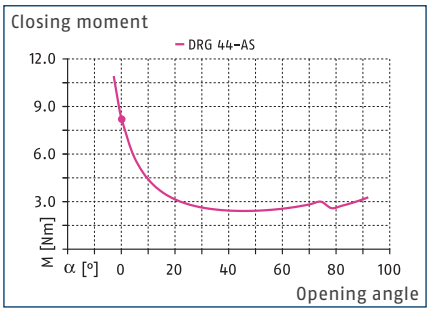

Dimensions and maximum loads

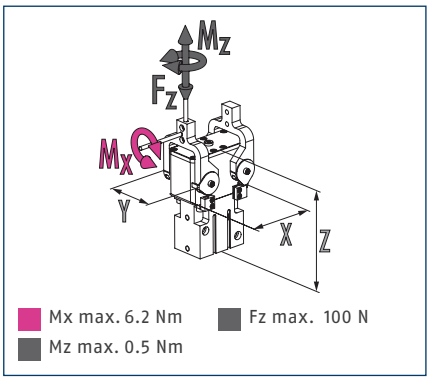

ⓘ The indicated torques and forces are static values, apply for each base jaw, and may occur simultaneously.

Technical data

Description		DRG 44-90-AS
ID		0307106
Opening angle per jaw	[°]	90
Closed angle per jaw	[°]	1.5
Closing moment	[Nm]	8.2
Closing moment generated by spring	[Nm]	1.8
Weight	[kg]	0.5
Recommended workpiece weight	[kg]	0.9
Cylinder volume per double stroke	[cm³]	16
Min./nom./max. operating pressure	[bar]	4/6/6.5
Closing/opening time	[s]	0.4/0.5
Closing time with spring only	[s]	0.45
Max. permissible finger length	[mm]	50
Max. permissible weight per finger	[kg]	0.09
IP protection class		67
Min./max. ambient temperature	[°C]	5/90
Repeat accuracy	[mm]	0.1
Dimensions X x Y x Z	[mm]	60 x 45.4 x 86.5
Options and their characteristics		
High-temperature version		39307106
Min./max. ambient temperature	[°C]	5/130

ⓘ The opening angle of the base jaws can be limited.

Main view

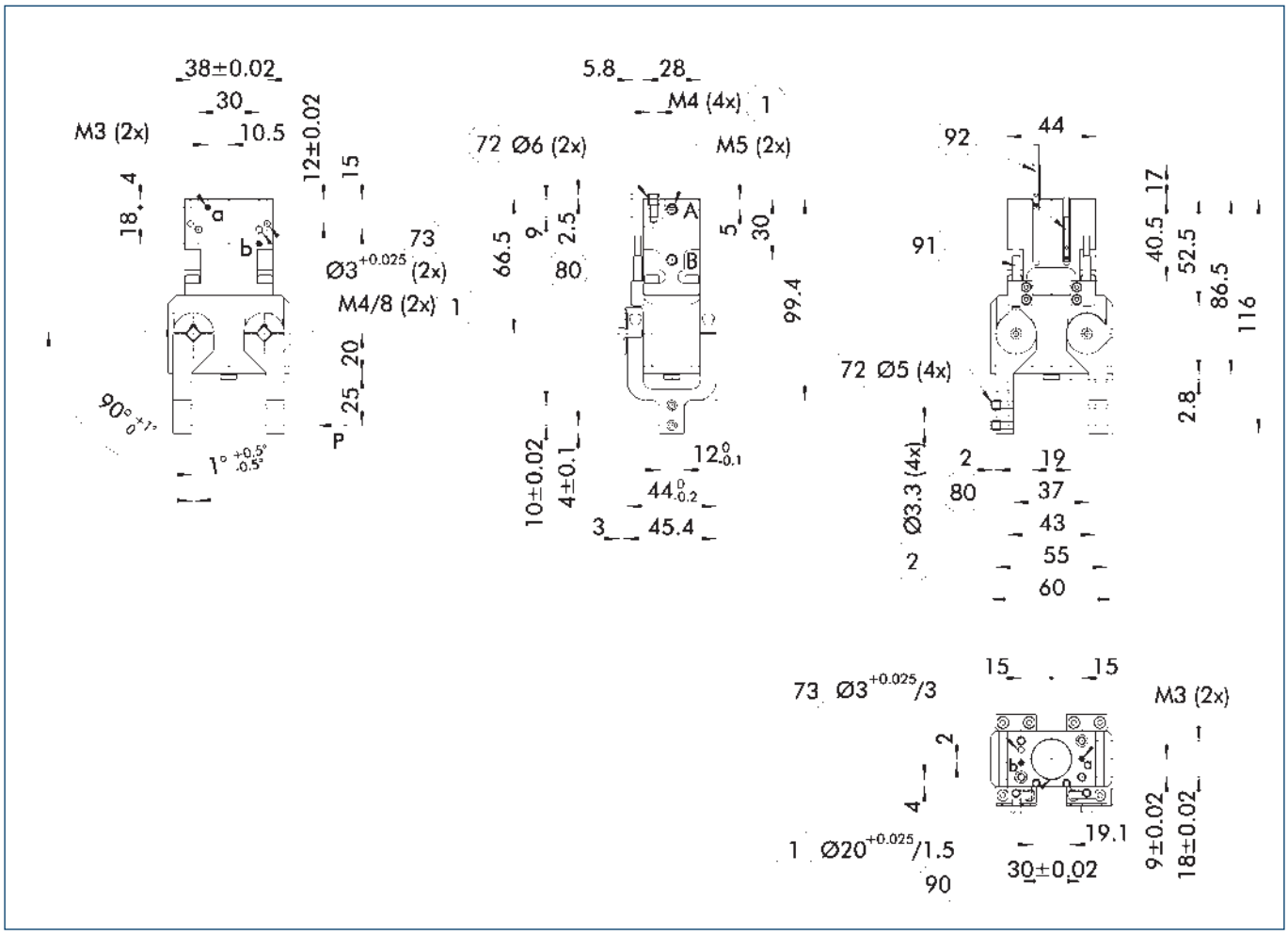

The drawing shows the gripper in the basic version with closed jaws, without dimensional consideration of the options described below.

ⓘ The SDV-P pressure maintenance valve can be used as a gripping force maintenance device (see catalog section on accessories).

A, a Main / direct connection, gripper opening

B, b Main / direct connection, gripper closing

(1) Gripper connection

(2) Finger connection

(72) Fit for centering sleeves

(73) Fit for centering pins

(80) Depth of the centering sleeve hole in the counter part

(90) Depth of centering collar

(91) Sensor IN ...

(92) Sensor MMS 22..

Maximum permitted finger projection

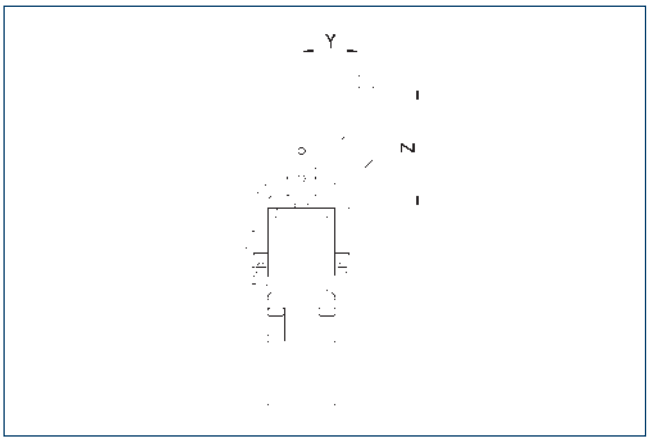

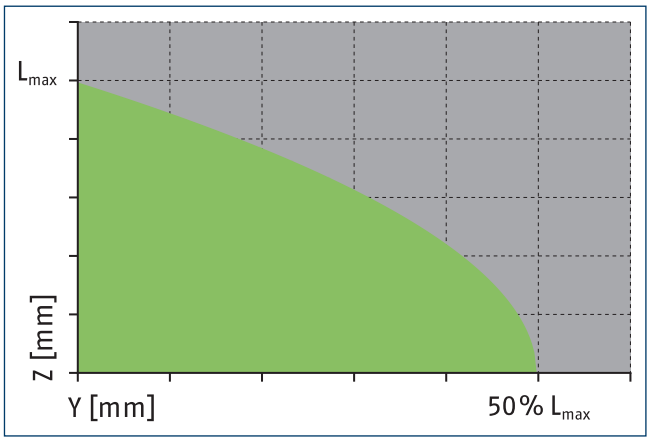

Permitted range Inadmissible range

Lmax is equivalent to the maximum permitted finger length, see the technical data table.

Hose-free direct connection M3

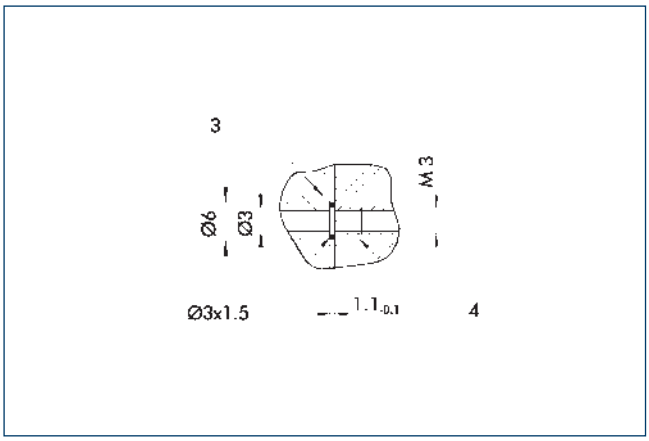

(3) Adapter (4) Grippers

The direct connection is used for supplying compressed air without hoses. Instead, the pressure medium is fed through bore-holes in the mounting plate.

SDV-P pressure maintenance valve

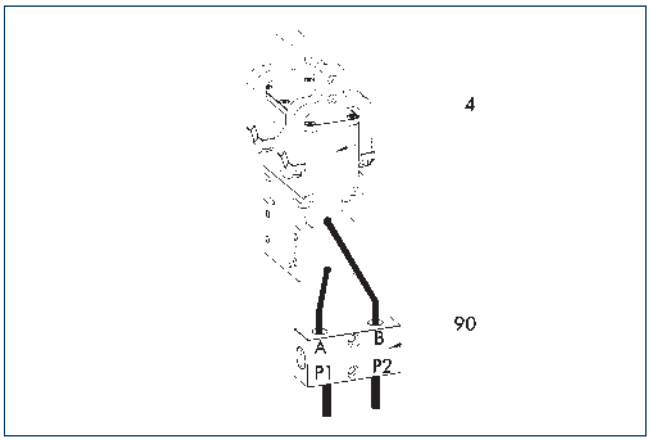

(4) Grippers (90) SDV-P pressure maintenance valve

The SDV-P pressure maintenance valve ensures in emergency STOP situations that the pressure in the piston chamber of pneumatic gripper, swivel, linear, and quick-change modules is temporarily maintained.

Description	ID	Recommended hose diameter
		[mm]
Pressure maintenance valve		
SDV-P 04	0403130	6
Pressure maintenance valve with air bleed screw		
SDV-P 04-E	0300120	6

ⓘ In order to achieve the specified closing and opening time for each gripper variant, the recommended hose diameter must be used. The direct allocation of the respective variant of the gripper for the respective SDV-P can be found at schunk.com.

Attachment kit for proximity switch

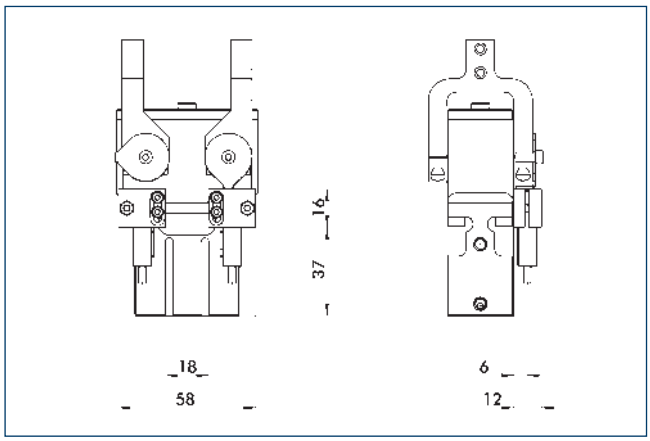

The attachment kit consists of brackets and the appropriate fastening materials. The proximity switches must be ordered separately.

Description	ID	
Attachment kit for proximity switch		
AS-DRG-44-80	0304131	

ⓘ This attachment kit needs to be ordered optionally as an accessory.

Inductive proximity switches

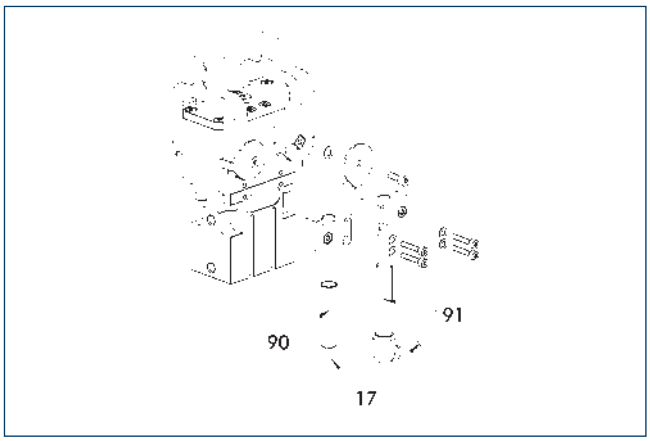

(17) Cable outlet
(90) Sensor IN ...
(91) Sensor IN..-SA

End position monitoring can be mounted with an attachment kit.

Description	ID	Often combined
Attachment kit for proximity switch		
AS-DRG-44-80	0304131	
Inductive proximity switch		
IN 80-S-M12	0301578	
IN 80-S-M8	0301478	●
INK 80-S	0301550	
Inductive proximity switch with lateral cable outlet		
IN 80-S-M12-SA	0301587	
IN 80-S-M8-SA	0301483	●
INK 80-S-SA	0301566	

ⓘ Two sensors (closer/S) are required for each unit and extension cables are available as an option. This attachment kit needs to be ordered optionally as an accessory. For sensor cables, note the minimum permissible bending radii. These are generally 35 mm.

Inductive proximity switches

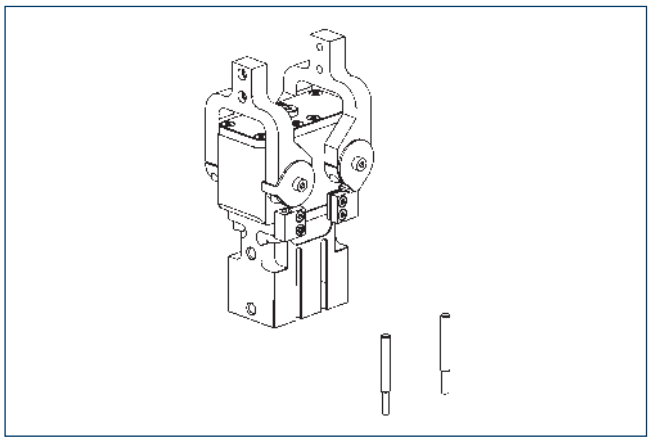

Directly mounted end position monitoring.

Description	ID	Often combined
Inductive proximity switch		
IN 40-S-M12	0301574	
IN 40-S-M8	0301474	●
INK 40-S	0301555	
Connection cables		
KA BG08-L 3P-0300-PNP	0301622	●
KA BG08-L 3P-0500-PNP	0301623	
KA BG12-L 3P-0500-PNP	30016369	
KA BW08-L 3P-0300-PNP	0301594	
KA BW08-L 3P-0500-PNP	0301502	
KA BW12-L 3P-0300-PNP	0301503	
KA BW12-L 3P-0500-PNP	0301507	
Clip for connector/socket		
CLI-M12	0301464	
CLI-M8	0301463	
Cable extension		
KV BG12-SG12 3P-0030-PNP	0301999	
KV BG12-SG12 3P-0060-PNP	0301998	
KV BW08-SG08 3P-0030-PNP	0301495	
KV BW08-SG08 3P-0100-PNP	0301496	
KV BW08-SG08 3P-0200-PNP	0301497	●
KV BW12-SG12 3P-0030-PNP	0301595	
KV BW12-SG12 3P-0100-PNP	0301596	
KV BW12-SG12 3P-0200-PNP	0301597	
Sensor distributor		
V2-M12	0301776	●
V2-M8	0301775	●
V4-M8	0301746	
V8-M8	0301751	

ⓘ Two sensors are required per unit for monitoring two positions. On option, extension cables and sensor distributors are available. Additional product variants of the sensor, and further information and technical data can be found in the catalog chapter sensor system.

Electronic magnetic switch MMS

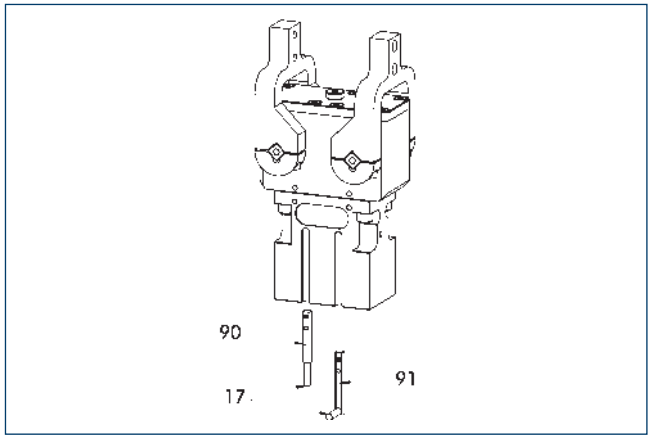

(17) Cable outlet
(90) Sensor MMS 22..
(91) Sensor MMS 22...-SA

End position monitoring for mounting in the C-slot.

Description	ID	Often combined
Electronic magnetic switch		
MMS 22-S-M8-PNP	0301032	●
MMSK 22-S-PNP	0301034	
Electronic magnetic switches with lateral cable outlet		
MMS 22-S-M8-PNP-SA	0301042	●
MMSK 22-S-PNP-SA	0301044	
Connection cables		
KA BG08-L 3P-0300-PNP	0301622	●
KA BG08-L 3P-0500-PNP	0301623	
KA BW08-L 3P-0300-PNP	0301594	
KA BW08-L 3P-0500-PNP	0301502	
Clip for connector/socket		
CLI-M8	0301463	
Cable extension		
KV BW08-SG08 3P-0030-PNP	0301495	
KV BW08-SG08 3P-0100-PNP	0301496	
KV BW08-SG08 3P-0200-PNP	0301497	●
Sensor distributor		
V2-M8	0301775	●
V4-M8	0301746	
V8-M8	0301751	

ⓘ Two sensors are required per unit for monitoring two positions. On option, extension cables and sensor distributors are available. Additional product variants of the sensor, and further information and technical data can be found in the catalog chapter sensor system.

DRG 54

Radial gripper

Gripping force O.D. gripping

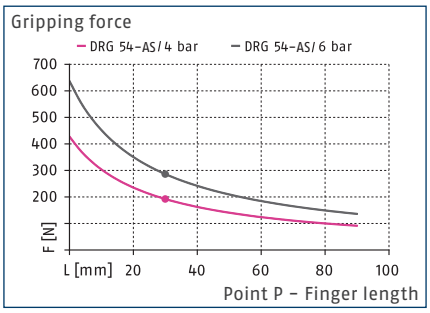

Closing moment curve

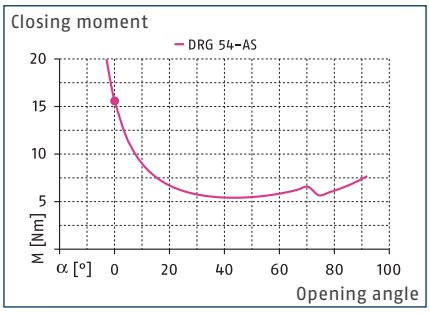

Dimensions and maximum loads

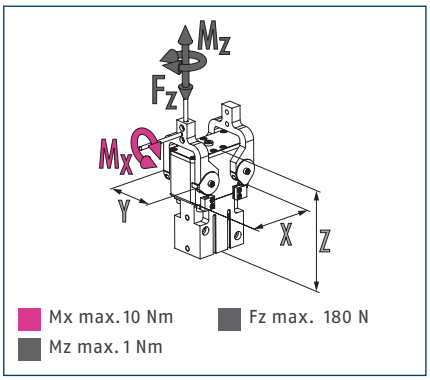

ⓘ The indicated torques and forces are static values, apply for each base jaw, and may occur simultaneously.

Technical data

Description		DRG 54-90-AS
ID		0307107
Opening angle per jaw	[°]	90
Closed angle per jaw	[°]	1.5
Closing moment	[Nm]	15.6
Closing moment generated by spring	[Nm]	2.8
Weight	[kg]	0.77
Recommended workpiece weight	[kg]	1.5
Cylinder volume per double stroke	[cm³]	36
Min./nom./max. operating pressure	[bar]	4/6/6.5
Closing/opening time	[s]	0.4/0.5
Closing time with spring only	[s]	0.60
Max. permissible finger length	[mm]	60
Max. permissible weight per finger	[kg]	0.15
IP protection class		67
Min./max. ambient temperature	[°C]	5/90
Repeat accuracy	[mm]	0.1
Dimensions X x Y x Z	[mm]	70 x 52.4 x 101.5
Options and their characteristics		
High-temperature version		39307107
Min./max. ambient temperature	[°C]	5/130

ⓘ The opening angle of the base jaws can be limited.

Main view

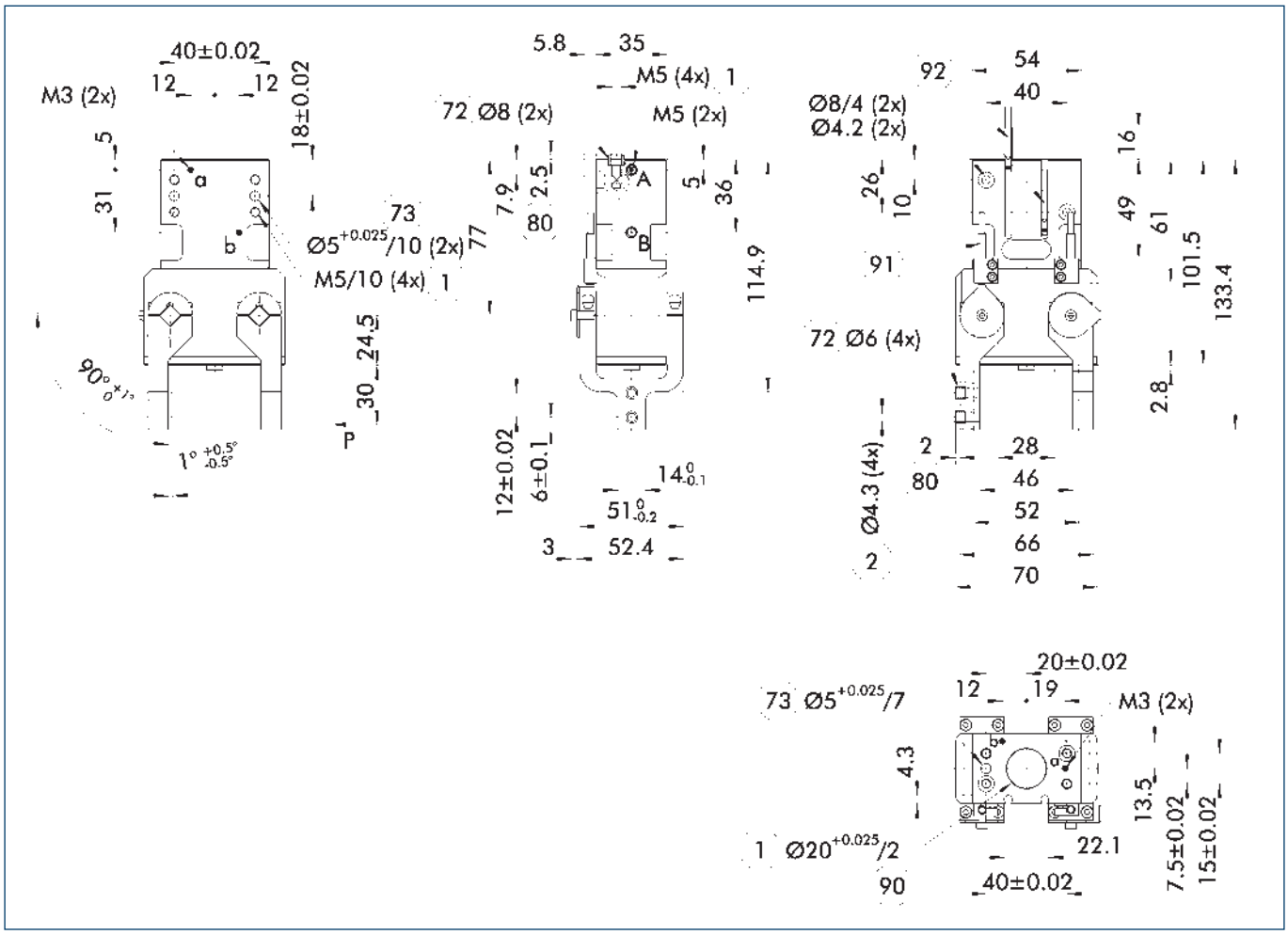

The drawing shows the gripper in the basic version with closed jaws, without dimensional consideration of the options described below.

ⓘ The SDV-P pressure maintenance valve can be used as a gripping force maintenance device (see catalog section on accessories).

A, a Main / direct connection, gripper opening

B, b Main / direct connection, gripper closing

(1) Gripper connection

(2) Finger connection

(72) Fit for centering sleeves

(73) Fit for centering pins

(80) Depth of the centering sleeve hole in the counter part

(90) Depth of centering collar

(91) Sensor IN ...

(92) Sensor MMS 22..

Maximum permitted finger projection

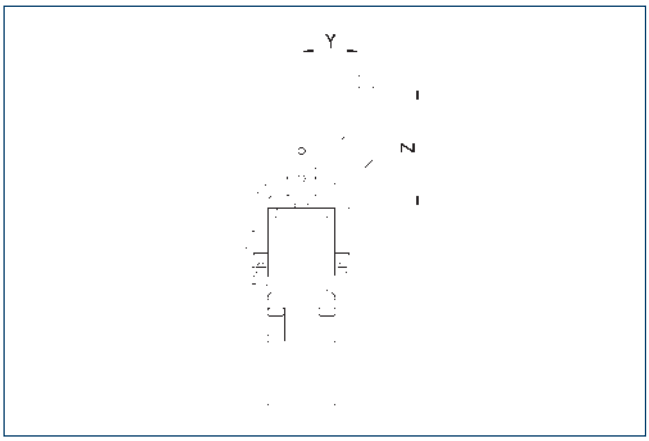

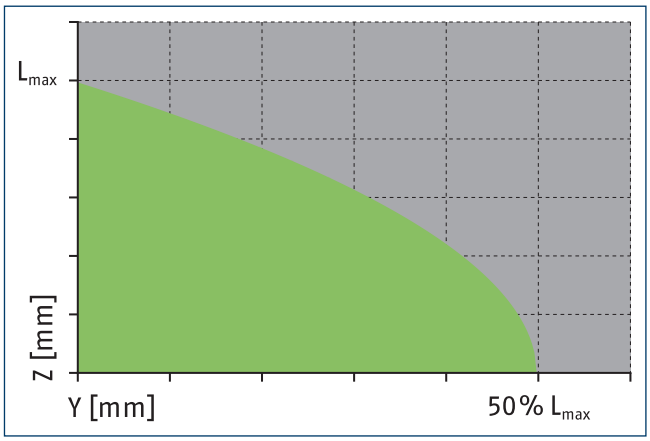

Permitted range Inadmissible range

Lmax is equivalent to the maximum permitted finger length, see the technical data table.

Hose-free direct connection M3

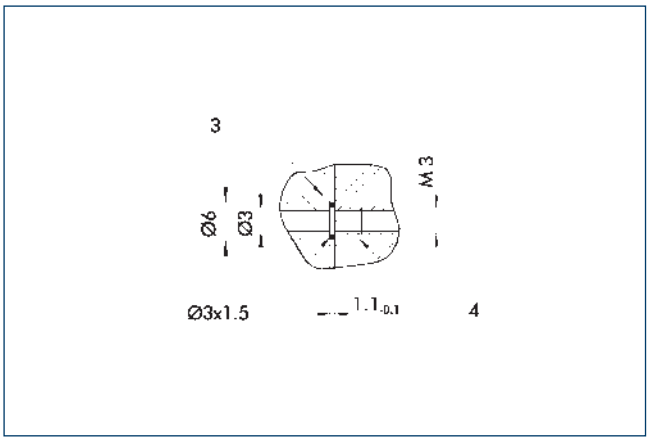

(3) Adapter (4) Grippers

The direct connection is used for supplying compressed air without hoses. Instead, the pressure medium is fed through bore-holes in the mounting plate.

SDV-P pressure maintenance valve

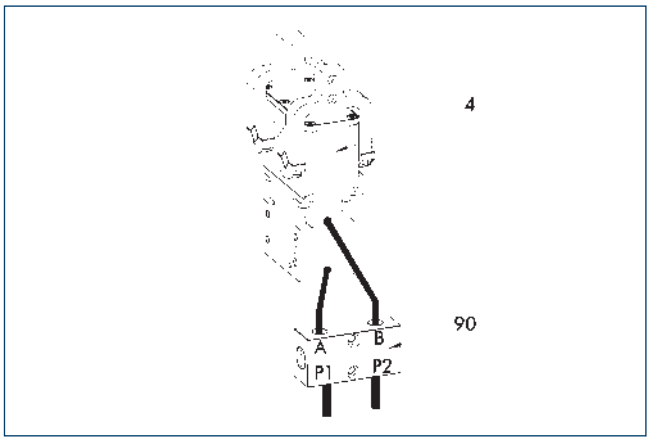

(4) Grippers (90) SDV-P pressure maintenance valve

The SDV-P pressure maintenance valve ensures in emergency STOP situations that the pressure in the piston chamber of pneumatic gripper, swivel, linear, and quick-change modules is temporarily maintained.

Description	ID	Recommended hose diameter
		[mm]
Pressure maintenance valve		
SDV-P 04	0403130	6
Pressure maintenance valve with air bleed screw		
SDV-P 04-E	0300120	6

ⓘ In order to achieve the specified closing and opening time for each gripper variant, the recommended hose diameter must be used. The direct allocation of the respective variant of the gripper for the respective SDV-P can be found at schunk.com.

Attachment kit for proximity switch

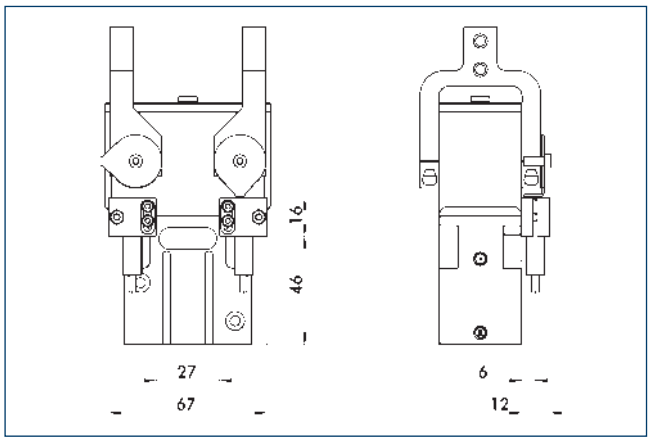

End position monitoring can be mounted with an attachment kit.

Description	ID	
Attachment kit for proximity switch		
AS-DRG-44-80	0304131	

ⓘ This attachment kit needs to be ordered optionally as an accessory.

Inductive proximity switches

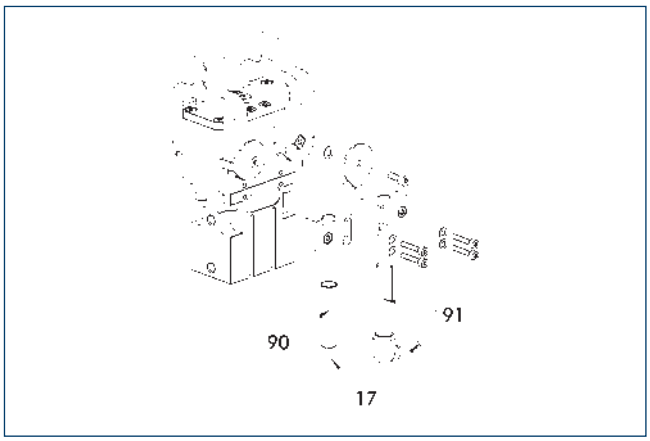

(17) Cable outlet
(91) Sensor IN..-SA
(90) Sensor IN ...

End position monitoring can be mounted with an attachment kit.

Description	ID	Often combined
Attachment kit for proximity switch		
AS-DRG-44-80	0304131	
Inductive proximity switch		
IN 80-S-M12	0301578	
IN 80-S-M8	0301478	●
INK 80-S	0301550	
Inductive proximity switch with lateral cable outlet		
IN 80-S-M12-SA	0301587	
IN 80-S-M8-SA	0301483	●
INK 80-S-SA	0301566	

ⓘ Two sensors (closer/S) are required for each unit and extension cables are available as an option. This attachment kit needs to be ordered optionally as an accessory. For sensor cables, note the minimum permissible bending radii. These are generally 35 mm.

Inductive proximity switches

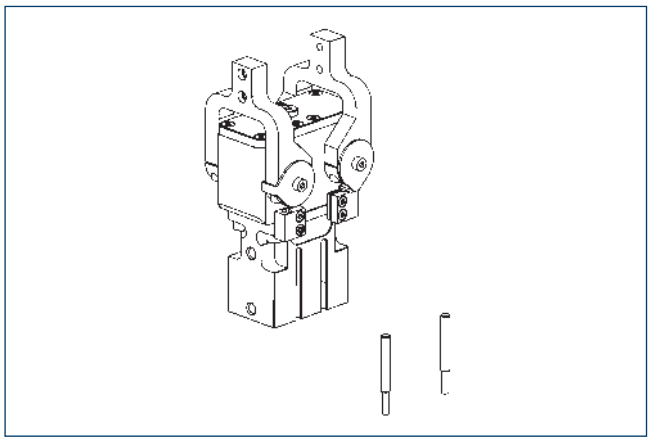

Directly mounted end position monitoring.

Description	ID	Often combined
Inductive proximity switch		
IN 40-S-M12	0301574	
IN 40-S-M8	0301474	●
INK 40-S	0301555	
Connection cables		
KA BG08-L 3P-0300-PNP	0301622	●
KA BG08-L 3P-0500-PNP	0301623	
KA BG12-L 3P-0500-PNP	30016369	
KA BW08-L 3P-0300-PNP	0301594	
KA BW08-L 3P-0500-PNP	0301502	
KA BW12-L 3P-0300-PNP	0301503	
KA BW12-L 3P-0500-PNP	0301507	
Clip for connector/socket		
CLI-M12	0301464	
CLI-M8	0301463	
Cable extension		
KV BG12-SG12 3P-0030-PNP	0301999	
KV BG12-SG12 3P-0060-PNP	0301998	
KV BW08-SG08 3P-0030-PNP	0301495	
KV BW08-SG08 3P-0100-PNP	0301496	
KV BW08-SG08 3P-0200-PNP	0301497	●
KV BW12-SG12 3P-0030-PNP	0301595	
KV BW12-SG12 3P-0100-PNP	0301596	
KV BW12-SG12 3P-0200-PNP	0301597	
Sensor distributor		
V2-M12	0301776	●
V2-M8	0301775	●
V4-M8	0301746	
V8-M8	0301751	

ⓘ Two sensors are required per unit for monitoring two positions. On option, extension cables and sensor distributors are available. Additional product variants of the sensor, and further information and technical data can be found in the catalog chapter sensor system.

Electronic magnetic switch MMS

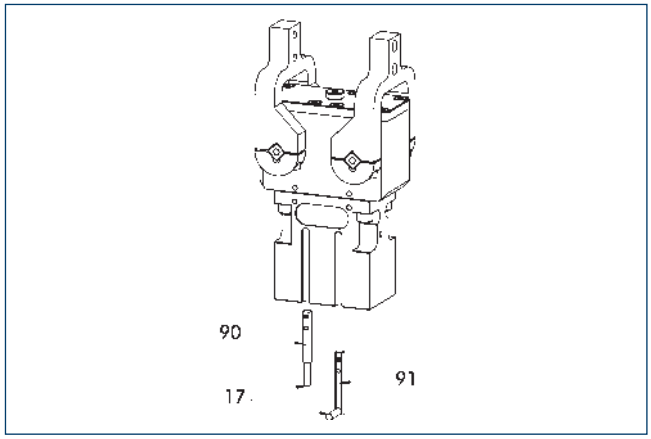

(17) Cable outlet
(90) Sensor MMS 22..
(91) Sensor MMS 22...-SA

End position monitoring for mounting in the C-slot.

Description	ID	Often combined
Electronic magnetic switch		
MMS 22-S-M8-PNP	0301032	●
MMSK 22-S-PNP	0301034	
Electronic magnetic switches with lateral cable outlet		
MMS 22-S-M8-PNP-SA	0301042	●
MMSK 22-S-PNP-SA	0301044	
Connection cables		
KA BG08-L 3P-0300-PNP	0301622	●
KA BG08-L 3P-0500-PNP	0301623	
KA BW08-L 3P-0300-PNP	0301594	
KA BW08-L 3P-0500-PNP	0301502	
Clip for connector/socket		
CLI-M8	0301463	
Cable extension		
KV BW08-SG08 3P-0030-PNP	0301495	
KV BW08-SG08 3P-0100-PNP	0301496	
KV BW08-SG08 3P-0200-PNP	0301497	●
Sensor distributor		
V2-M8	0301775	●
V4-M8	0301746	
V8-M8	0301751	

ⓘ Two sensors are required per unit for monitoring two positions. On option, extension cables and sensor distributors are available. Additional product variants of the sensor, and further information and technical data can be found in the catalog chapter sensor system.

DRG 64

Radial gripper

Gripping force O.D. gripping

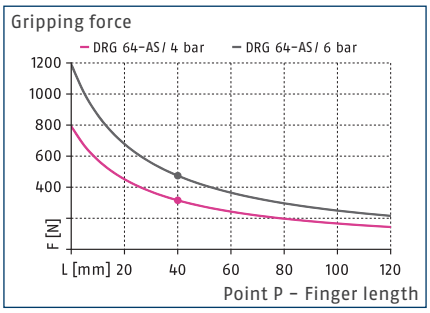

Closing moment curve

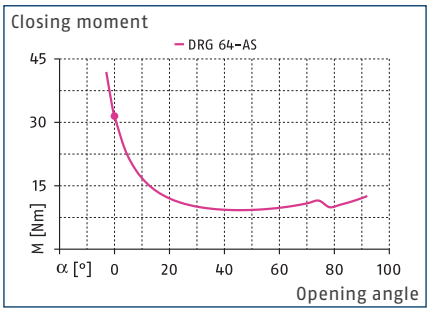

Dimensions and maximum loads

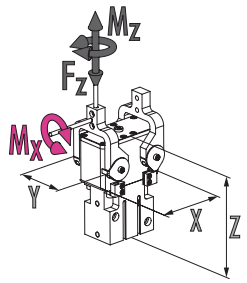

Mx max. 13.5 Nm
Fz max. 280 N
Mz max. 1.3 Nm

ⓘ The indicated torques and forces are static values, apply for each base jaw, and may occur simultaneously.

Technical data

Description		DRG 64-90-AS
ID		0307108
Opening angle per jaw	[°]	90
Closed angle per jaw	[°]	1.5
Closing moment	[Nm]	31.5
Closing moment generated by spring	[Nm]	5.1
Weight	[kg]	1.15
Recommended workpiece weight	[kg]	2.4
Cylinder volume per double stroke	[cm³]	57
Min./nom./max. operating pressure	[bar]	4/6/6.5
Closing/opening time	[s]	0.4/0.8
Closing time with spring only	[s]	0.60
Max. permissible finger length	[mm]	80
Max. permissible weight per finger	[kg]	0.26
IP protection class		67
Min./max. ambient temperature	[°C]	5/90
Repeat accuracy	[mm]	0.1
Dimensions X x Y x Z	[mm]	84 x 57.5 x 115.5
Options and their characteristics		
High-temperature version		39307108
Min./max. ambient temperature	[°C]	5/130

ⓘ The opening angle of the base jaws can be limited.

Main view

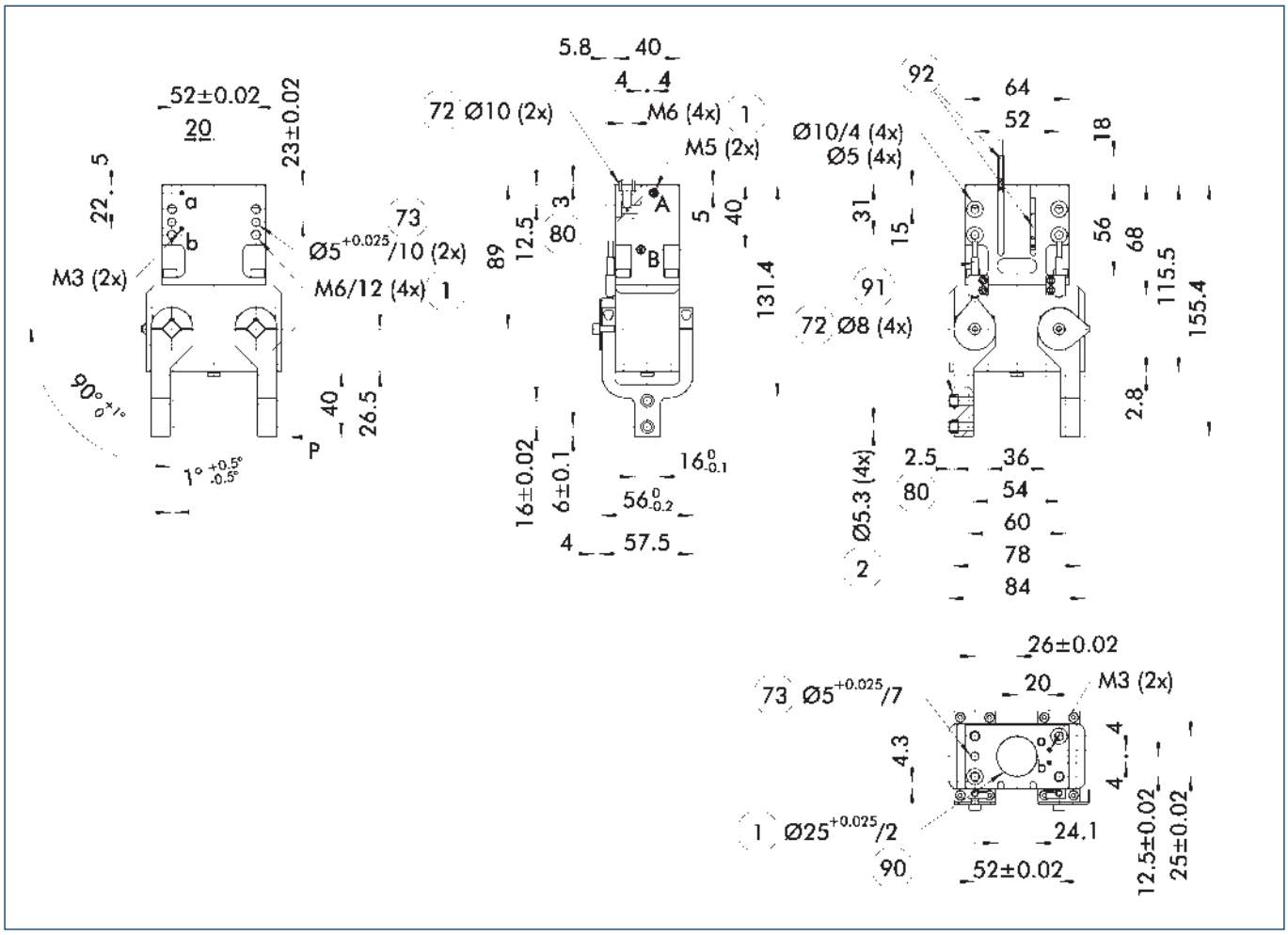

The drawing shows the gripper in the basic version with closed jaws, without dimensional consideration of the options described below.

ⓘ The SDV-P pressure maintenance valve can be used as a gripping force maintenance device (see catalog section on accessories).

A, a Main / direct connection, gripper opening

B, b Main / direct connection, gripper closing

(1) Gripper connection

(2) Finger connection

(72) Fit for centering sleeves

(73) Fit for centering pins

(80) Depth of the centering sleeve hole in the counter part

(90) Depth of centering collar

(91) Sensor IN ...

(92) Sensor MMS 22..

Maximum permitted finger projection

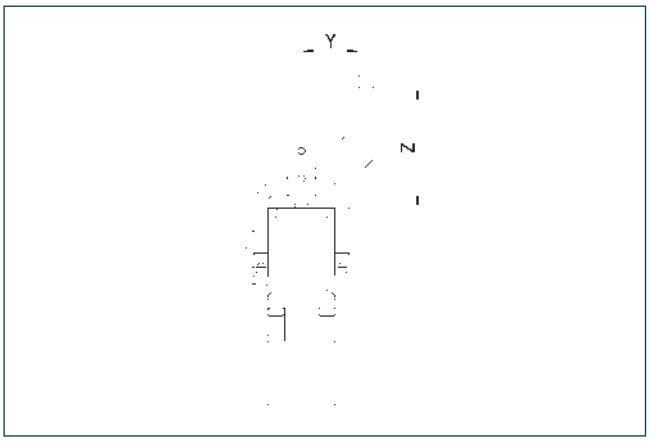

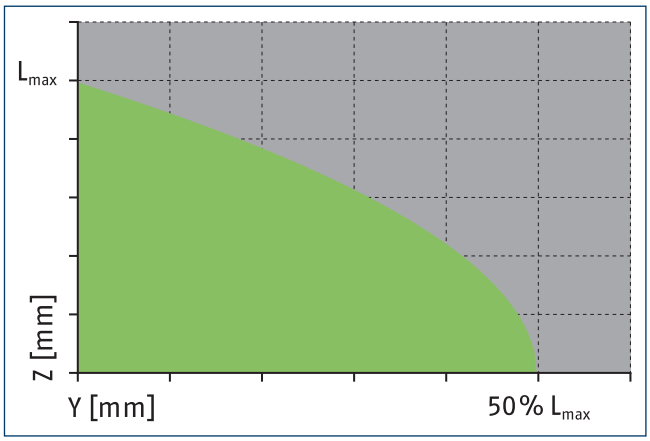

Permitted range Inadmissible range

Lmax is equivalent to the maximum permitted finger length, see the technical data table.

Hose-free direct connection M3

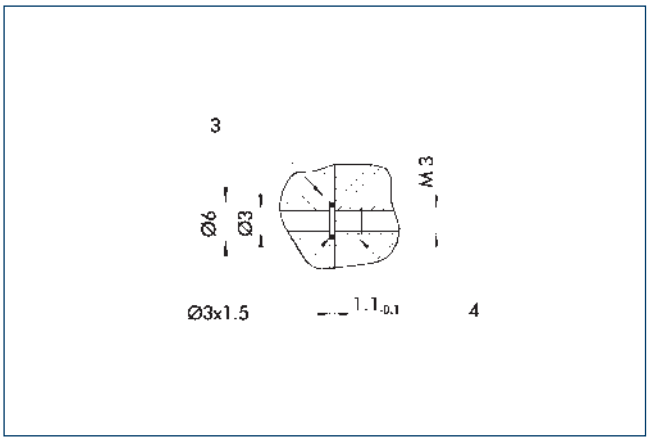

(3) Adapter (4) Grippers

The direct connection is used for supplying compressed air without hoses. Instead, the pressure medium is fed through bore-holes in the mounting plate.

SDV-P pressure maintenance valve

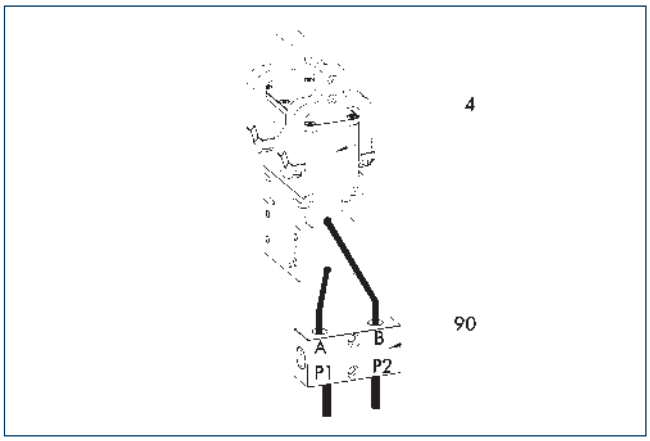

(4) Grippers (90) SDV-P pressure maintenance valve

The SDV-P pressure maintenance valve ensures in emergency STOP situations that the pressure in the piston chamber of pneumatic gripper, swivel, linear, and quick-change modules is temporarily maintained.

Description	ID	Recommended hose diameter
		[mm]
Pressure maintenance valve		
SDV-P 04	0403130	6
Pressure maintenance valve with air bleed screw		
SDV-P 04-E	0300120	6

ⓘ In order to achieve the specified closing and opening time for each gripper variant, the recommended hose diameter must be used. The direct allocation of the respective variant of the gripper for the respective SDV-P can be found at schunk.com.

Attachment kit for proximity switch

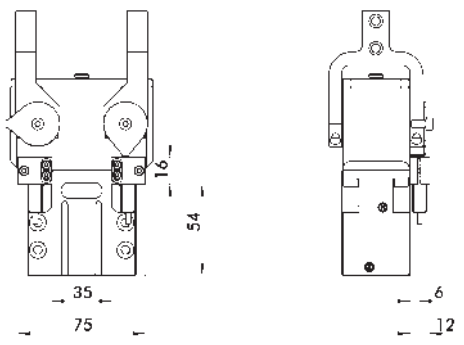

The attachment kit consists of brackets and the appropriate fastening materials. The proximity switches must be ordered separately.

Description	ID	
Attachment kit for proximity switch		
AS-DRG-44-80	0304131	

ⓘ This attachment kit needs to be ordered optionally as an accessory.

Inductive proximity switches

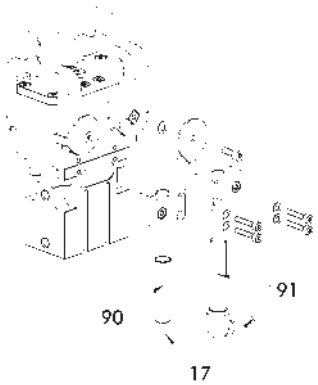

(17) Cable outlet
(90) Sensor IN ...
(91) Sensor IN..-SA

End position monitoring can be mounted with an attachment kit.

Description	ID	Often combined
Attachment kit for proximity switch		
AS-DRG-44-80	0304131	
Inductive proximity switch		
IN 80-S-M12	0301578	
IN 80-S-M8	0301478	●
INK 80-S	0301550	
Inductive proximity switch with lateral cable outlet		
IN 80-S-M12-SA	0301587	
IN 80-S-M8-SA	0301483	●
INK 80-S-SA	0301566	

ⓘ Two sensors (closer/S) are required for each unit and extension cables are available as an option. This attachment kit needs to be ordered optionally as an accessory. For sensor cables, note the minimum permissible bending radii. These are generally 35 mm.

Inductive proximity switches

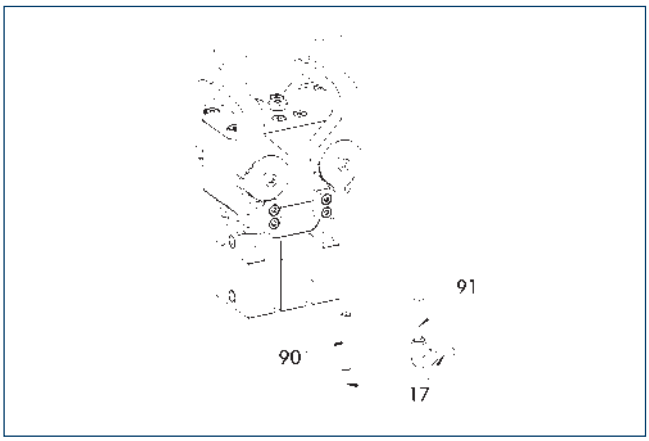

(17) Cable outlet
(91) Sensor IN..-SA
(90) Sensor IN ...

Directly mounted end position monitoring.

Description	ID	Often combined
Inductive proximity switch		
IN 40-S-M12	0301574	
IN 40-S-M8	0301474	●
INK 40-S	0301555	
Inductive proximity switch with lateral cable outlet		
IN 40-S-M12-SA	0301577	
IN 40-S-M8-SA	0301473	●
INK 40-S-SA	0301565	
Connection cables		
KA BG08-L 3P-0300-PNP	0301622	●
KA BG08-L 3P-0500-PNP	0301623	
KA BG12-L 3P-0500-PNP	30016369	
KA BW08-L 3P-0300-PNP	0301594	
KA BW08-L 3P-0500-PNP	0301502	
KA BW12-L 3P-0300-PNP	0301503	
KA BW12-L 3P-0500-PNP	0301507	
Clip for connector/socket		
CLI-M12	0301464	
CLI-M8	0301463	
Cable extension		
KV BG12-SG12 3P-0030-PNP	0301999	
KV BG12-SG12 3P-0060-PNP	0301998	
KV BW08-SG08 3P-0030-PNP	0301495	
KV BW08-SG08 3P-0100-PNP	0301496	
KV BW08-SG08 3P-0200-PNP	0301497	●
KV BW12-SG12 3P-0030-PNP	0301595	
KV BW12-SG12 3P-0100-PNP	0301596	
KV BW12-SG12 3P-0200-PNP	0301597	
Sensor distributor		
V2-M12	0301776	●
V2-M8	0301775	●
V4-M8	0301746	
V8-M8	0301751	

ⓘ Two sensors are required per unit for monitoring two positions. On option, extension cables and sensor distributors are available. Additional product variants of the sensor, and further information and technical data can be found in the catalog chapter sensor system.

Electronic magnetic switch MMS

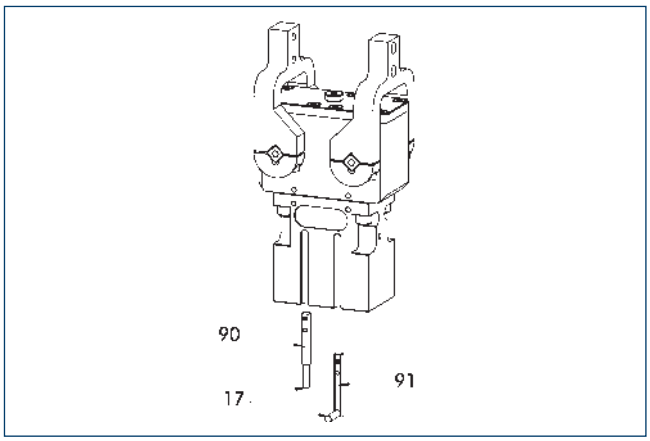

(17) Cable outlet
(91) Sensor MMS 22...-SA
(90) Sensor MMS 22..

End position monitoring for mounting in the C-slot.

Description	ID	Often combined
Electronic magnetic switch		
MMS 22-S-M8-PNP	0301032	●
MMSK 22-S-PNP	0301034	
Electronic magnetic switches with lateral cable outlet		
MMS 22-S-M8-PNP-SA	0301042	●
MMSK 22-S-PNP-SA	0301044	
Connection cables		
KA BG08-L 3P-0300-PNP	0301622	●
KA BG08-L 3P-0500-PNP	0301623	
KA BW08-L 3P-0300-PNP	0301594	
KA BW08-L 3P-0500-PNP	0301502	
Clip for connector/socket		
CLI-M8	0301463	
Cable extension		
KV BW08-SG08 3P-0030-PNP	0301495	
KV BW08-SG08 3P-0100-PNP	0301496	
KV BW08-SG08 3P-0200-PNP	0301497	●
Sensor distributor		
V2-M8	0301775	●
V4-M8	0301746	
V8-M8	0301751	

ⓘ Two sensors are required per unit for monitoring two positions. On option, extension cables and sensor distributors are available. Additional product variants of the sensor, and further information and technical data can be found in the catalog chapter sensor system.

DRG 80

Radial gripper

Gripping force O.D. gripping

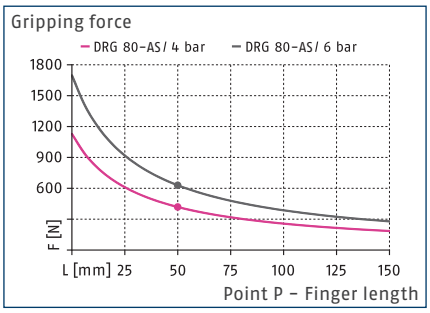

Closing moment curve

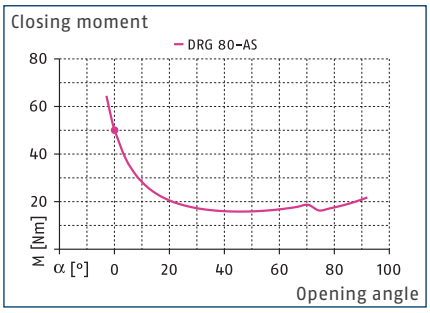

Dimensions and maximum loads

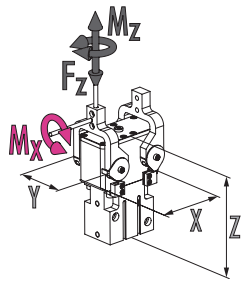

Mx max. 17.5 Nm
Fz max. 400 N
Mz max. 1.6 Nm

ⓘ The indicated torques and forces are static values, apply for each base jaw, and may occur simultaneously.

Technical data

Description		DRG 80-90-AS
ID		0307109
Opening angle per jaw	[°]	90
Closed angle per jaw	[°]	1.5
Closing moment	[Nm]	50
Closing moment generated by spring	[Nm]	8.1
Weight	[kg]	2
Recommended workpiece weight	[kg]	3.2
Cylinder volume per double stroke	[cm³]	110
Min./nom./max. operating pressure	[bar]	4/6/6.5
Closing/opening time	[s]	0.5/0.6
Closing time with spring only	[s]	0.70
Max. permissible finger length	[mm]	100
Max. permissible weight per finger	[kg]	0.5
IP protection class		67
Min./max. ambient temperature	[°C]	5/90
Repeat accuracy	[mm]	0.1
Dimensions X x Y x Z	[mm]	100 x 71.6 x 135.5
Options and their characteristics		
High-temperature version		39307109
Min./max. ambient temperature	[°C]	5/130

ⓘ The opening angle of the base jaws can be limited.

Main view

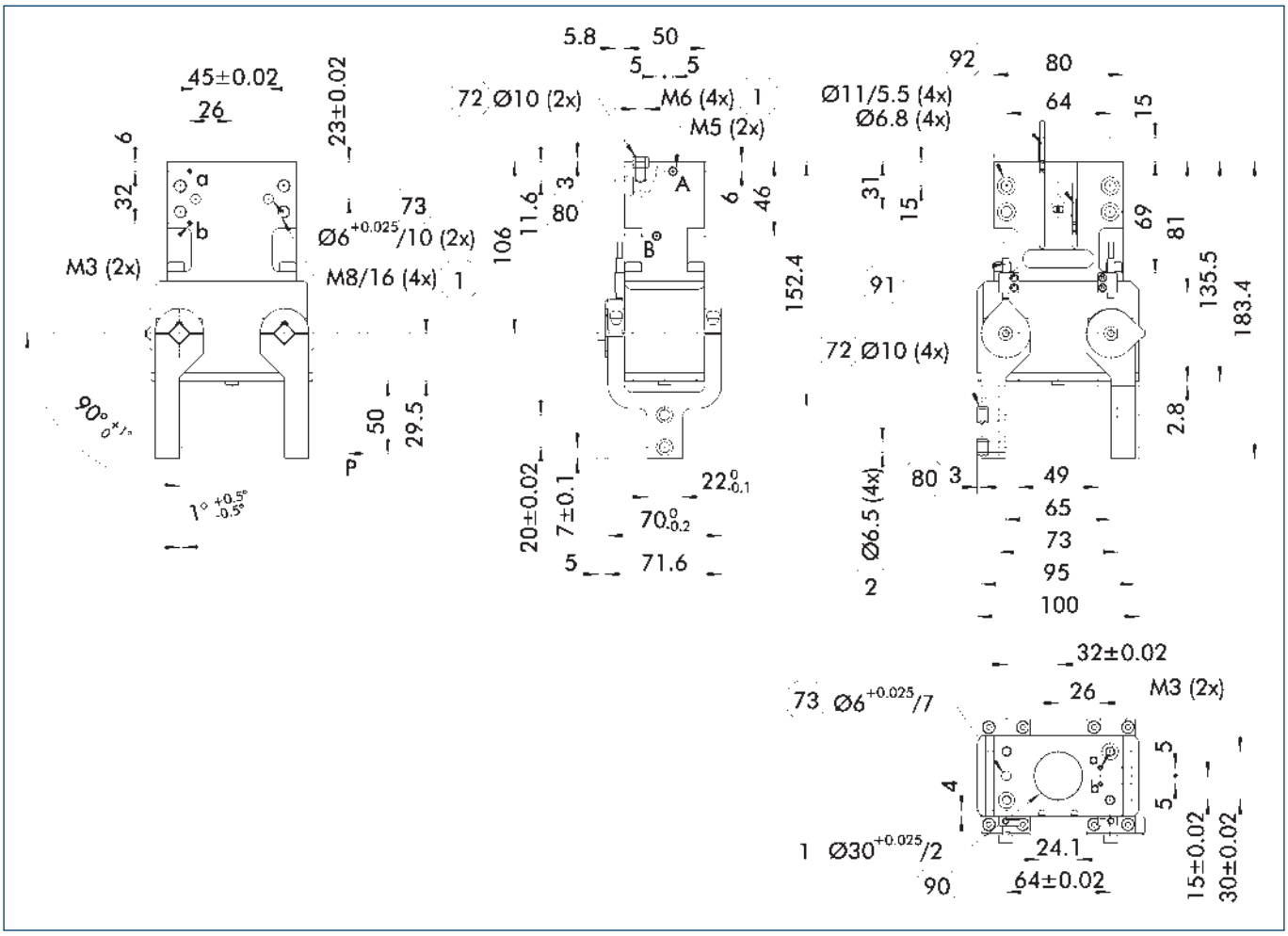

The drawing shows the gripper in the basic version with closed jaws, without dimensional consideration of the options described below.

ⓘ The SDV-P pressure maintenance valve can be used as a gripping force maintenance device (see catalog section on accessories).

A, a Main / direct connection, gripper opening

B, b Main / direct connection, gripper closing

(1) Gripper connection

(2) Finger connection

(72) Fit for centering sleeves

(73) Fit for centering pins

(80) Depth of the centering sleeve hole in the counter part

(90) Depth of centering collar

(91) Sensor IN ...

(92) Sensor MMS 22..

Maximum permitted finger projection

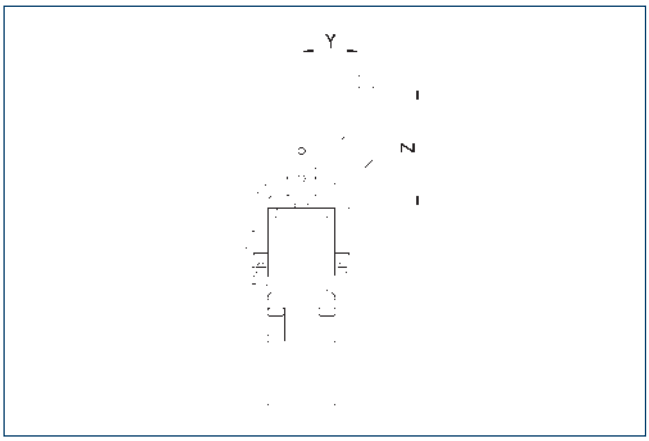

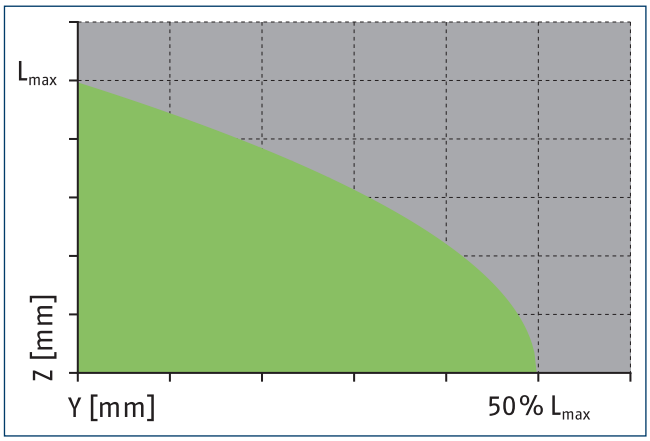

Permitted range Inadmissible range

Lmax is equivalent to the maximum permitted finger length, see the technical data table.

Hose-free direct connection M3

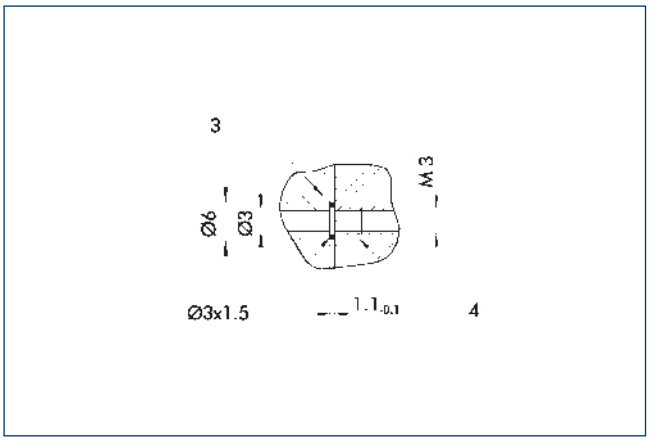

(3) Adapter (4) Grippers

The direct connection is used for supplying compressed air without hoses. Instead, the pressure medium is fed through bore-holes in the mounting plate.

SDV-P pressure maintenance valve

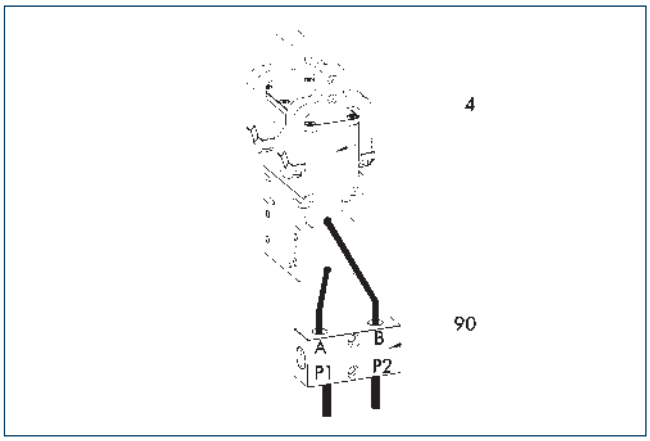

(4) Grippers (90) SDV-P pressure maintenance valve

The SDV-P pressure maintenance valve ensures in emergency STOP situations that the pressure in the piston chamber of pneumatic gripper, swivel, linear, and quick-change modules is temporarily maintained.

Description	ID	Recommended hose diameter
		[mm]
Pressure maintenance valve		
SDV-P 04	0403130	6
Pressure maintenance valve with air bleed screw		
SDV-P 04-E	0300120	6

ⓘ In order to achieve the specified closing and opening time for each gripper variant, the recommended hose diameter must be used. The direct allocation of the respective variant of the gripper for the respective SDV-P can be found at schunk.com.

Attachment kit for proximity switch

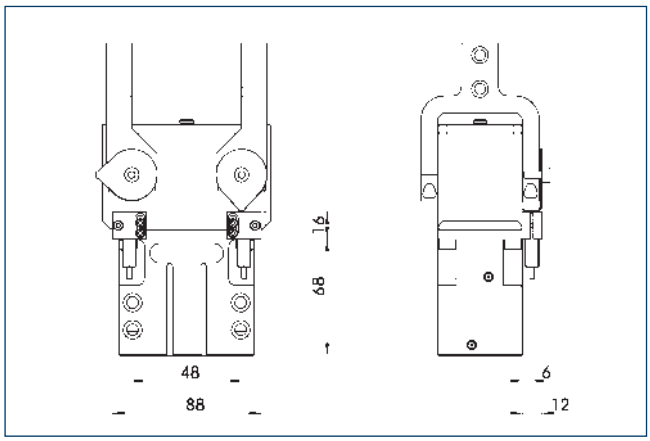

The attachment kit consists of brackets and the appropriate fastening materials. The proximity switches must be ordered separately.

Description	ID	
Attachment kit for proximity switch		
AS-DRG-44-80	0304131	

ⓘ This attachment kit needs to be ordered optionally as an accessory.

Inductive proximity switches

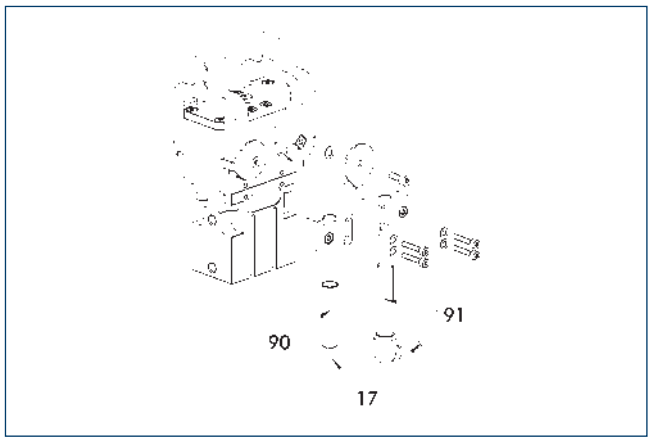

(17) Cable outlet
(90) Sensor IN ...
(91) Sensor IN..-SA

End position monitoring can be mounted with an attachment kit.

Description	ID	Often combined
Attachment kit for proximity switch		
AS-DRG-44-80	0304131	
Inductive proximity switch		
IN 80-S-M12	0301578	
IN 80-S-M8	0301478	●
INK 80-S	0301550	
Inductive proximity switch with lateral cable outlet		
IN 80-S-M12-SA	0301587	
IN 80-S-M8-SA	0301483	●
INK 80-S-SA	0301566	

ⓘ Two sensors (closer/S) are required for each unit and extension cables are available as an option. This attachment kit needs to be ordered optionally as an accessory. For sensor cables, note the minimum permissible bending radii. These are generally 35 mm.

Inductive proximity switches

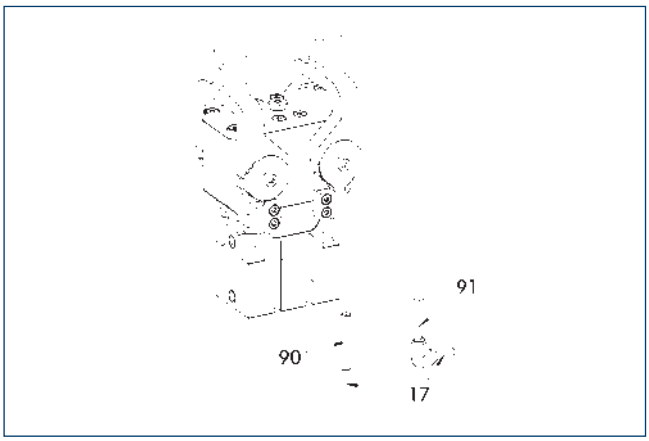

(17) Cable outlet
(91) Sensor IN..-SA
(90) Sensor IN ...

Directly mounted end position monitoring.

Description	ID	Often combined
Inductive proximity switch		
IN 40-S-M12	0301574	
IN 40-S-M8	0301474	●
INK 40-S	0301555	
Inductive proximity switch with lateral cable outlet		
IN 40-S-M12-SA	0301577	
IN 40-S-M8-SA	0301473	●
INK 40-S-SA	0301565	
Connection cables		
KA BG08-L 3P-0300-PNP	0301622	●
KA BG08-L 3P-0500-PNP	0301623	
KA BG12-L 3P-0500-PNP	30016369	
KA BW08-L 3P-0300-PNP	0301594	
KA BW08-L 3P-0500-PNP	0301502	
KA BW12-L 3P-0300-PNP	0301503	
KA BW12-L 3P-0500-PNP	0301507	
Clip for connector/socket		
CLI-M12	0301464	
CLI-M8	0301463	
Cable extension		
KV BG12-SG12 3P-0030-PNP	0301999	
KV BG12-SG12 3P-0060-PNP	0301998	
KV BW08-SG08 3P-0030-PNP	0301495	
KV BW08-SG08 3P-0100-PNP	0301496	
KV BW08-SG08 3P-0200-PNP	0301497	●
KV BW12-SG12 3P-0030-PNP	0301595	
KV BW12-SG12 3P-0100-PNP	0301596	
KV BW12-SG12 3P-0200-PNP	0301597	
Sensor distributor		
V2-M12	0301776	●
V2-M8	0301775	●
V4-M8	0301746	
V8-M8	0301751	

ⓘ Two sensors are required per unit for monitoring two positions. On option, extension cables and sensor distributors are available. Additional product variants of the sensor, and further information and technical data can be found in the catalog chapter sensor system.

Electronic magnetic switch MMS

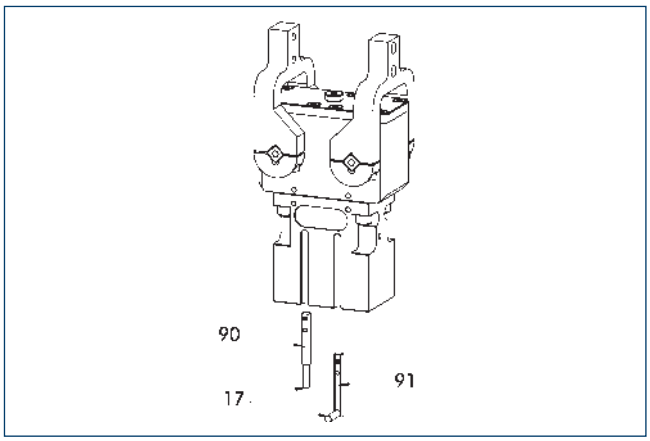

(17) Cable outlet
(91) Sensor MMS 22...-SA
(90) Sensor MMS 22..

End position monitoring for mounting in the C-slot.

Description	ID	Often combined
Electronic magnetic switch		
MMS 22-S-M8-PNP	0301032	●
MMSK 22-S-PNP	0301034	
Electronic magnetic switches with lateral cable outlet		
MMS 22-S-M8-PNP-SA	0301042	●
MMSK 22-S-PNP-SA	0301044	
Connection cables		
KA BG08-L 3P-0300-PNP	0301622	●
KA BG08-L 3P-0500-PNP	0301623	
KA BW08-L 3P-0300-PNP	0301594	
KA BW08-L 3P-0500-PNP	0301502	
Clip for connector/socket		
CLI-M8	0301463	
Cable extension		
KV BW08-SG08 3P-0030-PNP	0301495	
KV BW08-SG08 3P-0100-PNP	0301496	
KV BW08-SG08 3P-0200-PNP	0301497	●
Sensor distributor		
V2-M8	0301775	●
V4-M8	0301746	
V8-M8	0301751	

ⓘ Two sensors are required per unit for monitoring two positions. On option, extension cables and sensor distributors are available. Additional product variants of the sensor, and further information and technical data can be found in the catalog chapter sensor system.

DRG 100

Radial gripper

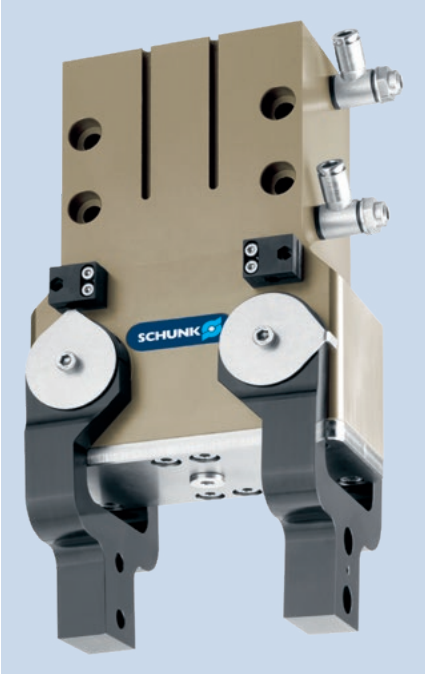

Gripping force O.D. gripping

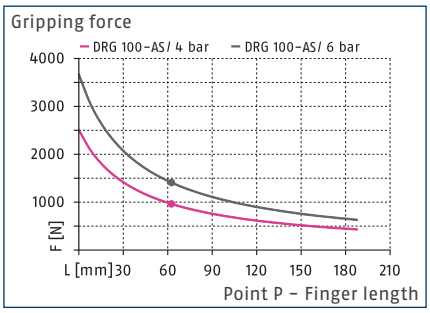

Closing moment curve

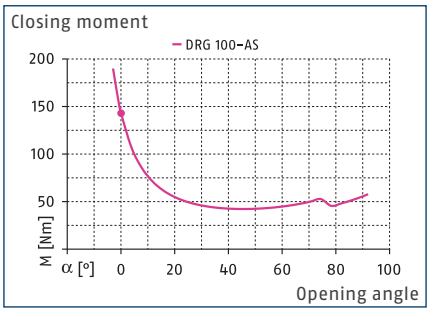

Dimensions and maximum loads

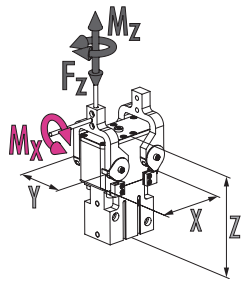

Mx max. 35 Nm

Fz max. 1200 N

Mz max. 10 Nm

ⓘ The indicated torques and forces are static values, apply for each base jaw, and may occur simultaneously.

Technical data

Description		DRG 100-90-AS
ID		0307110
Opening angle per jaw	[°]	90
Closed angle per jaw	[°]	1.5
Closing moment	[Nm]	144.4
Closing moment generated by spring	[Nm]	30
Weight	[kg]	4.46
Recommended workpiece weight	[kg]	7.2
Cylinder volume per double stroke	[cm³]	217
Min./nom./max. operating pressure	[bar]	4/6/6.5
Closing/opening time	[s]	0.3/0.6
Closing time with spring only	[s]	0.75
Max. permissible finger length	[mm]	125
Max. permissible weight per finger	[kg]	1
IP protection class		67
Min./max. ambient temperature	[°C]	5/90
Repeat accuracy	[mm]	0.1
Dimensions X x Y x Z	[mm]	130 x 90 x 179
Options and their characteristics		
High-temperature version		39307110
Min./max. ambient temperature	[°C]	5/130

ⓘ The opening angle of the base jaws can be limited.

Main view

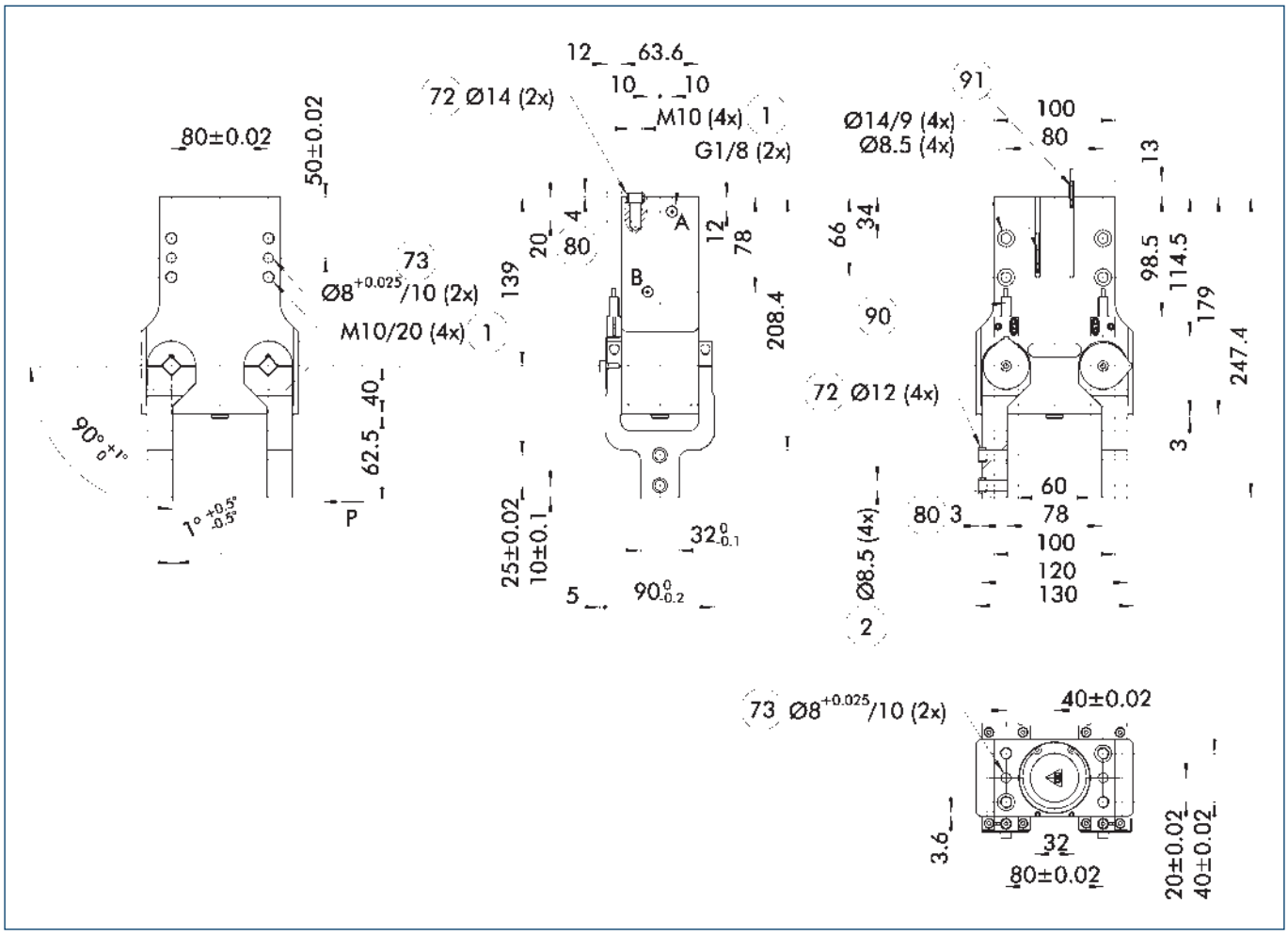

The drawing shows the gripper in the basic version with closed jaws, without dimensional consideration of the options described below.

ⓘ The SDV-P pressure maintenance valve can be used as a gripping force maintenance device (see catalog section on accessories).

A, a Main / direct connection, gripper opening

B, b Main / direct connection, gripper closing

(1) Gripper connection

(2) Finger connection

(72) Fit for centering sleeves

(73) Fit for centering pins

(80) Depth of the centering sleeve hole in the counter part

(90) Sensor IN ...

(91) Sensor MMS 22..

Maximum permitted finger projection

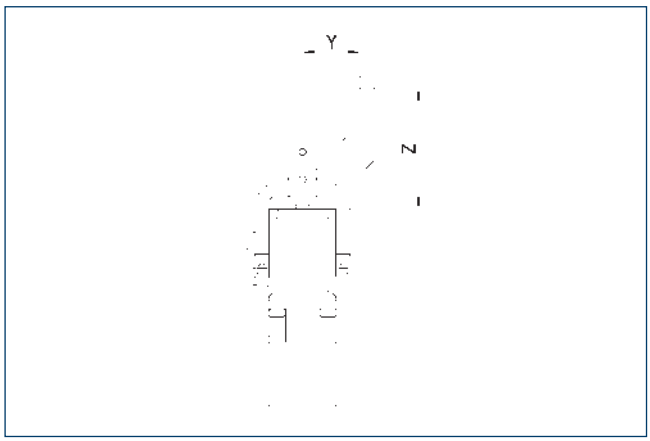

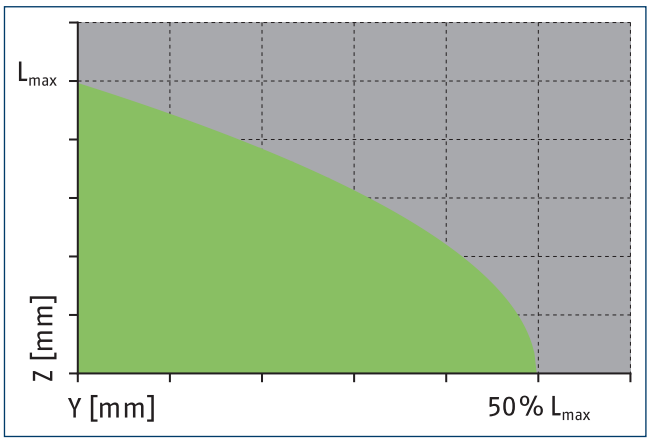

Permitted range

Inadmissible range

Lmax is equivalent to the maximum permitted finger length, see the technical data table.

SDV-P pressure maintenance valve

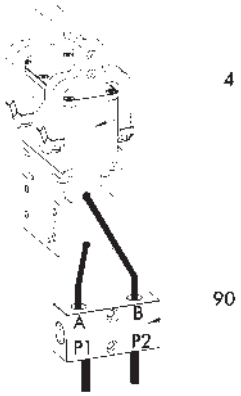

(4) Grippers

(90) SDV-P pressure maintenance valve

The SDV-P pressure maintenance valve ensures in emergency STOP situations that the pressure in the piston chamber of pneumatic gripper, swivel, linear, and quick-change modules is temporarily maintained.

Description	ID	Recommended hose diameter
		[mm]
Pressure maintenance valve		
SDV-P 04	0403130	6
Pressure maintenance valve with air bleed screw		
SDV-P 04-E	0300120	6

ⓘ In order to achieve the specified closing and opening time for each gripper variant, the recommended hose diameter must be used. The direct allocation of the respective variant of the gripper for the respective SDV-P can be found at schunk.com.

Inductive proximity switches

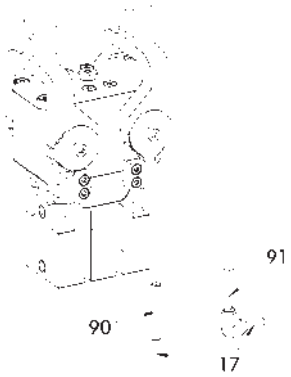

(17) Cable outlet

(91) Sensor IN..-SA

(90) Sensor IN ...

Directly mounted end position monitoring.

Description	ID	Often combined
Inductive proximity switch		
IN 80-S-M12	0301578	
IN 80-S-M8	0301478	●
INK 80-S	0301550	
Inductive proximity switch with lateral cable outlet		
IN 80-S-M12-SA	0301587	
IN 80-S-M8-SA	0301483	●
INK 80-S-SA	0301566	
Connection cables		
KA BG08-L 3P-0300-PNP	0301622	●
KA BG08-L 3P-0500-PNP	0301623	
KA BG12-L 3P-0500-PNP	30016369	
KA BW08-L 3P-0300-PNP	0301594	
KA BW08-L 3P-0500-PNP	0301502	
KA BW12-L 3P-0300-PNP	0301503	
KA BW12-L 3P-0500-PNP	0301507	
Clip for connector/socket		
CLI-M12	0301464	
CLI-M8	0301463	
Cable extension		
KV BG12-SG12 3P-0030-PNP	0301999	
KV BG12-SG12 3P-0060-PNP	0301998	
KV BW08-SG08 3P-0030-PNP	0301495	
KV BW08-SG08 3P-0100-PNP	0301496	
KV BW08-SG08 3P-0200-PNP	0301497	●
KV BW12-SG12 3P-0030-PNP	0301595	
KV BW12-SG12 3P-0100-PNP	0301596	
KV BW12-SG12 3P-0200-PNP	0301597	
Sensor distributor		
V2-M12	0301776	●
V2-M8	0301775	●
V4-M8	0301746	
V8-M8	0301751	

ⓘ Two sensors are required per unit for monitoring two positions. On option, extension cables and sensor distributors are available. Additional product variants of the sensor, and further information and technical data can be found in the catalog chapter sensor system.

Electronic magnetic switch MMS

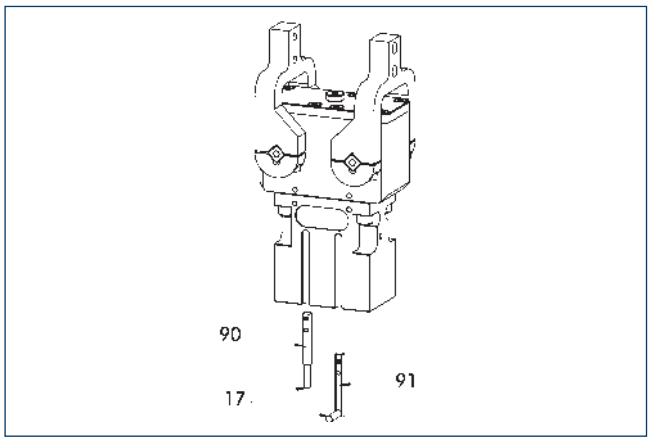

(17) Cable outlet
(91) Sensor MMS 22...-SA
(90) Sensor MMS 22..

End position monitoring for mounting in the C-slot.

Description	ID	Often combined
Electronic magnetic switch		
MMS 22-S-M8-PNP	0301032	●
MMSK 22-S-PNP	0301034	
Electronic magnetic switches with lateral cable outlet		
MMS 22-S-M8-PNP-SA	0301042	●
MMSK 22-S-PNP-SA	0301044	
Connection cables		
KA BG08-L 3P-0300-PNP	0301622	●
KA BG08-L 3P-0500-PNP	0301623	
KA BW08-L 3P-0300-PNP	0301594	
KA BW08-L 3P-0500-PNP	0301502	
Clip for connector/socket		
CLI-M8	0301463	
Cable extension		
KV BW08-SG08 3P-0030-PNP	0301495	
KV BW08-SG08 3P-0100-PNP	0301496	
KV BW08-SG08 3P-0200-PNP	0301497	●
Sensor distributor		
V2-M8	0301775	●
V4-M8	0301746	
V8-M8	0301751	

ⓘ Two sensors are required per unit for monitoring two positions. On option, extension cables and sensor distributors are available. Additional product variants of the sensor, and further information and technical data can be found in the catalog chapter sensor system.

SCHUNK GmbH & Co. KG
Spann- und Greiftechnik

Bahnhofstr. 106 - 134
D-74348 Lauffen/Neckar
Tel. +49-7133-103-0
Fax +49-7133-103-2399
info@de.schunk.com
schunk.com

Folgen Sie uns | *Follow us*

2024-10-16 © 2024 SCHUNK GmbH & Co. KG