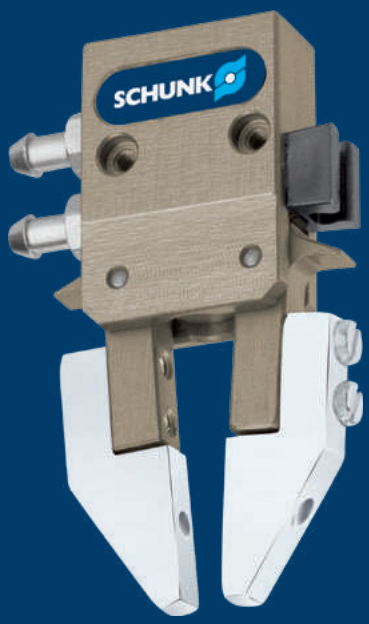

Superior Clamping and Gripping

Product data sheet

Angular gripper SWG

Slim. Reliable. Fast.

Gripper for small components SWG

Narrow double-acting 2-finger angular gripper

Field of application

For universal use in clean and slightly dirty environments. Suitable for applications which require a space-optimized gripper Arrangement.

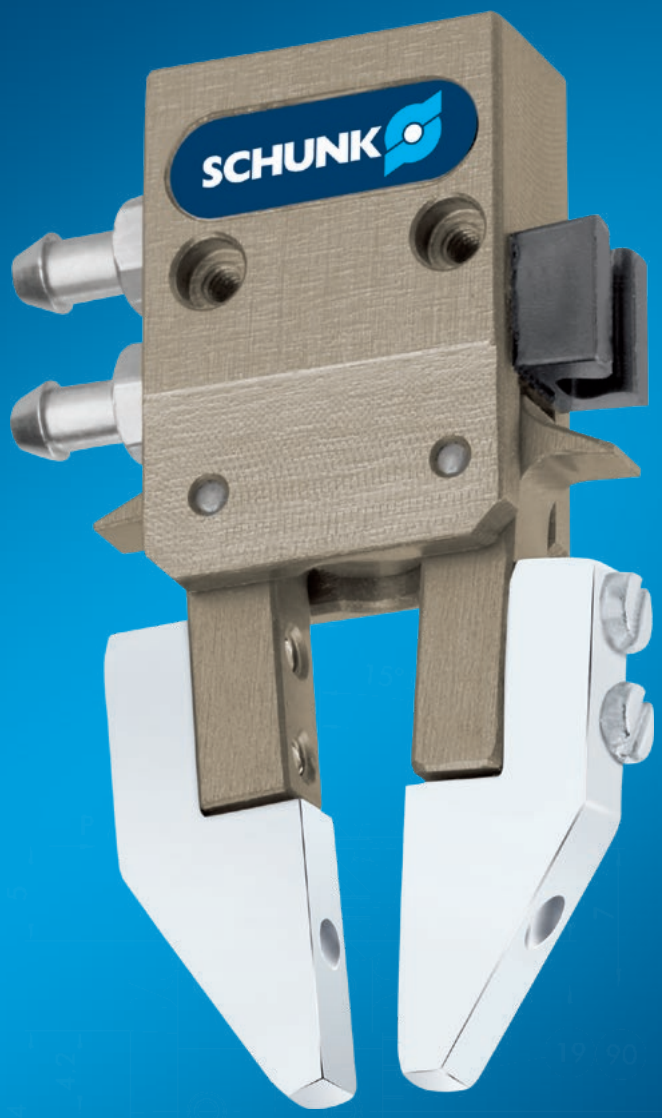

Advantages – Your benefits

Slim design allowing the grippers to be arranged in a row

Spring-supported gripping force maintenance holds the workpiece even in case of a loss of pressure

Wedge-hook design for high power transmission and synchronized gripping

Light and compact design for space-saving handling without interfering contours

Monitoring via electronic magnetic switches a space-saving feature in a slot in the housing

Sizes	Weight	Gripping moment	Angle per jaw	Workpiece weight
Quantity: 8	0.0025 .. 0.213 kg	0.01 .. 2.8 Nm	15°	0.007 .. 0.46 kg

Functional description

The piston is moved up and down by compressed air. The kinematics transforms this vertical motion into a synchronous and rotatory gripping motion of the base jaws.

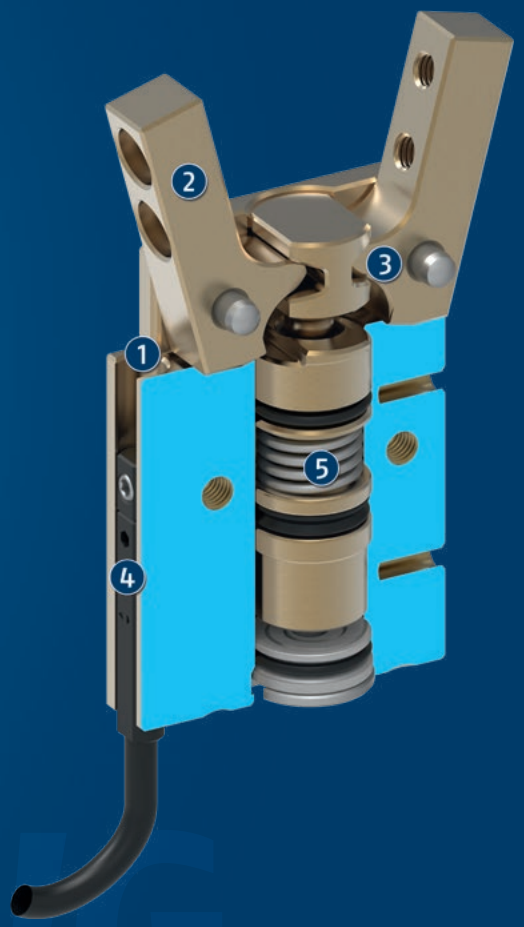

① **Housing**
is weight-optimized due to the use of high-strength aluminum alloy

② **Base fingers**
for the connection of workpiece-specific gripper fingers

③ **Kinematics**
precise gear for centric gripping

④ **Sensor system**
electronic magnetic switch, space-saving integration in the groove of the housing

⑤ **Gripping force maintenance**
mechanic gripping force maintenance for O.D. gripping

General notes about the series

Operating principle: double-acting, guided kinematics

Housing material: Aluminum alloy, anodized

Base jaw material: Aluminum alloy, anodized

Actuation: pneumatic, with filtered compressed air as per ISO 8573-1:2010 [7:4:4].

Warranty: 24 months

Service life characteristics: on request

Scope of delivery: Gripper in the ordered variant, accessory kit (centering sleeves/detailed contents see operating manual) and safety information. Product-specific instructions can be downloaded at schunk.com/downloads-manuals.

Gripping force maintenance: always integrated by using springs, and also possible via pressure maintenance valve SDV-P

Closing moment: is the arithmetic sum of the individual moment applied to each jaw.

Finger length: is measured from the reference surface as the distance P in direction to the main axis.

Repeat accuracy: is defined as a distribution of the end Position for 100 consecutive strokes.

Workpiece weight: is calculated for force-fit gripping with a coefficient of static friction of 0.1 and a safety factor of 2 against workpiece slippage at acceleration due to gravity g. For form-fit or capture gripping, there are significantly higher permissible workpiece weights.

Closing and opening times: are movement times of the base jaws only, without application-specific gripper fingers. Valve switching times, hose fill times, or PLC reaction times are not included, and are to be considered when cycle times are calculated.

Application example

Triple transfer unit for packaging with small boxboards

1. 2-finger angular gripper SWG
2. Collision sensor OPR

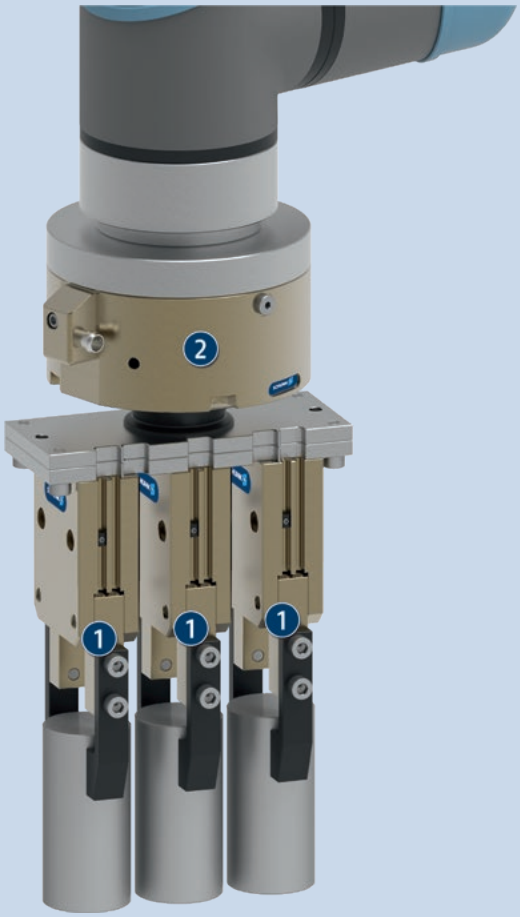

SCHUNK offers more ...

The following components make the product even more productive – the suitable addition for the highest functionality, flexibility, reliability, and controlled production.

Miniature swivel unit

Linear module

Pick & Place Unit

Compensation unit

Programmable magnetic switch

Pressure maintenance valve

ⓘ For more information on these products can be found on the following product pages or at schunk.com.

Options and special information

The angular gripper SWG can be directly mounted in a row to reduce interfering contours.
Food-grade lubrication: The product contains food-compliant lubricants as standard. The requirements of EN 1672-2:2020 are not fully met. The relevant NSF certificates are available at https://info.nsf.org/USDA/Listings.asp using the lubricant information in the operating manual.

SWG 10

Angular gripper

Gripping force O.D. gripping

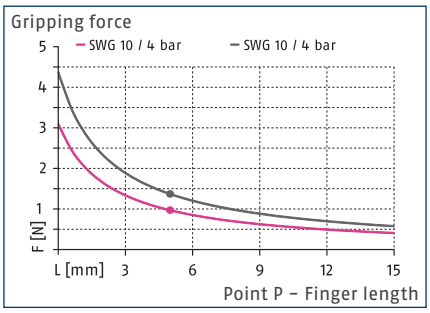

Closing moment curve

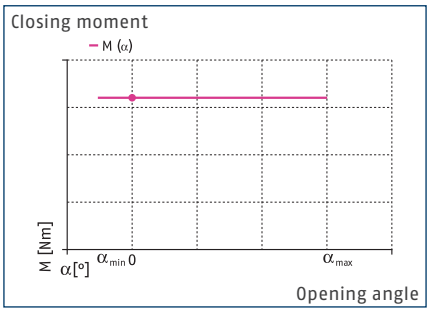

Dimensions and maximum loads

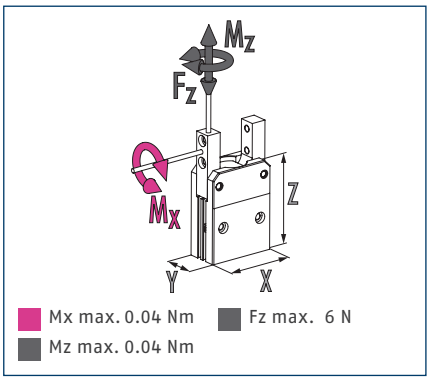

ⓘ The indicated torques and forces are static values, apply for each base jaw, and may occur simultaneously.

Technical data

Description		SWG 10
ID		0305116
Opening angle per jaw	[°]	15
Closed angle per jaw up to	[°]	7
Closing moment	[Nm]	0.01
Closing moment generated by spring	[Nm]	0.0027
Weight	[kg]	0.0025
Recommended workpiece weight	[kg]	0.007
Cylinder volume per double stroke	[cm³]	0.055
Min./nom./max. operating pressure	[bar]	4/6/6.5
Closing/opening time	[s]	0.015/0.02
Max. permissible finger length	[mm]	10
Max. permissible weight per finger	[kg]	0.003
IP protection class		30
Min./max. ambient temperature	[°C]	5/90
Repeat accuracy	[mm]	0.05
Dimensions X x Y x Z	[mm]	10.5 x 5 x 15

Main view

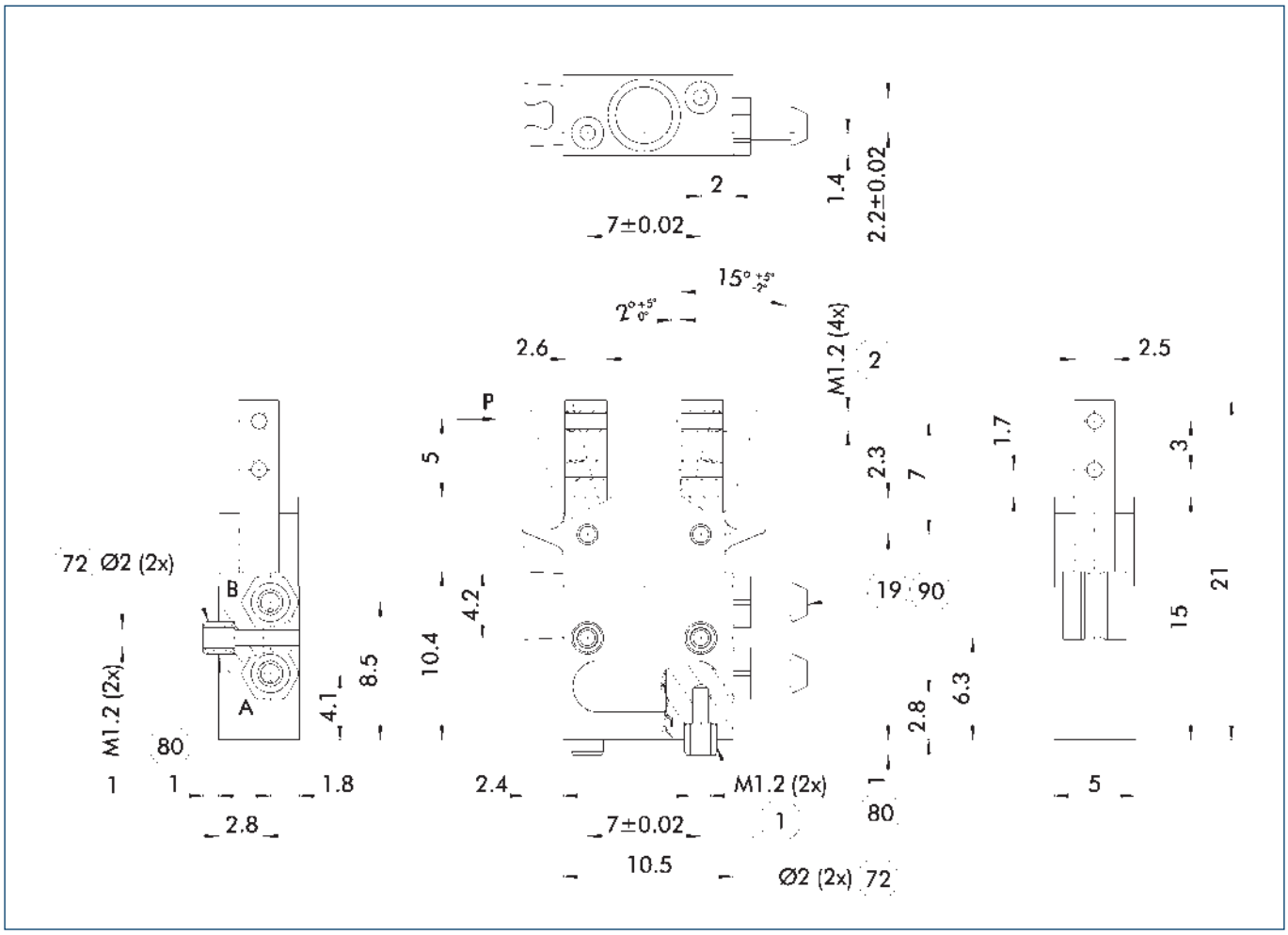

The drawing shows the gripper in the basic version with closed jaws, without dimensional consideration of the options described below.

ⓘ The SDV-P pressure maintenance valve can be used as a gripping force maintenance device (see catalog section on accessories).

A, a Main / direct connection, gripper opening

B, b Main / direct connection, gripper closing

(1) Gripper connection

(2) Finger connection

(19) Air connection

(72) Fit for centering sleeves

(80) Depth of the centering sleeve hole in the counter part

(90) EMERSON AVNETICS compressed air hose, series TU1-S (Ø 3.0–0.6), order no.: 1820712066 (-67/-68/-69)

Maximum permitted finger projection

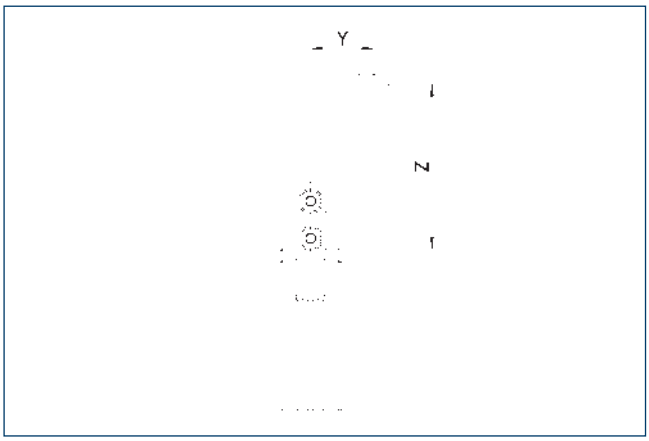

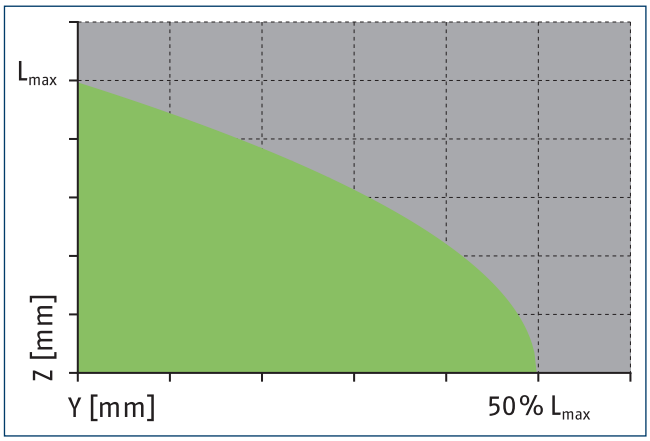

Permitted range Inadmissible range

Lmax is equivalent to the maximum permitted finger length, see the technical data table.

Optical proximity switch

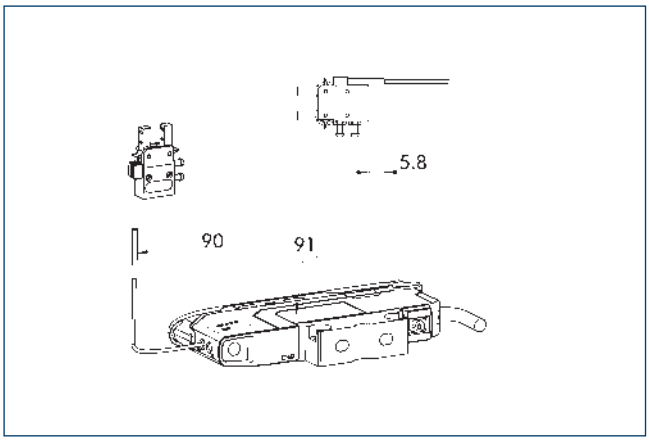

(90) Keyence fiber optic device FU-49X

(91) Keyence fiber optic amplifier FS-N41P

End position sensing via an optical proximity switch enables sensing of miniature grippers in particular. One sensor = light guide device and one amplifier are required per gripper.

SDV-P pressure maintenance valve

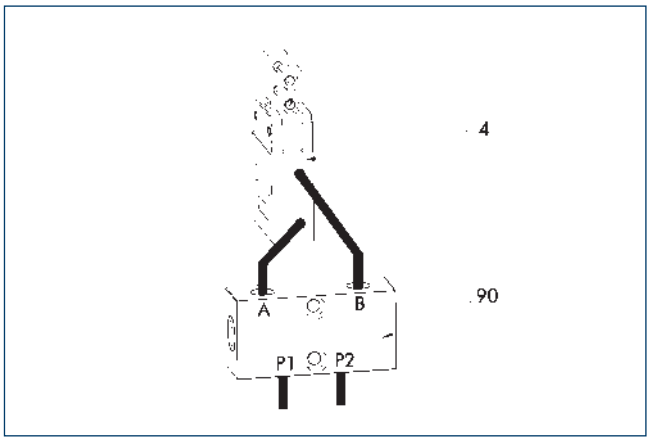

(4) Grippers

(90) SDV-P pressure maintenance valve

The SDV-P pressure maintenance valve ensures in emergency STOP situations that the pressure in the piston chamber of pneumatic gripper, swivel, linear, and quick-change modules is temporarily maintained.

Description	ID	Recommended hose diameter
		[mm]
Pressure maintenance valve		
SDV-P 04	0403130	6
Pressure maintenance valve with air bleed screw		
SDV-P 04-E	0300120	6

ⓘ In order to achieve the specified closing and opening time for each gripper variant, the recommended hose diameter must be used. The direct allocation of the respective variant of the gripper for the respective SDV-P can be found at schunk.com.

SWG 12

Angular gripper

Gripping force O.D. gripping

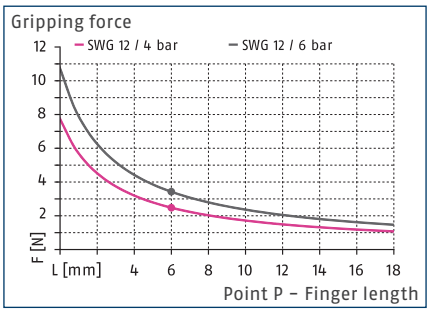

Closing moment curve

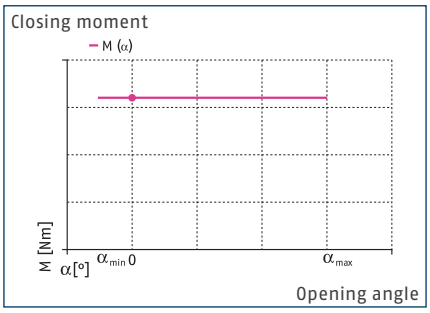

Dimensions and maximum loads

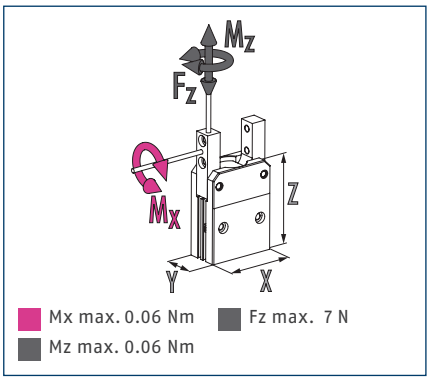

ⓘ The indicated torques and forces are static values, apply for each base jaw, and may occur simultaneously.

Technical data

Description		SWG 12
ID		0305115
Opening angle per jaw	[°]	15
Closed angle per jaw up to	[°]	7
Closing moment	[Nm]	0.03
Closing moment generated by spring	[Nm]	0.009
Weight	[kg]	0.0048
Recommended workpiece weight	[kg]	0.017
Cylinder volume per double stroke	[cm³]	0.07
Min./nom./max. operating pressure	[bar]	4/6/6.5
Closing/opening time	[s]	0.015/0.02
Max. permissible finger length	[mm]	12
Max. permissible weight per finger	[kg]	0.006
IP protection class		30
Min./max. ambient temperature	[°C]	5/90
Repeat accuracy	[mm]	0.05
Dimensions X x Y x Z	[mm]	13 x 6.5 x 18.5

Main view

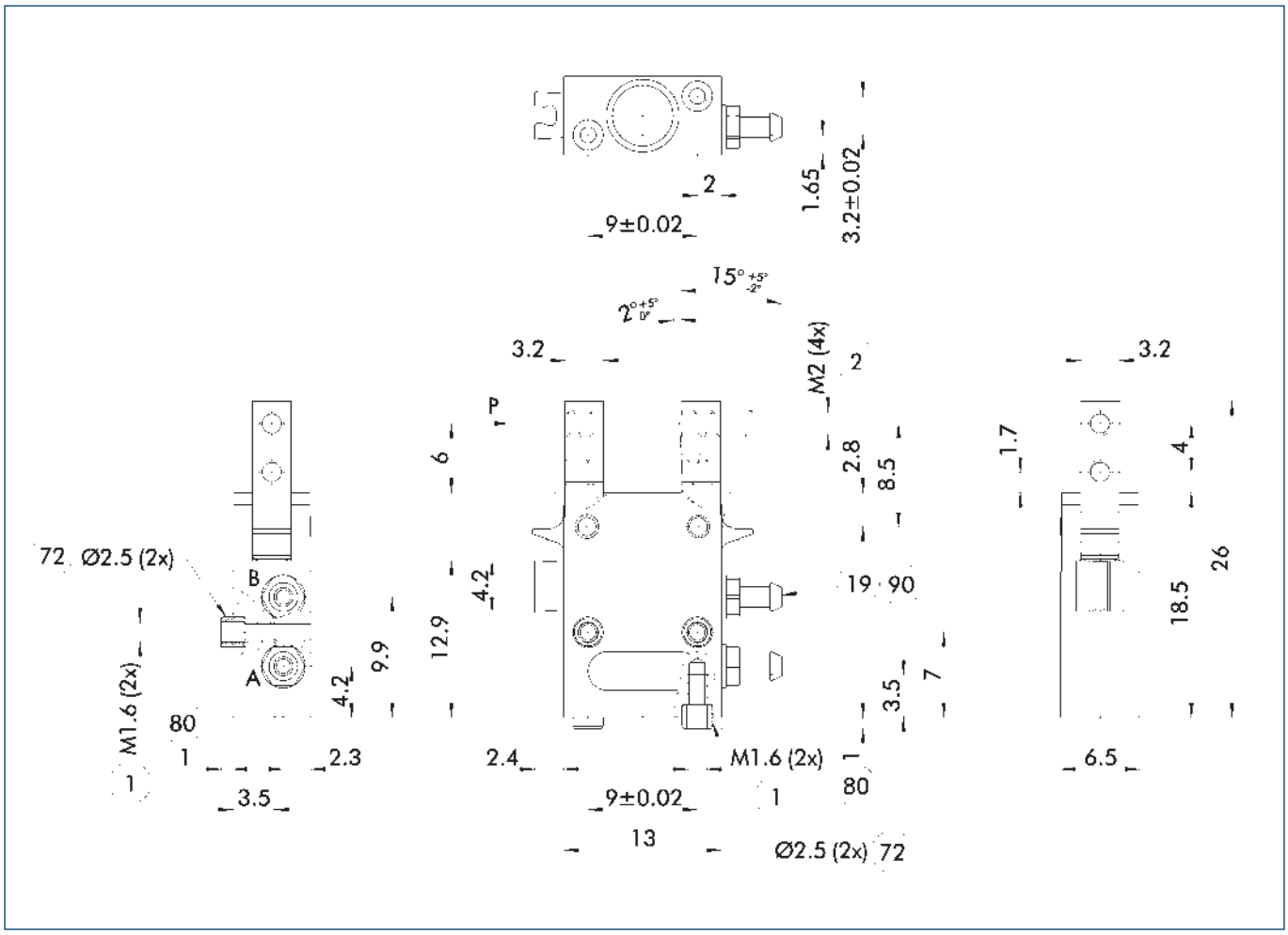

The drawing shows the gripper in the basic version with closed jaws, without dimensional consideration of the options described below.

ⓘ The SDV-P pressure maintenance valve can be used as a gripping force maintenance device (see catalog section on accessories).

A, a Main / direct connection, gripper opening

B, b Main / direct connection, gripper closing

(1) Gripper connection

(2) Finger connection

(19) Air connection

(72) Fit for centering sleeves

(80) Depth of the centering sleeve hole in the counter part

(90) EMERSON AVNETICS compressed air hose, series TU1-S (Ø 3.0–0.6), order no.: 1820712066 (-67/-68/-69)

Maximum permitted finger projection

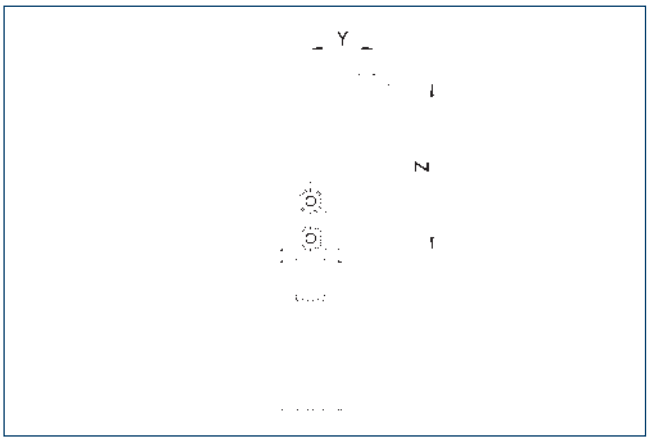

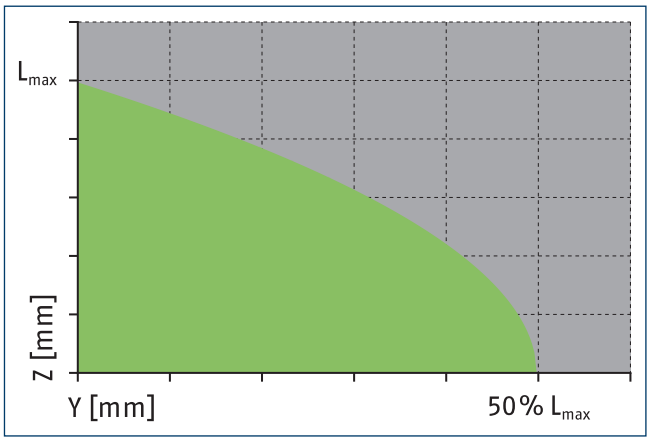

Permitted range

Inadmissible range

Lmax is equivalent to the maximum permitted finger length, see the technical data table.

Optical proximity switch

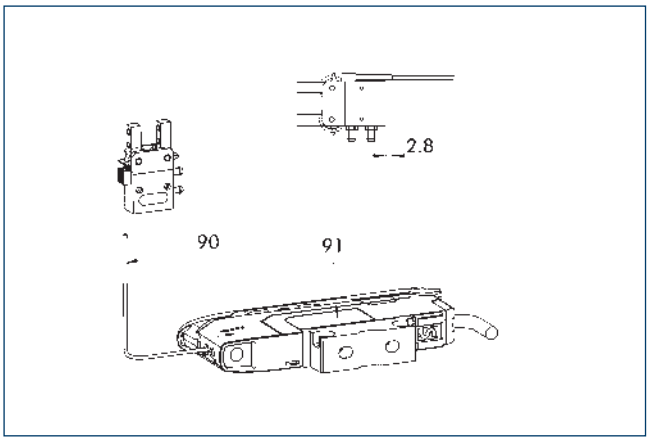

(90) Keyence fiber optic device FU-49X

(91) Keyence fiber optic amplifier FS-N41P

End position sensing via an optical proximity switch enables sensing of miniature grippers in particular. One sensor = light guide device and one amplifier are required per gripper.

SDV-P pressure maintenance valve

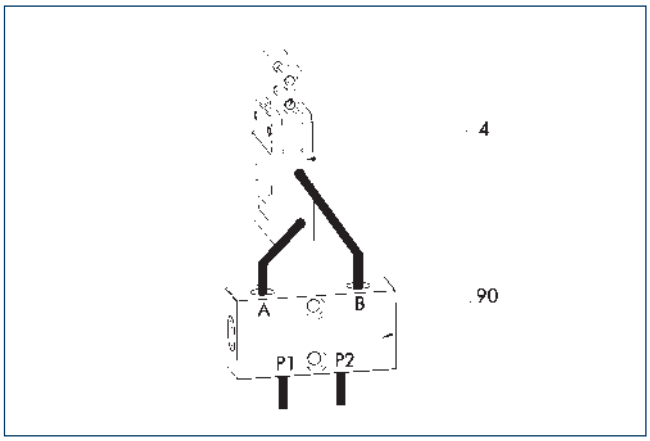

(4) Grippers

(90) SDV-P pressure maintenance valve

The SDV-P pressure maintenance valve ensures in emergency STOP situations that the pressure in the piston chamber of pneumatic gripper, swivel, linear, and quick-change modules is temporarily maintained.

Description	ID	Recommended hose diameter
		[mm]
Pressure maintenance valve		
SDV-P 04	0403130	6
Pressure maintenance valve with air bleed screw		
SDV-P 04-E	0300120	6

ⓘ In order to achieve the specified closing and opening time for each gripper variant, the recommended hose diameter must be used. The direct allocation of the respective variant of the gripper for the respective SDV-P can be found at schunk.com.

SWG 16

Angular gripper

Gripping force O.D. gripping

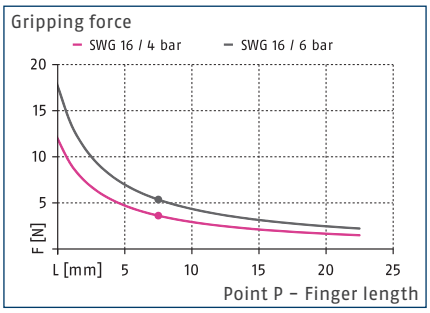

Closing moment curve

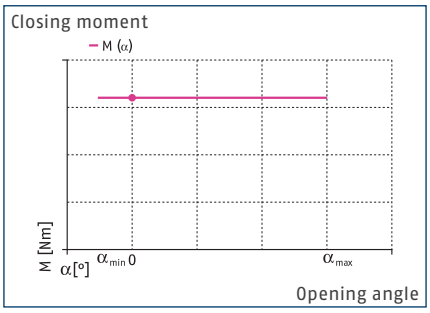

Dimensions and maximum loads

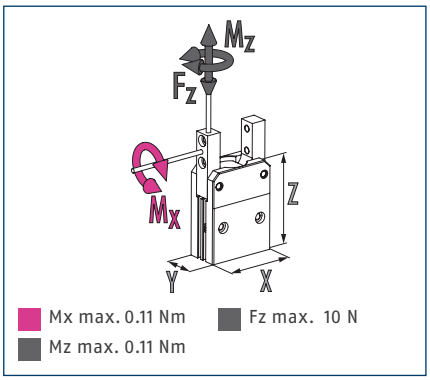

ⓘ The indicated torques and forces are static values, apply for each base jaw, and may occur simultaneously.

Technical data

Description		SWG 16
ID		0305104
Opening angle per jaw	[°]	15
Closed angle per jaw up to	[°]	7
Closing moment	[Nm]	0.058
Closing moment generated by spring	[Nm]	0.017
Weight	[kg]	0.011
Recommended workpiece weight	[kg]	0.027
Cylinder volume per double stroke	[cm³]	0.12
Min./nom./max. operating pressure	[bar]	4/6/6.5
Closing/opening time	[s]	0.015/0.02
Max. permissible finger length	[mm]	15
Max. permissible weight per finger	[kg]	0.012
IP protection class		30
Min./max. ambient temperature	[°C]	5/90
Repeat accuracy	[mm]	0.05
Dimensions X x Y x Z	[mm]	19 x 8 x 28.5

Main view

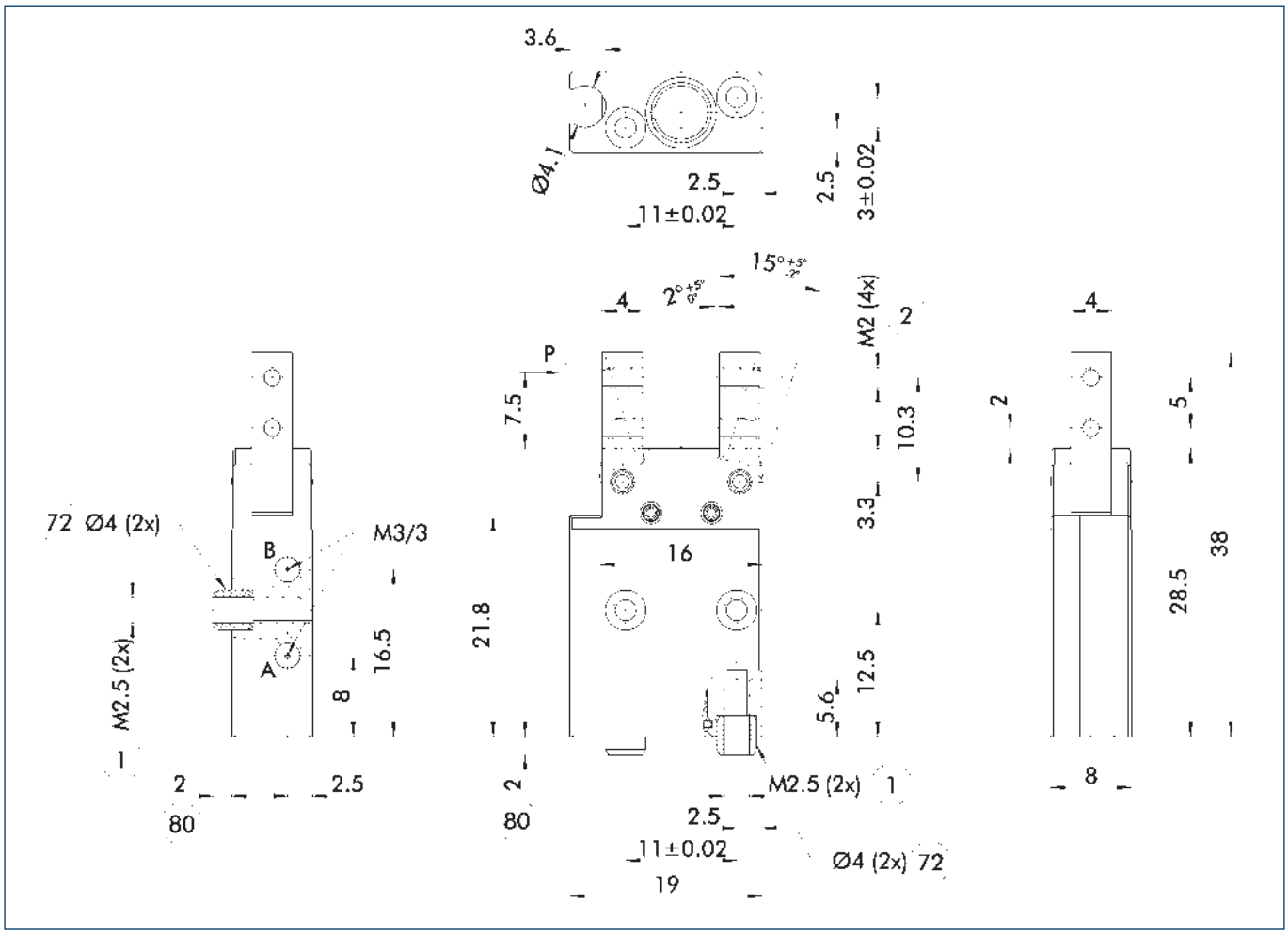

The drawing shows the gripper in the basic version with closed jaws, without dimensional consideration of the options described below.

ⓘ The SDV-P pressure maintenance valve can be used as a gripping force maintenance device (see catalog section on accessories).

A, a Main / direct connection, gripper opening

B, b Main / direct connection, gripper closing

(1) Gripper connection

(2) Finger connection

(72) Fit for centering sleeves

(80) Depth of the centering sleeve hole in the counter part

Maximum permitted finger projection

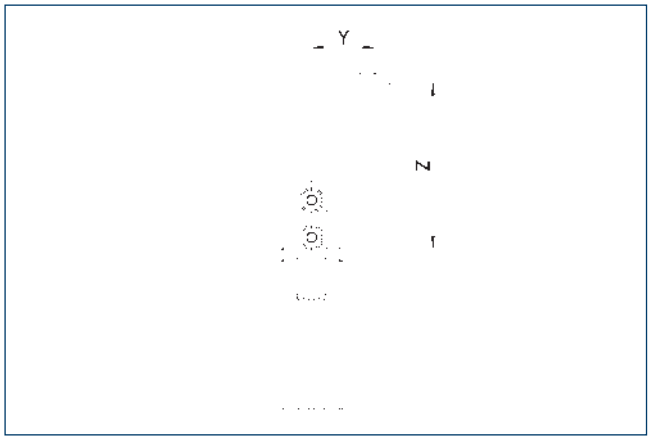

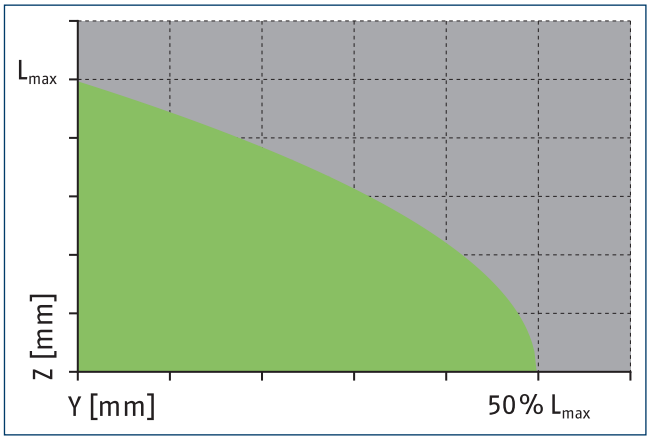

Permitted range

Inadmissible range

Lmax is equivalent to the maximum permitted finger length, see the technical data table.

SDV-P pressure maintenance valve

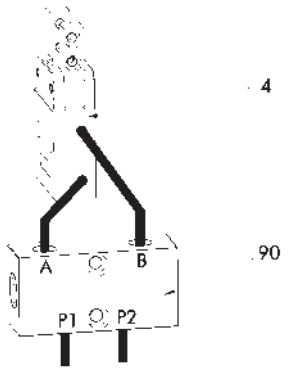

(4) Grippers

(90) SDV-P pressure maintenance valve

The SDV-P pressure maintenance valve ensures in emergency STOP situations that the pressure in the piston chamber of pneumatic gripper, swivel, linear, and quick-change modules is temporarily maintained.

Description	ID	Recommended hose diameter
		[mm]
Pressure maintenance valve		
SDV-P 04	0403130	6
Pressure maintenance valve with air bleed screw		
SDV-P 04-E	0300120	6

ⓘ In order to achieve the specified closing and opening time for each gripper variant, the recommended hose diameter must be used. The direct allocation of the respective variant of the gripper for the respective SDV-P can be found at schunk.com.

Monitoring for stacked arrangements

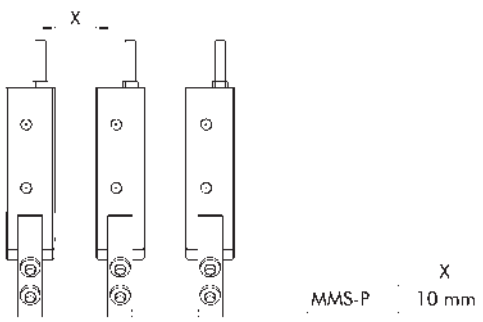

CAUTION: Monitoring is carried out by magnetic switches, and in case of side-by-side assembly of several units, a minimum distance of X mm between the units must be maintained.

Modular Assembly Automation

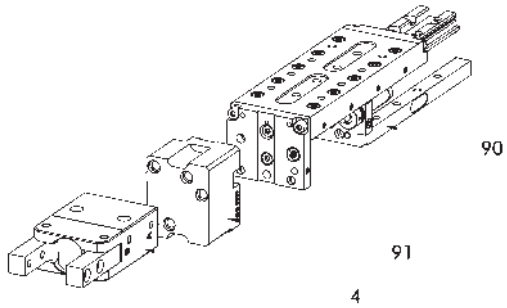

(4) Grippers

(90) Linear module CLM/KLM/LM/ELP/ELM/ELS/HLM

(91) ASG adapter plate

Grippers and linear modules can be combined with standard adapter plates from the modular assembly system. For more information see our main catalog "Modular Assembly Automation".

MMS-P programmable magnetic switch

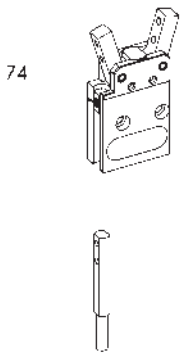

Position monitoring with two programmable positions per sensor. End position monitoring for mounting in the C-slot.

Description	ID	Often combined
Programmable magnetic switch		
MMSK-P 22-S-PNP	0301371	
MMS-P 22-S-M8-PNP	0301370	●
Connection cables		
KA GLN0804-LK-00500-A	0307767	●
KA GLN0804-LK-01000-A	0307768	
KA WLN0804-LK-00500-A	0307765	
KA WLN0804-LK-01000-A	0307766	
Clip for connector/socket		
CLI-M8	0301463	
Sensor distributor		
V2-M8-4P-2XM8-3P	0301380	

ⓘ One sensor is required per unit for monitoring two positions. Extension cables and sensor distributors are optionally available. Additional product variants of the sensor, and further information and technical data can be found in the catalog chapter sensor systems.

SWG 20

Angular gripper

Gripping force O.D. gripping

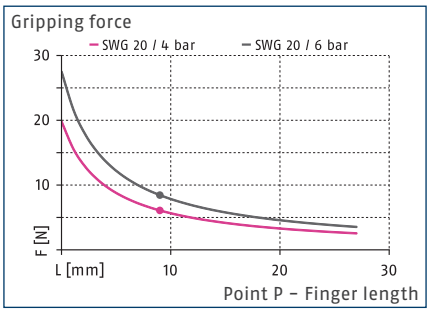

Closing moment curve

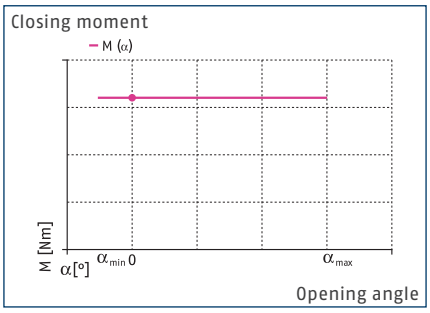

Dimensions and maximum loads

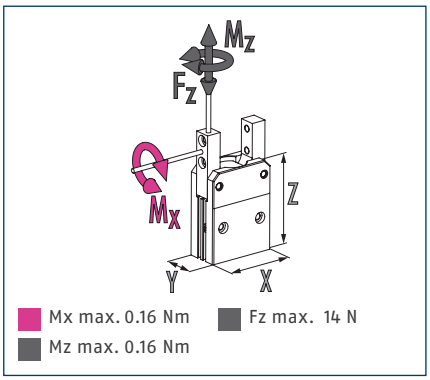

ⓘ The indicated torques and forces are static values, apply for each base jaw, and may occur simultaneously.

Technical data

Description		SWG 20
ID		0305105
Opening angle per jaw	[°]	15
Closed angle per jaw up to	[°]	7
Closing moment	[Nm]	0.11
Closing moment generated by spring	[Nm]	0.033
Weight	[kg]	0.019
Recommended workpiece weight	[kg]	0.043
Cylinder volume per double stroke	[cm³]	0.25
Min./nom./max. operating pressure	[bar]	4/6/6.5
Closing/opening time	[s]	0.015/0.02
Max. permissible finger length	[mm]	18
Max. permissible weight per finger	[kg]	0.02
IP protection class		30
Min./max. ambient temperature	[°C]	5/90
Repeat accuracy	[mm]	0.05
Dimensions X x Y x Z	[mm]	23.5 x 10 x 35

Main view

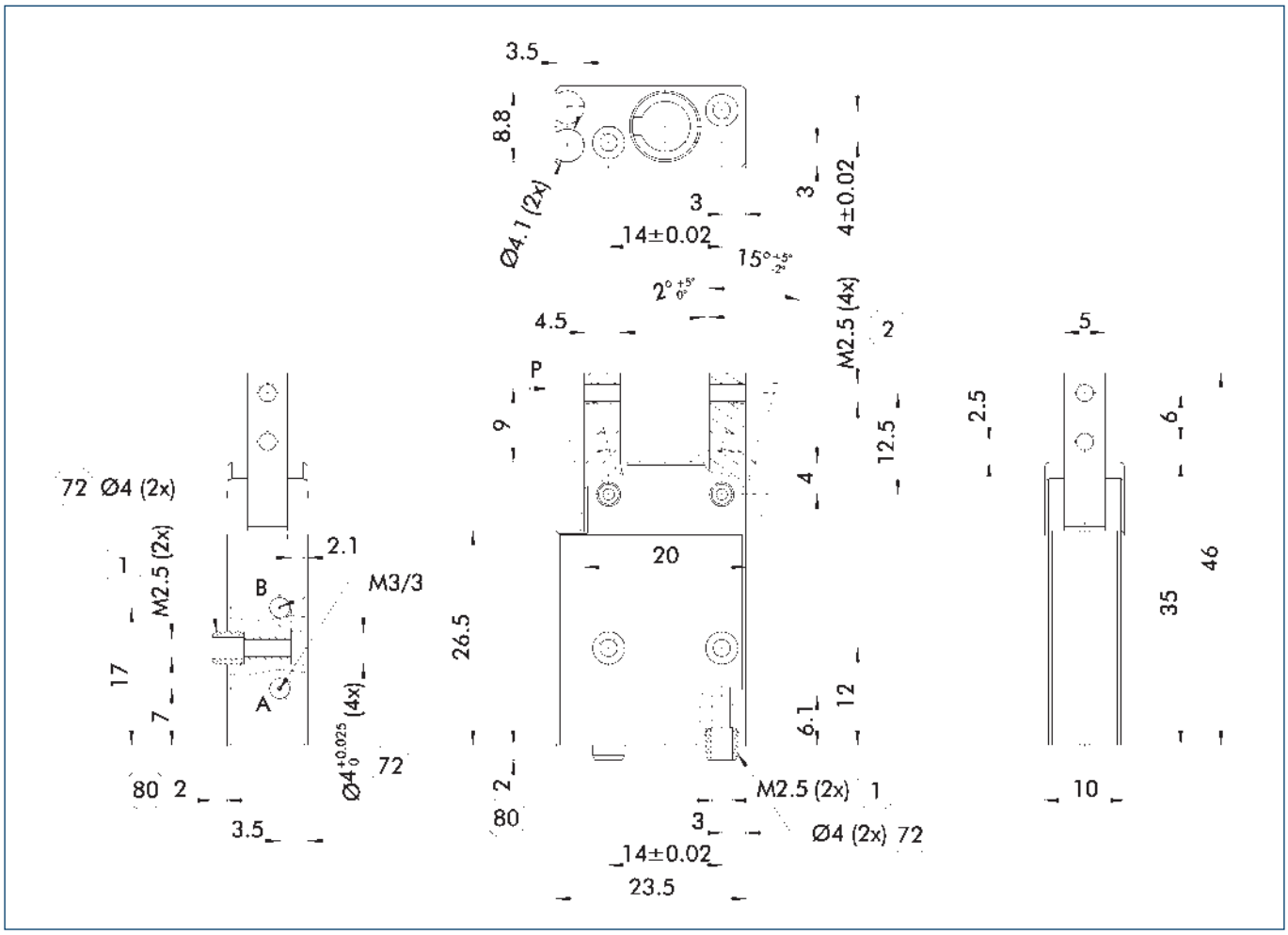

The drawing shows the gripper in the basic version with closed jaws, without dimensional consideration of the options described below.

ⓘ The SDV-P pressure maintenance valve can be used as a gripping force maintenance device (see catalog section on accessories).

A, a Main / direct connection, gripper opening

B, b Main / direct connection, gripper closing

(1) Gripper connection

(2) Finger connection

(72) Fit for centering sleeves

(80) Depth of the centering sleeve hole in the counter part

Maximum permitted finger projection

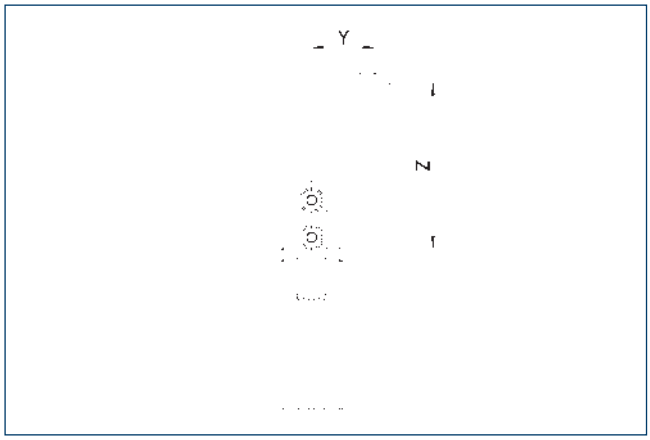

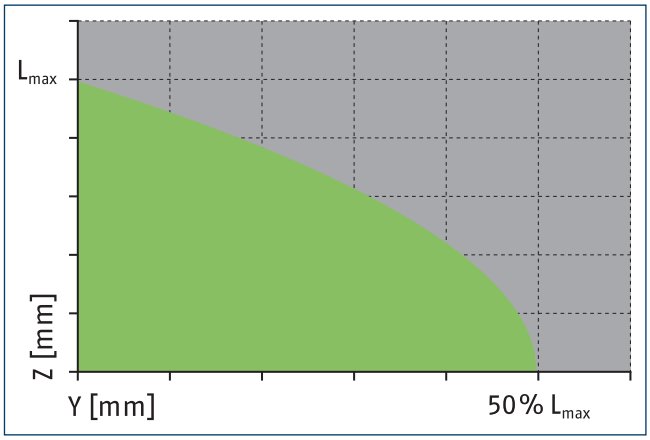

Permitted range

Inadmissible range

Lmax is equivalent to the maximum permitted finger length, see the technical data table.

SDV-P pressure maintenance valve

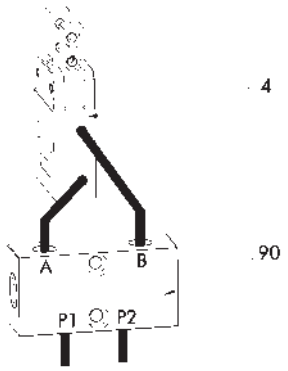

(4) Grippers

(90) SDV-P pressure maintenance valve

The SDV-P pressure maintenance valve ensures in emergency STOP situations that the pressure in the piston chamber of pneumatic gripper, swivel, linear, and quick-change modules is temporarily maintained.

Description	ID	Recommended hose diameter
		[mm]
Pressure maintenance valve		
SDV-P 04	0403130	6
Pressure maintenance valve with air bleed screw		
SDV-P 04-E	0300120	6

ⓘ In order to achieve the specified closing and opening time for each gripper variant, the recommended hose diameter must be used. The direct allocation of the respective variant of the gripper for the respective SDV-P can be found at schunk.com.

Monitoring for stacked arrangements

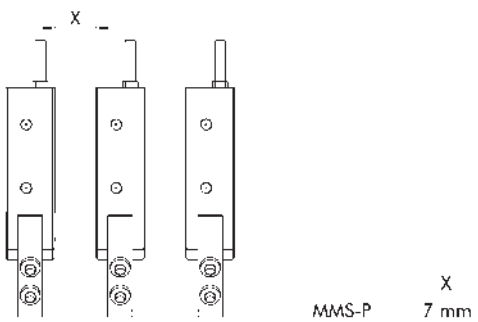

CAUTION: Monitoring is carried out by magnetic switches, and in case of side-by-side assembly of several units, a minimum distance of X mm between the units must be maintained.

Modular Assembly Automation

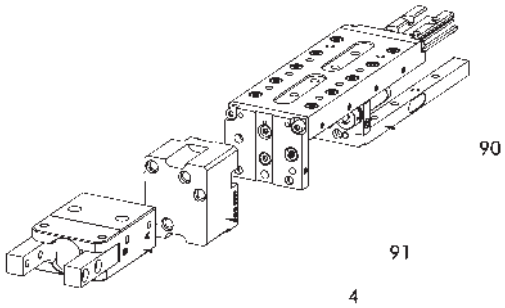

(4) Grippers

(90) Linear module CLM/KLM/LM/ELP/ELM/ELS/HLM

(91) ASG adapter plate

Grippers and linear modules can be combined with standard adapter plates from the modular assembly system. For more information see our main catalog "Modular Assembly Automation".

MMS-P programmable magnetic switch

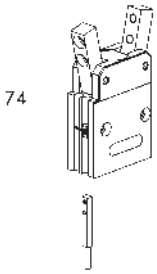

74 Limit stop for sensor

Position monitoring with two programmable positions per sensor. End position monitoring for mounting in the C-slot.

Description	ID	Often combined
Programmable magnetic switch		
MMSK-P 22-S-PNP	0301371	
MMS-P 22-S-M8-PNP	0301370	●
Connection cables		
KA GLN0804-LK-00500-A	0307767	●
KA GLN0804-LK-01000-A	0307768	
KA WLN0804-LK-00500-A	0307765	
KA WLN0804-LK-01000-A	0307766	
Clip for connector/socket		
CLI-M8	0301463	
Sensor distributor		
V2-M8-4P-2XM8-3P	0301380	

ⓘ One sensor is required per unit for monitoring two positions. Extension cables and sensor distributors are optionally available. Additional product variants of the sensor, and further information and technical data can be found in the catalog chapter sensor systems.

SWG 25

Angular gripper

Gripping force O.D. gripping

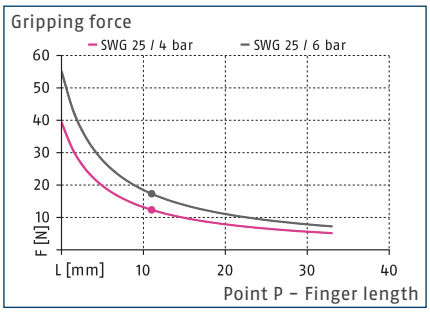

Closing moment curve

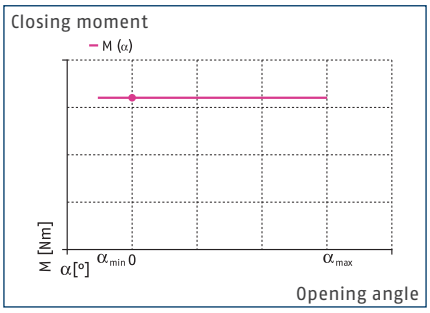

Dimensions and maximum loads

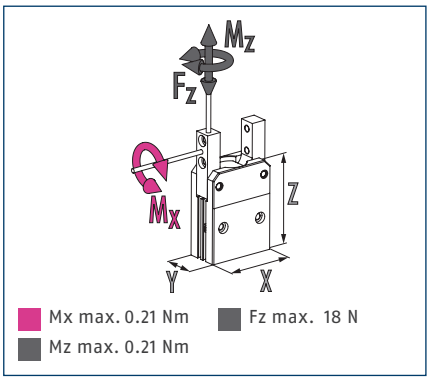

ⓘ The indicated torques and forces are static values, apply for each base jaw, and may occur simultaneously.

Technical data

Description		SWG 25
ID		0305106
Opening angle per jaw	[°]	15
Closed angle per jaw up to	[°]	7
Closing moment	[Nm]	0.28
Closing moment generated by spring	[Nm]	0.08
Weight	[kg]	0.035
Recommended workpiece weight	[kg]	0.09
Cylinder volume per double stroke	[cm³]	0.4
Min./nom./max. operating pressure	[bar]	4/6/6.5
Closing/opening time	[s]	0.015/0.02
Max. permissible finger length	[mm]	22
Max. permissible weight per finger	[kg]	0.028
IP protection class		30
Min./max. ambient temperature	[°C]	5/90
Repeat accuracy	[mm]	0.05
Dimensions X x Y x Z	[mm]	28 x 12 x 42

Main view

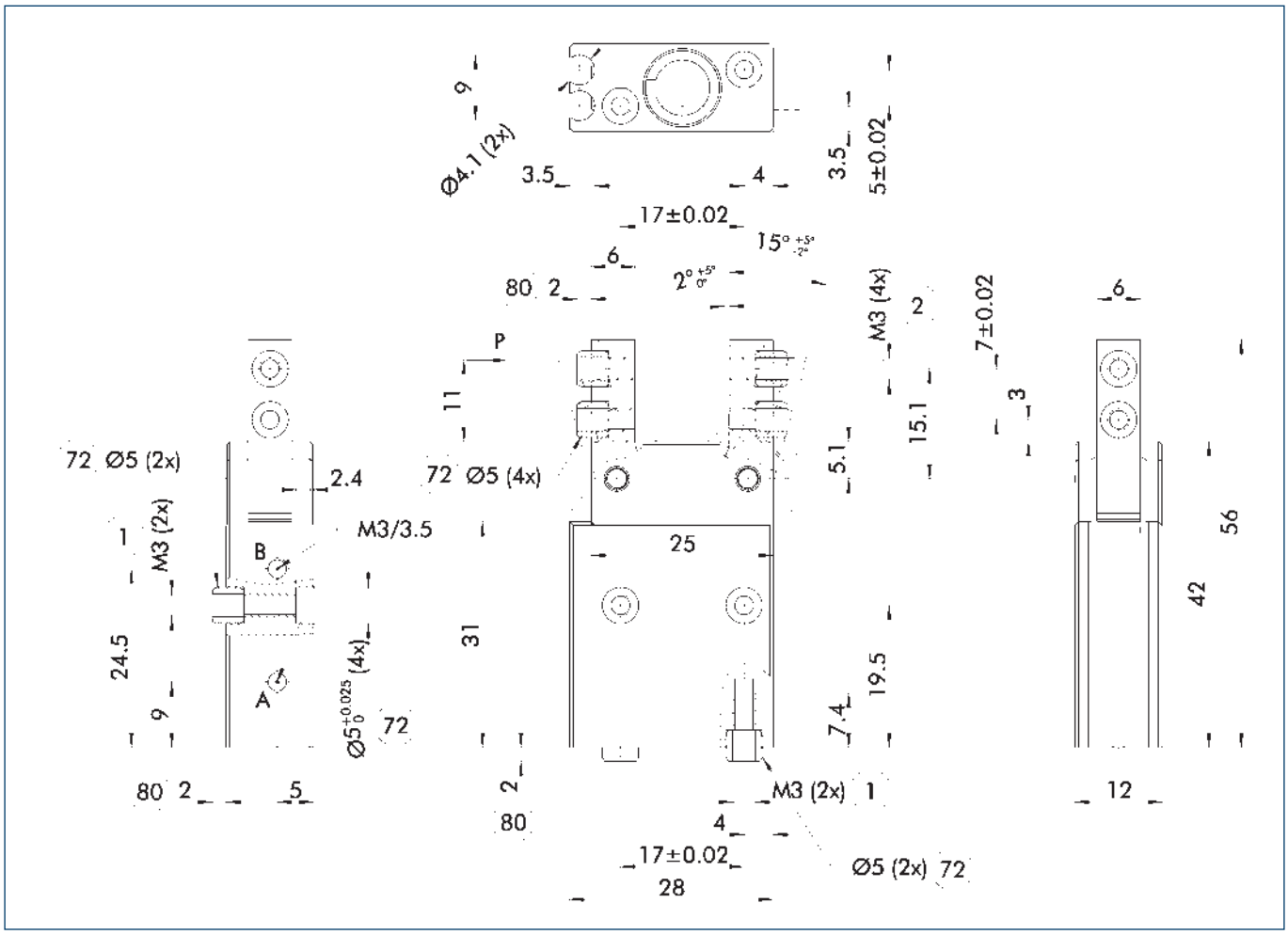

The drawing shows the gripper in the basic version with closed jaws, without dimensional consideration of the options described below.

ⓘ The SDV-P pressure maintenance valve can be used as a gripping force maintenance device (see catalog section on accessories).

A, a Main / direct connection, gripper opening

B, b Main / direct connection, gripper closing

(1) Gripper connection

(2) Finger connection

(72) Fit for centering sleeves

(80) Depth of the centering sleeve hole in the counter part

Maximum permitted finger projection

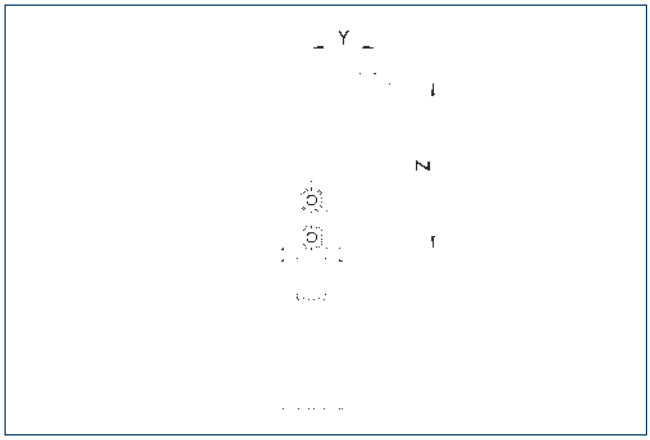

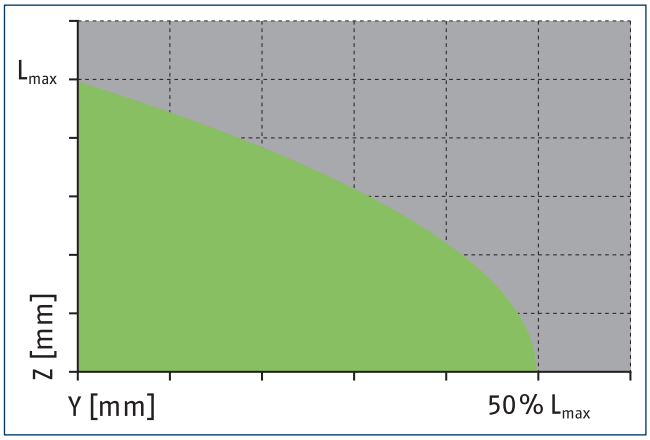

Permitted range

Inadmissible range

Lmax is equivalent to the maximum permitted finger length, see the technical data table.

SDV-P pressure maintenance valve

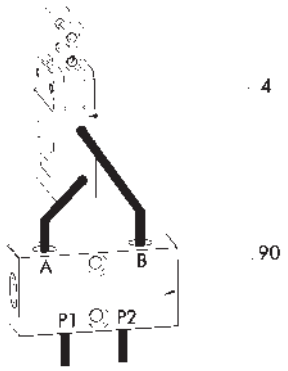

(4) Grippers

(90) SDV-P pressure maintenance valve

The SDV-P pressure maintenance valve ensures in emergency STOP situations that the pressure in the piston chamber of pneumatic gripper, swivel, linear, and quick-change modules is temporarily maintained.

Description	ID	Recommended hose diameter
		[mm]
Pressure maintenance valve		
SDV-P 04	0403130	6
Pressure maintenance valve with air bleed screw		
SDV-P 04-E	0300120	6

ⓘ In order to achieve the specified closing and opening time for each gripper variant, the recommended hose diameter must be used. The direct allocation of the respective variant of the gripper for the respective SDV-P can be found at schunk.com.

Monitoring for stacked arrangements

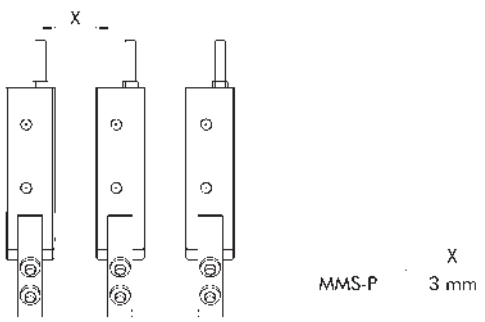

CAUTION: Monitoring is carried out by magnetic switches, and in case of side-by-side assembly of several units, a minimum distance of X mm between the units must be maintained.

Modular Assembly Automation

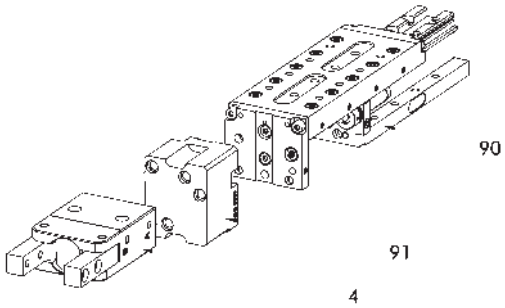

(4) Grippers

(90) Linear module CLM/KLM/LM/ELP/ELM/ELS/HLM

(91) ASG adapter plate

Grippers and linear modules can be combined with standard adapter plates from the modular assembly system. For more information see our main catalog "Modular Assembly Automation".

MMS-P programmable magnetic switch

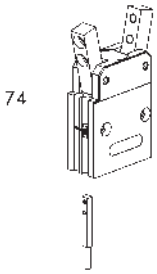

74 Limit stop for sensor

Position monitoring with two programmable positions per sensor. End position monitoring for mounting in the C-slot.

Description	ID	Often combined
Programmable magnetic switch		
MMSK-P 22-S-PNP	0301371	
MMS-P 22-S-M8-PNP	0301370	●
Connection cables		
KA GLN0804-LK-00500-A	0307767	●
KA GLN0804-LK-01000-A	0307768	
KA WLN0804-LK-00500-A	0307765	
KA WLN0804-LK-01000-A	0307766	
Clip for connector/socket		
CLI-M8	0301463	
Sensor distributor		
V2-M8-4P-2XM8-3P	0301380	

ⓘ One sensor is required per unit for monitoring two positions. Extension cables and sensor distributors are optionally available. Additional product variants of the sensor, and further information and technical data can be found in the catalog chapter sensor systems.

SWG 32

Angular gripper

Gripping force O.D. gripping

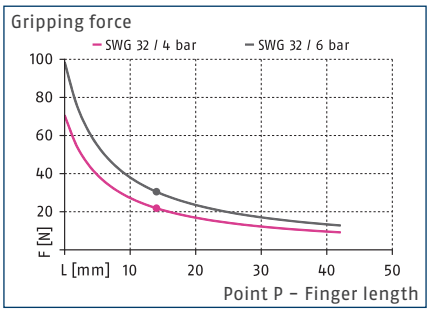

Closing moment curve

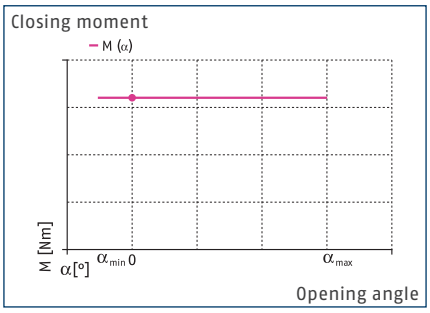

Dimensions and maximum loads

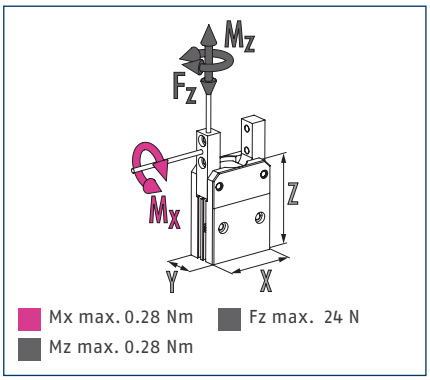

ⓘ The indicated torques and forces are static values, apply for each base jaw, and may occur simultaneously.

Technical data

Description		SWG 32
ID		0305107
Opening angle per jaw	[°]	15
Closed angle per jaw up to	[°]	7
Closing moment	[Nm]	0.62
Closing moment generated by spring	[Nm]	0.18
Weight	[kg]	0.069
Recommended workpiece weight	[kg]	0.156
Cylinder volume per double stroke	[cm³]	0.85
Min./nom./max. operating pressure	[bar]	4/6/6.5
Closing/opening time	[s]	0.02/0.025
Max. permissible finger length	[mm]	28
Max. permissible weight per finger	[kg]	0.036
IP protection class		30
Min./max. ambient temperature	[°C]	5/90
Repeat accuracy	[mm]	0.05
Dimensions X x Y x Z	[mm]	35 x 16 x 48

Main view

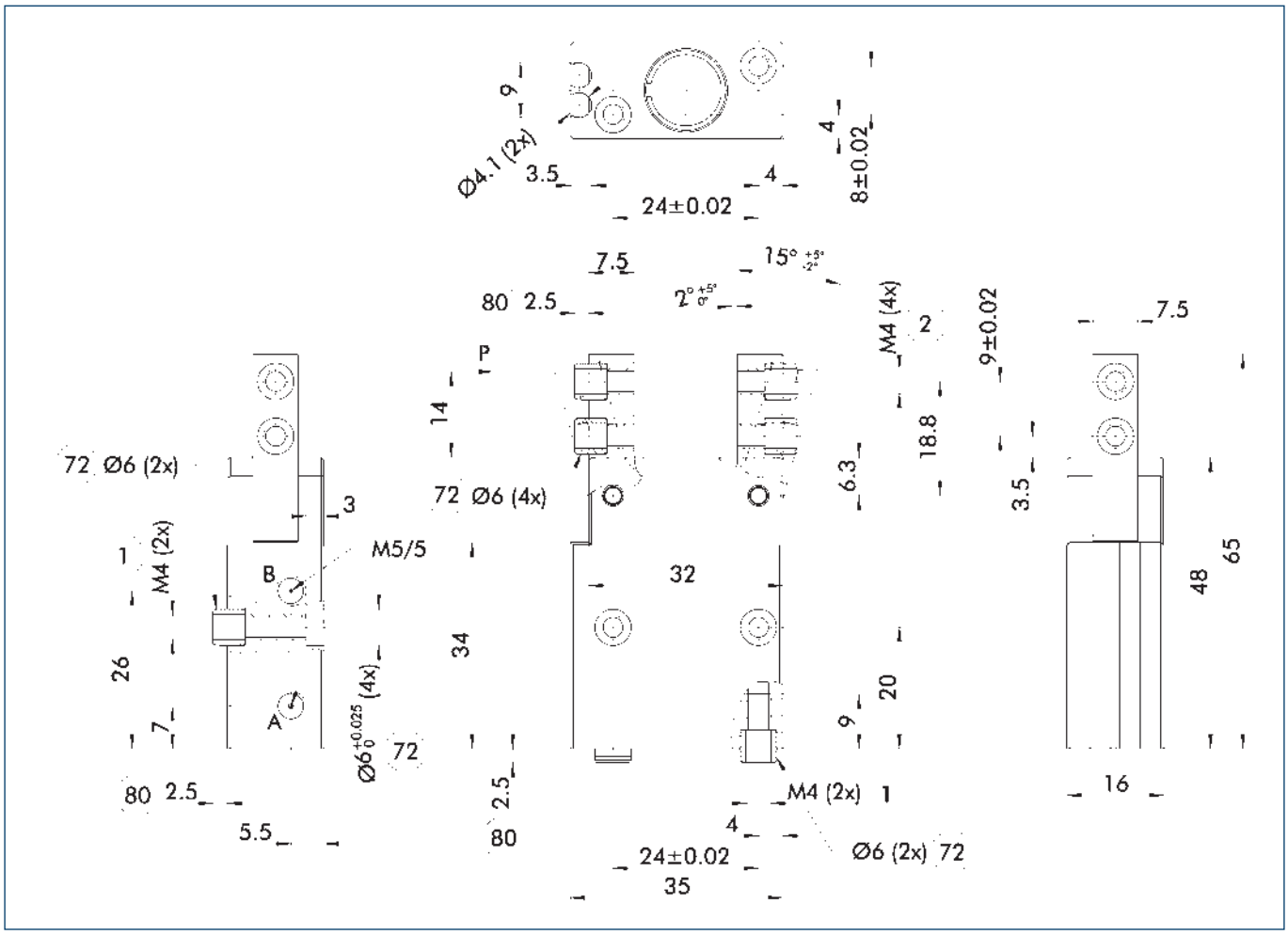

The drawing shows the gripper in the basic version with closed jaws, without dimensional consideration of the options described below.

ⓘ The SDV-P pressure maintenance valve can be used as a gripping force maintenance device (see catalog section on accessories).

A, a Main / direct connection, gripper opening

B, b Main / direct connection, gripper closing

(1) Gripper connection

(2) Finger connection

(72) Fit for centering sleeves

(80) Depth of the centering sleeve hole in the counter part

Maximum permitted finger projection

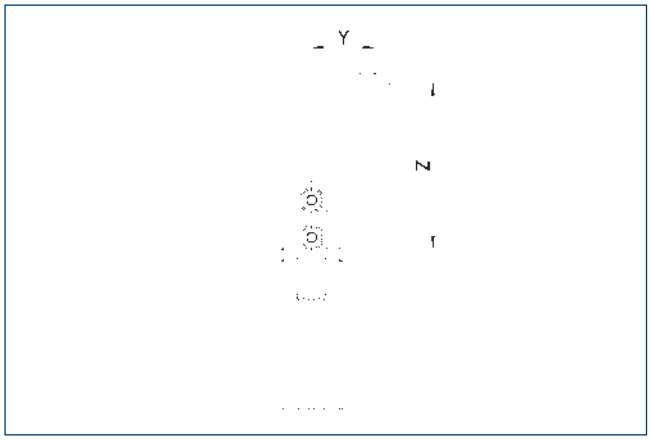

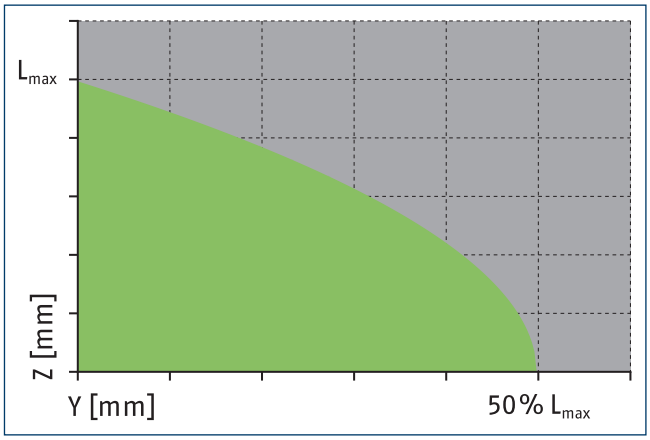

Permitted range

Inadmissible range

Lmax is equivalent to the maximum permitted finger length, see the technical data table.

SDV-P pressure maintenance valve

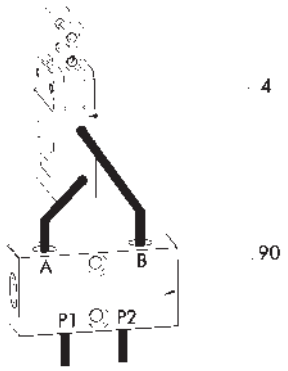

(4) Grippers

(90) SDV-P pressure maintenance valve

The SDV-P pressure maintenance valve ensures in emergency STOP situations that the pressure in the piston chamber of pneumatic gripper, swivel, linear, and quick-change modules is temporarily maintained.

Description	ID	Recommended hose diameter
		[mm]
Pressure maintenance valve		
SDV-P 04	0403130	6
Pressure maintenance valve with air bleed screw		
SDV-P 04-E	0300120	6

ⓘ In order to achieve the specified closing and opening time for each gripper variant, the recommended hose diameter must be used. The direct allocation of the respective variant of the gripper for the respective SDV-P can be found at schunk.com.

Monitoring for stacked arrangements

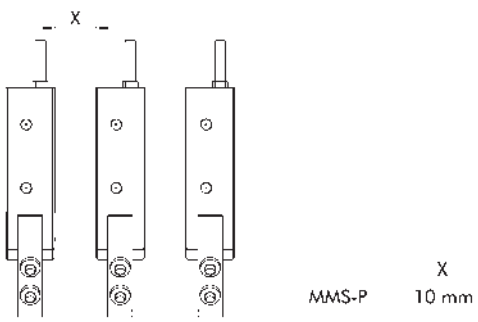

CAUTION: Monitoring is carried out by magnetic switches, and in case of side-by-side assembly of several units, a minimum distance of X mm between the units must be maintained.

Modular Assembly Automation

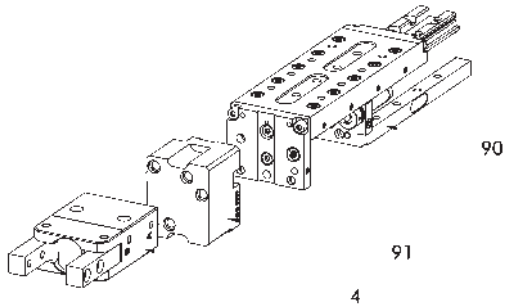

(4) Grippers

(90) Linear module CLM/KLM/LM/ELP/ELM/ELS/HLM

(91) ASG adapter plate

Grippers and linear modules can be combined with standard adapter plates from the modular assembly system. For more information see our main catalog "Modular Assembly Automation".

MMS-P programmable magnetic switch

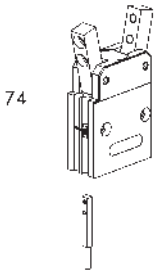

74 Limit stop for sensor

Position monitoring with two programmable positions per sensor. End position monitoring for mounting in the C-slot.

Description	ID	Often combined
Programmable magnetic switch		
MMSK-P 22-S-PNP	0301371	
MMS-P 22-S-M8-PNP	0301370	●
Connection cables		
KA GLN0804-LK-00500-A	0307767	●
KA GLN0804-LK-01000-A	0307768	
KA WLN0804-LK-00500-A	0307765	
KA WLN0804-LK-01000-A	0307766	
Clip for connector/socket		
CLI-M8	0301463	
Sensor distributor		
V2-M8-4P-2XM8-3P	0301380	

ⓘ One sensor is required per unit for monitoring two positions. Extension cables and sensor distributors are optionally available. Additional product variants of the sensor, and further information and technical data can be found in the catalog chapter sensor systems.

SWG 40

Angular gripper

Gripping force O.D. gripping

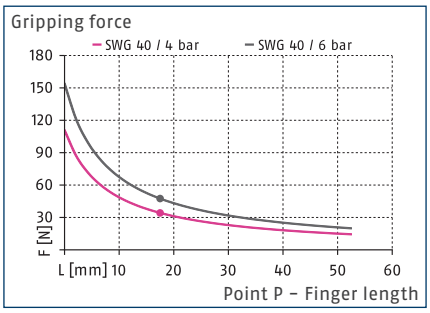

Closing moment curve

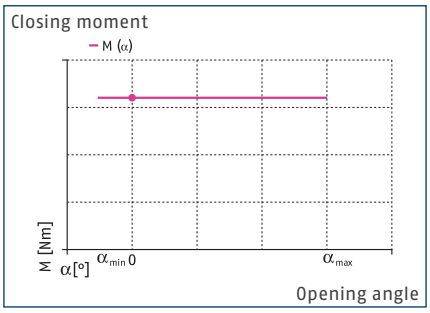

Dimensions and maximum loads

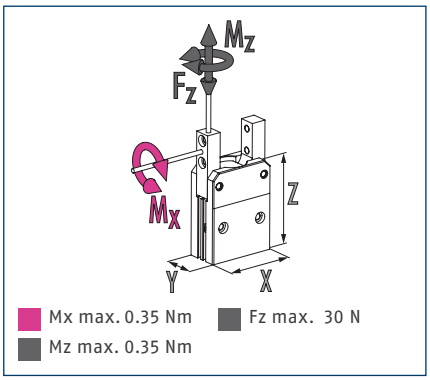

ⓘ The indicated torques and forces are static values, apply for each base jaw, and may occur simultaneously.

Technical data

Description		SWG 40
ID		0305108
Opening angle per jaw	[°]	15
Closed angle per jaw up to	[°]	7
Closing moment	[Nm]	1.2
Closing moment generated by spring	[Nm]	0.36
Weight	[kg]	0.106
Recommended workpiece weight	[kg]	0.24
Cylinder volume per double stroke	[cm³]	1.6
Min./nom./max. operating pressure	[bar]	4/6/6.5
Closing/opening time	[s]	0.025/0.03
Max. permissible finger length	[mm]	35
Max. permissible weight per finger	[kg]	0.05
IP protection class		30
Min./max. ambient temperature	[°C]	5/90
Repeat accuracy	[mm]	0.05
Dimensions X x Y x Z	[mm]	40 x 20 x 52

Main view

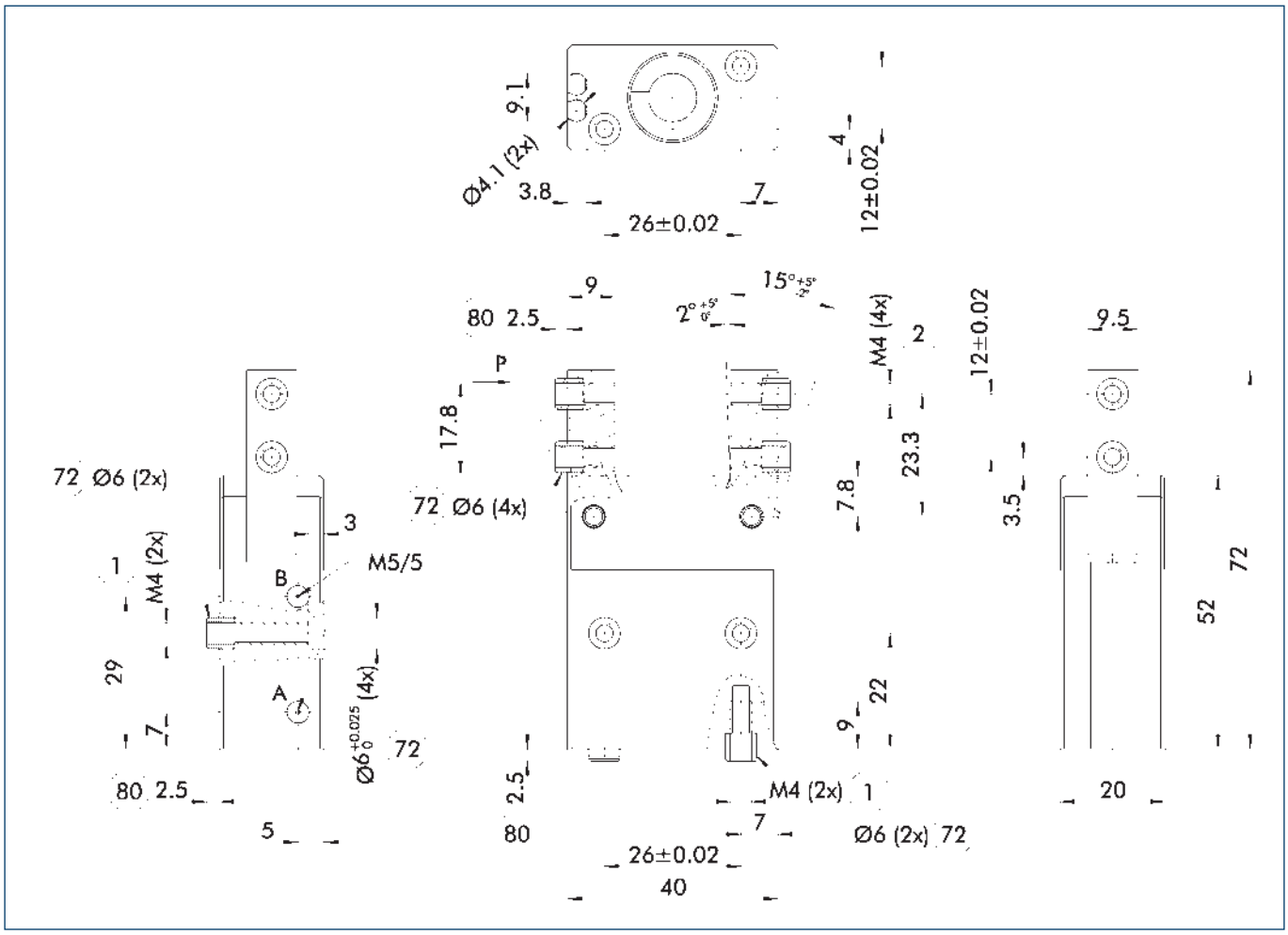

The drawing shows the gripper in the basic version with closed jaws, without dimensional consideration of the options described below.

ⓘ The SDV-P pressure maintenance valve can be used as a gripping force maintenance device (see catalog section on accessories).

A, a Main / direct connection, gripper opening

B, b Main / direct connection, gripper closing

(1) Gripper connection

(2) Finger connection

(72) Fit for centering sleeves

(80) Depth of the centering sleeve hole in the counter part

Maximum permitted finger projection

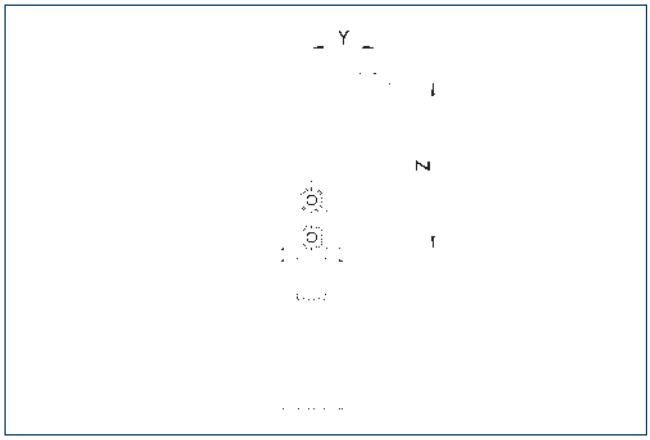

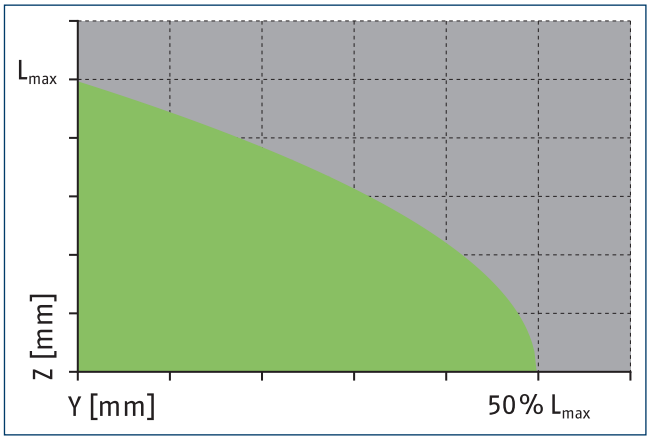

Permitted range

Inadmissible range

Lmax is equivalent to the maximum permitted finger length, see the technical data table.

SDV-P pressure maintenance valve

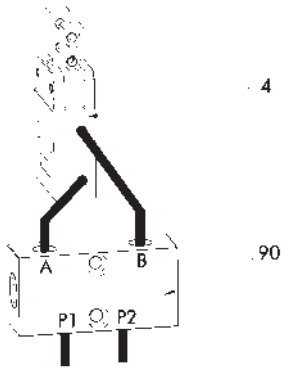

(4) Grippers

(90) SDV-P pressure maintenance valve

The SDV-P pressure maintenance valve ensures in emergency STOP situations that the pressure in the piston chamber of pneumatic gripper, swivel, linear, and quick-change modules is temporarily maintained.

Description	ID	Recommended hose diameter
		[mm]
Pressure maintenance valve		
SDV-P 04	0403130	6
Pressure maintenance valve with air bleed screw		
SDV-P 04-E	0300120	6

ⓘ In order to achieve the specified closing and opening time for each gripper variant, the recommended hose diameter must be used. The direct allocation of the respective variant of the gripper for the respective SDV-P can be found at schunk.com.

Monitoring for stacked arrangements

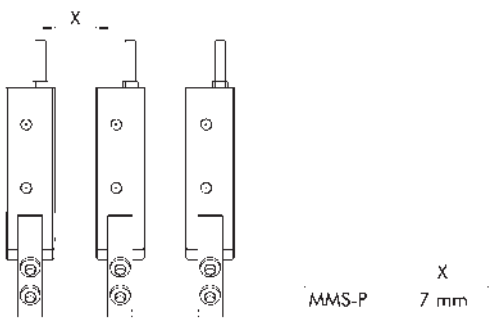

CAUTION: Monitoring is carried out by magnetic switches, and in case of side-by-side assembly of several units, a minimum distance of X mm between the units must be maintained.

Modular Assembly Automation

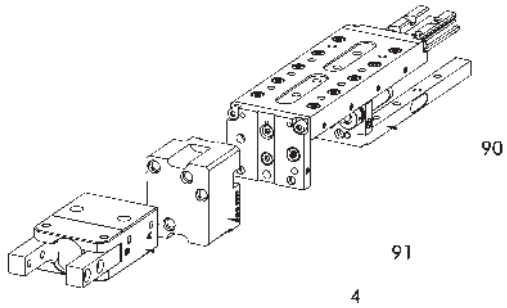

(4) Grippers

(90) Linear module CLM/KLM/LM/ELP/ELM/ELS/HLM

(91) ASG adapter plate

Grippers and linear modules can be combined with standard adapter plates from the modular assembly system. For more information see our main catalog "Modular Assembly Automation".

MMS-P programmable magnetic switch

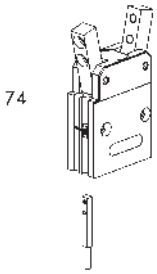

74 Limit stop for sensor

Position monitoring with two programmable positions per sensor. End position monitoring for mounting in the C-slot.

Description	ID	Often combined
Programmable magnetic switch		
MMSK-P 22-S-PNP	0301371	
MMS-P 22-S-M8-PNP	0301370	●
Connection cables		
KA GLN0804-LK-00500-A	0307767	●
KA GLN0804-LK-01000-A	0307768	
KA WLN0804-LK-00500-A	0307765	
KA WLN0804-LK-01000-A	0307766	
Clip for connector/socket		
CLI-M8	0301463	
Sensor distributor		
V2-M8-4P-2XM8-3P	0301380	

ⓘ One sensor is required per unit for monitoring two positions. Extension cables and sensor distributors are optionally available. Additional product variants of the sensor, and further information and technical data can be found in the catalog chapter sensor systems.

SWG 50

Angular gripper

Gripping force O.D. gripping

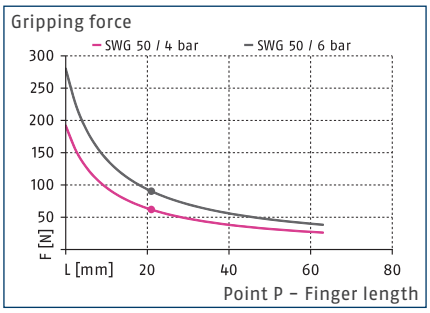

Closing moment curve

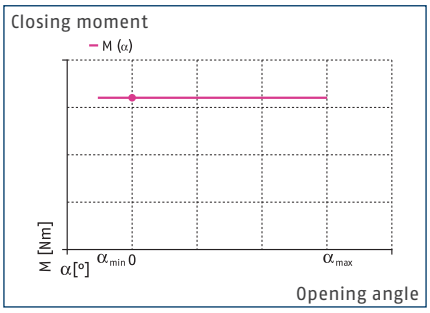

Dimensions and maximum loads

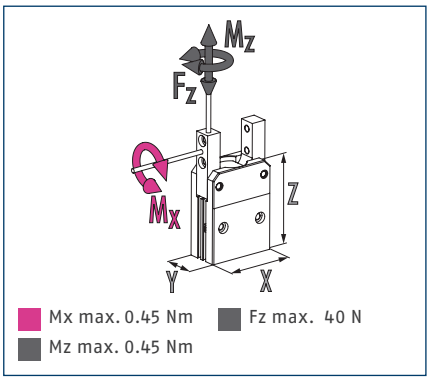

ⓘ The indicated torques and forces are static values, apply for each base jaw, and may occur simultaneously.

Technical data

Description		SWG 50
ID		0305109
Opening angle per jaw	[°]	15
Closed angle per jaw up to	[°]	7
Closing moment	[Nm]	2.8
Closing moment generated by spring	[Nm]	0.6
Weight	[kg]	0.213
Recommended workpiece weight	[kg]	0.46
Cylinder volume per double stroke	[cm³]	3.8
Min./nom./max. operating pressure	[bar]	4/6/6.5
Closing/opening time	[s]	0.03/0.06
Max. permissible finger length	[mm]	42
Max. permissible weight per finger	[kg]	0.08
IP protection class		30
Min./max. ambient temperature	[°C]	5/90
Repeat accuracy	[mm]	0.05
Dimensions X x Y x Z	[mm]	50 x 25 x 66

Main view

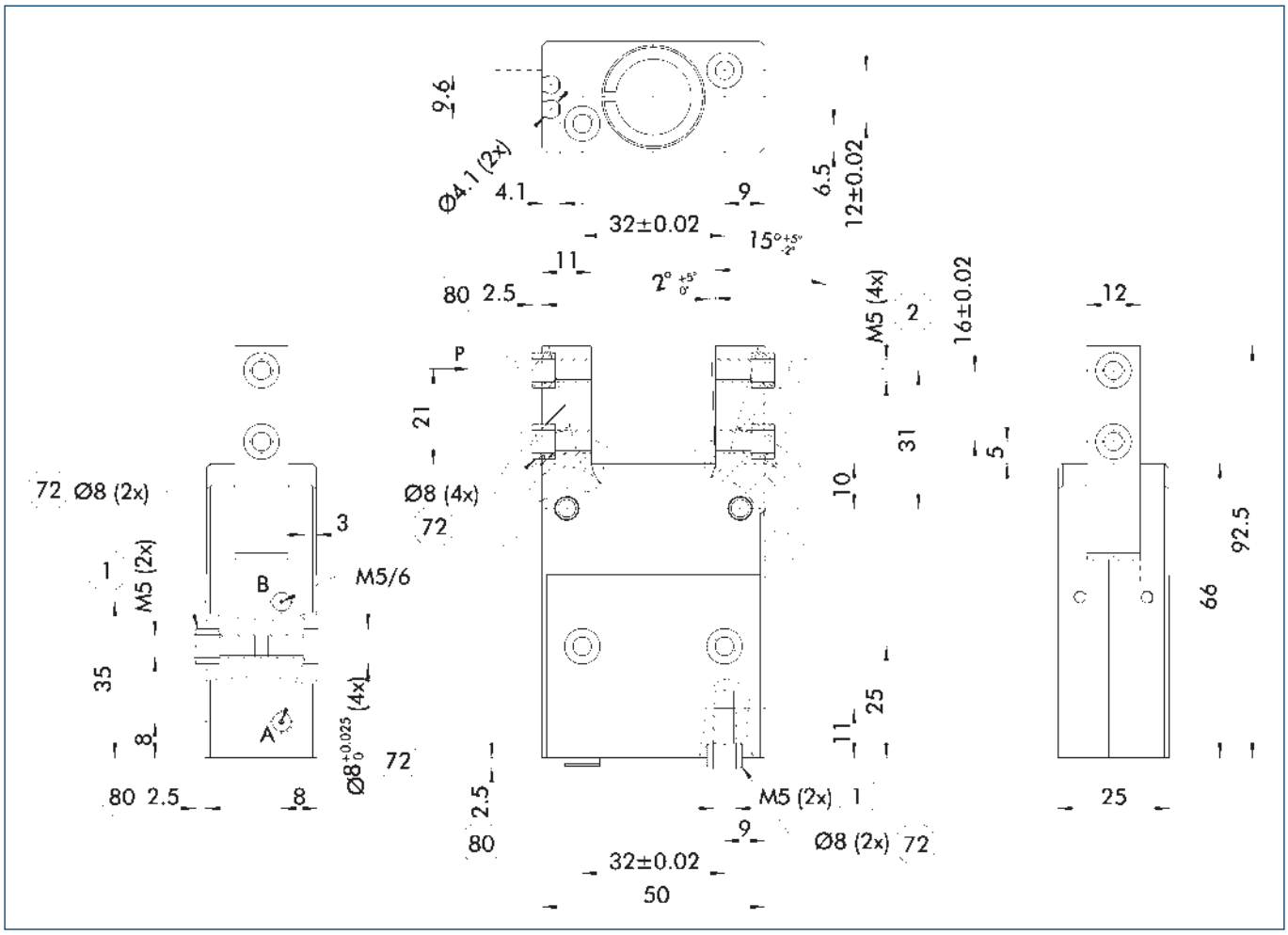

The drawing shows the gripper in the basic version with closed jaws, without dimensional consideration of the options described below.

ⓘ The SDV-P pressure maintenance valve can be used as a gripping force maintenance device (see catalog section on accessories).

A, a Main / direct connection, gripper opening

B, b Main / direct connection, gripper closing

(1) Gripper connection

(2) Finger connection

(72) Fit for centering sleeves

(80) Depth of the centering sleeve hole in the counter part

Maximum permitted finger projection

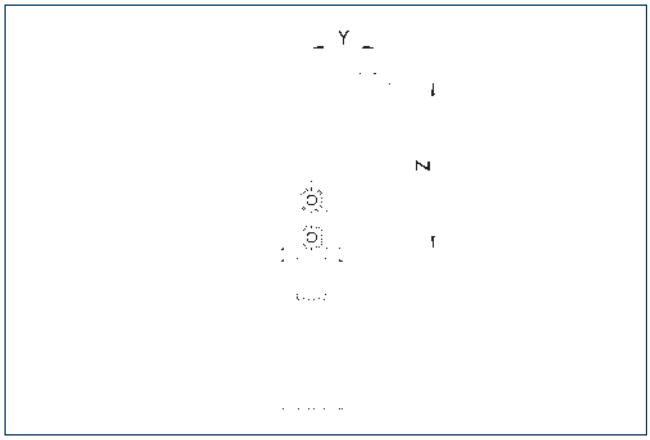

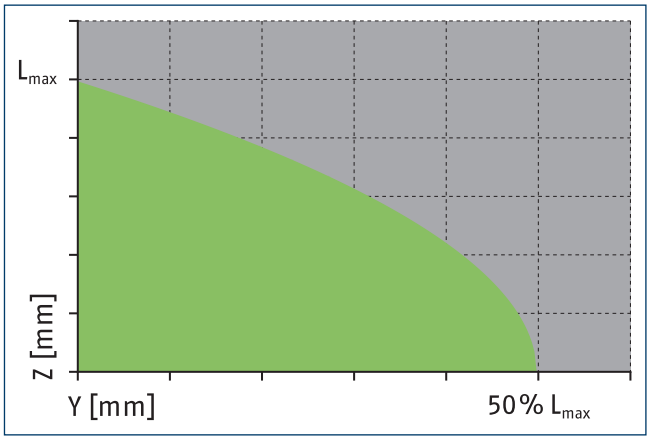

Permitted range

Inadmissible range

Lmax is equivalent to the maximum permitted finger length, see the technical data table.

SDV-P pressure maintenance valve

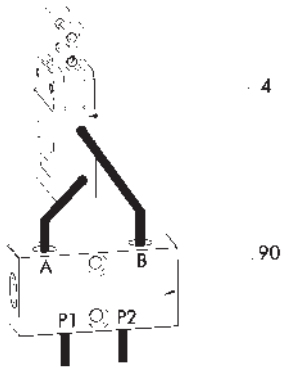

(4) Grippers

(90) SDV-P pressure maintenance valve

The SDV-P pressure maintenance valve ensures in emergency STOP situations that the pressure in the piston chamber of pneumatic gripper, swivel, linear, and quick-change modules is temporarily maintained.

Description	ID	Recommended hose diameter
		[mm]
Pressure maintenance valve		
SDV-P 04	0403130	6
Pressure maintenance valve with air bleed screw		
SDV-P 04-E	0300120	6

ⓘ In order to achieve the specified closing and opening time for each gripper variant, the recommended hose diameter must be used. The direct allocation of the respective variant of the gripper for the respective SDV-P can be found at schunk.com.

Monitoring for stacked arrangements

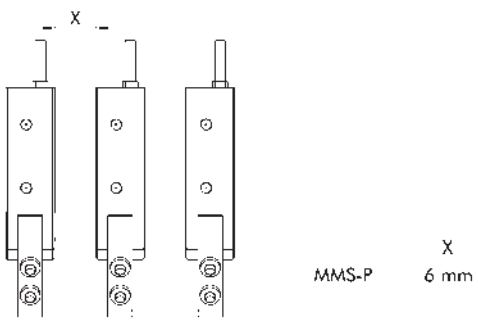

CAUTION: Monitoring is carried out by magnetic switches, and in case of side-by-side assembly of several units, a minimum distance of X mm between the units must be maintained.

Modular Assembly Automation

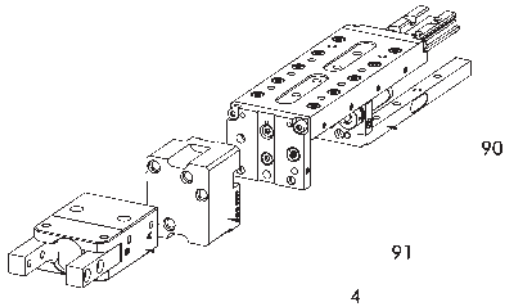

(4) Grippers

(90) Linear module CLM/KLM/LM/ELP/ELM/ELS/HLM

(91) ASG adapter plate

Grippers and linear modules can be combined with standard adapter plates from the modular assembly system. For more information see our main catalog "Modular Assembly Automation".

MMS-P programmable magnetic switch

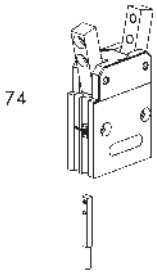

74 Limit stop for sensor

Position monitoring with two programmable positions per sensor. End position monitoring for mounting in the C-slot.

Description	ID	Often combined
Programmable magnetic switch		
MMSK-P 22-S-PNP	0301371	
MMS-P 22-S-M8-PNP	0301370	●
Connection cables		
KA GLN0804-LK-00500-A	0307767	●
KA GLN0804-LK-01000-A	0307768	
KA WLN0804-LK-00500-A	0307765	
KA WLN0804-LK-01000-A	0307766	
Clip for connector/socket		
CLI-M8	0301463	
Sensor distributor		
V2-M8-4P-2XM8-3P	0301380	

ⓘ One sensor is required per unit for monitoring two positions. Extension cables and sensor distributors are optionally available. Additional product variants of the sensor, and further information and technical data can be found in the catalog chapter sensor systems.

SCHUNK GmbH & Co. KG
Spann- und Greiftechnik

Bahnhofstr. 106 - 134
D-74348 Lauffen/Neckar
Tel. +49-7133-103-0
Fax +49-7133-103-2399
info@de.schunk.com
schunk.com

Folgen Sie uns | *Follow us*

2024-10-16 © 2024 SCHUNK GmbH & Co. KG