PowerLogic™

Energy management, revenue metering and power quality monitoring

Electrical network management

www.se.com

Life Is On | Schneider Electric

Contents

Introduction to PowerLogic™	**4**
Product Panorama	**8**
Current Transformers	**16**
Panel Instruments DIN ammeter/voltmeter	**35**
Basic Energy Metering iEM2xxx, iEM3000, PM3000, and PowerTag Energy series	**46**
Wireless Products PowerTag control and HeatTag	**117**
Basic Multi-function Metering PM5000 and PM5350 series	**125**
Advanced Metering PM8000 and ION9000 series	**146**
Advanced Utility Metering ION7400 and ION8650 series	**170**
Multi-circuit Metering HDPM6000, BCPM EM4000, EM4800, and EM4900 series	**192**
Retrofit Products EM3500 and EM4200 series	**242**
Insulation Monitoring Devices Vigilohm insulation monitoring devices	**255**
EcoStruxure™ Panel Server Entry, Universal and Advanced	**262**
Commercial Reference Numbers	**273**

Clicking on a **Commercial Reference Number** or scanning the product's **QR Code** links you to further product information on **www.se.com**

PowerLogic™ System is…

Schneider Electric believes every business can increase productivity while consuming less and achieving energy savings of 10% to 30%.

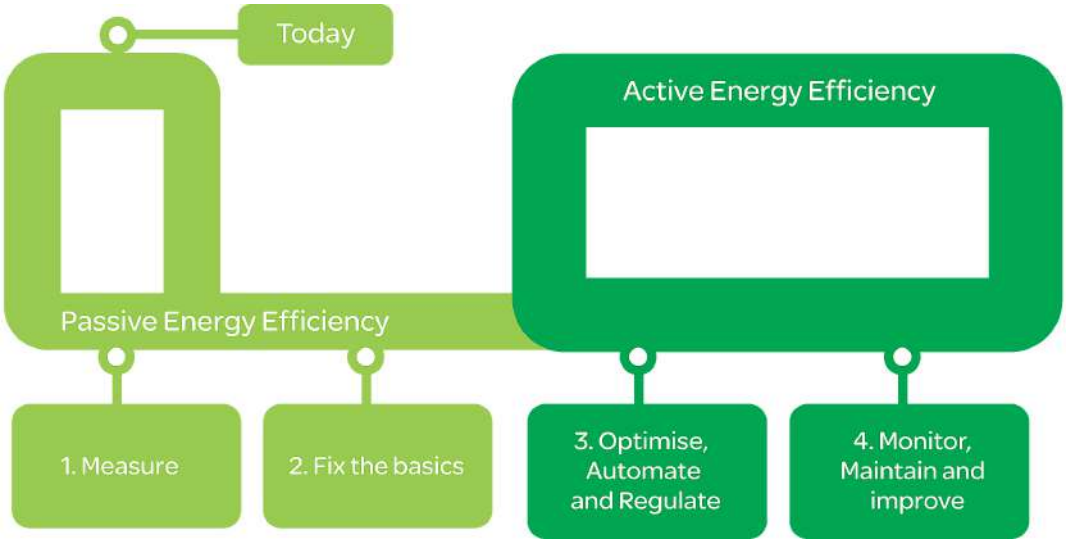

PowerLogic technology forms one part of your total energy management solution from Schneider Electric. As the global energy management specialist, we offer end-to-end power, building and process management solutions that help you optimize energy use and costs, improve performance, enhance comfort and safety, and deliver uninterrupted service while taking responsible care of our planet.

Our expert services can help you audit your energy use and build your energy action plan. From power factor correction systems, harmonic filtering and variable speed drives to HVAC and lighting controls, we offer a complete range of energy efficient technologies.

Saving energy reduces costs and pollution, but you need the tools to uncover all opportunities, avoid risks, track progress against goals, and verify success. Schneider Electric provides these tools via the world's most advanced energy intelligence technology: PowerLogic.

A PowerLogic system of meters, software and power quality solutions help manage all energy assets, every second of the day. A PowerLogic system enables all stakeholders, from CEO to facility and engineering managers, to respond quickly to potential problems and manage energy in financial and environmental terms.

PowerLogic technology delivers the key performance indicators and analytics that you need to strategically balance emissions, efficiency, reliability and cost.

Gain energy insight and control with PowerLogic™ systems

Cutting-edge technology to increase profitability

PowerLogic technology converts the complex dynamics governing the relationship between power generation and distribution on the utility side, and energy consumption, cost and reliability on the consumer side, into timely, easily understood information. Businesses can use this powerful to improve tactical actions and strategic decision making.

From a single facility to an entire enterprise, PowerLogic meters monitor key distribution points 24 hours a day. Whether from generators, substations, service entrances, mains, feeders, loads or 3rd party equipment and systems, PowerLogic technology tracks, records and reports all real-time conditions and historical performance data. Intuitive web-based interfaces give stakeholders access to this data as well as advanced analytics, alarm annunciation and control capabilities. It supports comprehensive energy management programs by tracking performance and empowering you to make effective decisions.

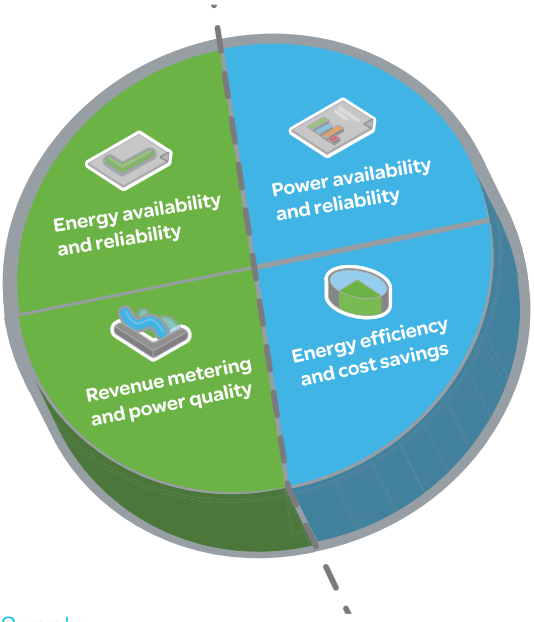

Supply

Energy availability and reliability

- Improve T&D network reliability
- Enhance substation automation
- Maximize the use of your existing infrastructure

Revenue metering and power quality

- Maximize metering accuracy at all interchange points
- Verify compliance with new power quality standards
- Analyse and isolate the source of power quality problems

Demand

Power availability and reliability

- Validate that power quality complies with the energy contract
- Identify power quality issues and fix them quickly with reliable mitigation solutions
- Improve response to power-related problems
- Leverage existing infrastructure capacity and avoid over-building
- Support proactive maintenance to prolong asset life

Energy efficiency and cost savings

- Measure efficiency, reveal opportunities and verify savings
- Manage greenhouse gas emissions
- Allocate energy costs to departments or processes
- Reduce peak demand and power factor penalties
- Enable participation in load curtailment programs (e.g. demand response)
- Strengthen rate negotiation with energy suppliers
- Identify billing discrepancies
- Sub-bill tenants for energy costs

Market segments

Industry

From finance to engineering, PowerLogic technology gives industry professionals the energy intelligence and control they need to support strategic decisions and establish best energy practices. It will help you reduce operational costs and meet new emissions standards without compromising production schedules or product quality.

Key points are monitored throughout your power distribution, building and backup systems. Enterprise-level software helps you maximize the use of your existing energy assets, increase energy efficiency and avoid demand or power factor penalties. Use it to uncover and solve hidden power problems that can shorten equipment life or cause costly downtime.

- Cost allocation
- Procurement optimization
- Power factor correction
- Continuity of service even in case of an earth fault

Buildings

Building managers through operations staff can cut energy and maintenance costs without effecting the comfort or productivity of their tenants, employees, students, patients or customers. A PowerLogic system will track all utilities and equipment conditions, and enterprise-level software will help you analyse and improve electrical reliability.

You can forecast energy requirements, optimize multi-site contracts and accurately allocate or sub-bill costs. Key performance indicators help you find and sustain energy savings, reduce emissions and meet “green” building standards in order to increase asset value and attract or retain tenants.

- Tenant sub-billing
- Cost allocation
- Energy efficiency & benchmarking
- Procurement optimization
- Power availability
- Demand response / load curtailment

Utilities

Today's energy market is more complex than ever before. Whether you generate, transmit or distribute electricity, more stakeholders need shared access to timely, accurate energy data from more exchange points and you need to maintain power availability and reduce price volatility in the face of rising demand and transmission congestion. A PowerLogic energy information system helps you meet all of these challenges by:

- Metering all key interchange points with the highest possible accuracy
- Improving the quality of power delivered to your customers
- Ensuring the reliability and efficiency of your network and equipment

From advanced energy and power quality metering systems to enterprise-level analytic software and power quality mitigation solutions, PowerLogic systems deliver business-critical information that conventional metering, SCADA and billing systems cannot. It gives you the energy intelligence and control needed to track performance, stay informed of critical conditions and empower you to make strategic decisions. It will help you increase reliability, maximize the use of resources and improve service.

- Revenue metering
- Power quality monitoring
- Power availability and reliability
- Insulation monitoring

Critical infrastructure

PowerLogic technology helps keep your systems operating continuously and securely with an economical supply of energy. Whether you manage data, communication, transportation or environmental services, minimising the risk of power-related downtime and keeping costs under control is a priority.

A PowerLogic system monitors all power and cooling systems, accurately tracks their energy consumption, and allows you to identify and fix power quality issues as soon as they arise. Enterprise-level software delivers insightful diagnostics and metrics to help verify the reliability of your backup systems and maximize the use of existing capacity to defer new capital investments. You can also reveal energy inefficiencies and strengthen energy procurement across multiple sites.

- Infrastructure optimization
- Power quality analysis compliance
- Alarming and event notification
- Energy efficiency
- Cost allocation
- Procurement optimization

Panorama of the PowerLogic™ range

Use this panorama to select the most efficient products for your application needs

Current transformers

Panel instruments

CTs Ip / 5 A	Name	iAMP	iVLT	AMP/VLT	iFRE	iCH/iCI
current transformer	**Function**	ammeter, voltmeter	ammeter, voltmeter	ammeter, voltmeter	frequency meter	hour counter pulse counter
Installation i. Solid Core CTs ■ Insulated Cable, diameter 21 to 35 mm ■ busbar through transformer ■ cable connections ii. Split Core CTs ■ CT installation without the need to uninstall and reinstall power conductors ■ Cable and Busbar connections	**Applications**					
	Panel instrumentation					
	Panel instrumentation	**I / U**	**I / U**	**I / U**	**F**	**hours/pulses**
	Energy efficiency & cost					
	Sub-billing & cost allocation					
	Demand & load management					
	Billing analysis					
	Power availability & reliability					
	Compliance monitoring					
	Sag/swell, transient					
	Harmonics					
	Revenue metering					
	Revenue meter					
Characteristics i. Solid Core CTs ■ transformation ratio : 40/5 A to 6000/5 A ■ accuracy : class 0.5 to 3 ■ maximum rated operational voltage : 720 V AC ■ tropicalised range 25 °C to +60 °C (1) relative humidity > 95 % (1) Warning: some products are limited to +50 °C. ii. Split Core CTs ■ transformation ratio : 100/5A to 4000/5A ■ accuracy : class 0.5 to 3 ■ maximum rated operational voltage : 720 V AC ■ Cable connection : -5°C to +50°C relative humidity 5–85 % ■ Busbar connection : 5°C to +40°C relative humidity 5–85 %	**Characteristics**					
	Measurement accuracy	Class 1.5	± 0.5 % ± 1 digit	Class 1.5	± 0.5 % ± 1 digit	
	Installation	DIN rail 4 x 18 mm modules	DIN rail 2 x 18 mm modules	flush mounted 72 x 72 mm 96 x 96 mm	DIN rail 2 x 18 mm modules	iCI, iCH: DIN rail 2 x 18 mm modules CH: flush mount
	Measurement	iAMP: 30 A direct or external CT	iVLT: 600 V AC direct or external VT	VLT: 500 V AC direct or external VT AMP: external CT	400 V AC direct	
	Communication ports					
	Inputs / Outputs					
	Memory capacity					
page 16		page 36	page 37	page 38	page 37	page 42

Panorama of the PowerLogic™ range (cont'd)

Basic energy metering

Name	iEM2xxx Range iEM2000, iEM2100, iEM2400	iEM3000 Series	PM3000 Series	PowerTag Energy Series
Function	kilowatt-hour meter IEC 62052-31:2015 BS/EN/IEC 62053-21 BS/EN/IEC 62053-23 EN 50470-1:2006 EN 50470-3:2006 IEC 61557-12:2018	kilowatt-hour meters power and energy meters metering & sub-metering IEC 62052-31:2015 BS/EN/IEC 62053-21:2020 ed 2 BS/EN/IEC 62053-22:2020 ed 2 BS/EN/IEC 62053-23:2020 ed 2 EN 50470-1:2006 EN 50470-3:2006 IEC 61557-12:2018	metering & sub-metering Class 0.5S IEC 62053-22 Class 1 IEC 62053-21 Class 2 IEC 62053-23	wireless power & energy meter
Applications				
Panel instrumentation				
Panel instrumentation	E (in all range) I, U, F, P, Q ,S, PF (in selected ranges)	I, U, F, P, Q, S, PF, E (Power demand and current demand)	I, U, F, P, Q, S, PF, E (Power demand and current demand)	I, U, F, P, Q, S, PF, E (Depending on reference; Power demand depending on gateway)
Energy efficiency and cost				
Sub-billing & cost allocation				cost allocation only
Demand & load management				
Billing analysis				
Power availability & reliability				
Compliance monitoring				
Dip/swell, transient				
Harmonics				
Revenue metering				
Revenue meter				
Characteristics				
Measurement accuracy	Class 1 (Wh)/ Class 2 (VARh)	Class 0.5S / Class 1 (Wh) Class 2 (VARh)	Class 0.5	IEC 61557-12 PMD/DD Class 1 (active energy)
Installation	DIN rail 1, 2 x 18 mm modules	DIN rail 5, 7 x 18 mm modules	DIN rail	on product or on cables depending on the reference
Voltage measurement	up to 276 V (Ph-N) AC direct	100 - 277 V L-N, 173 - 480 V L-L up to 1MV AC (ext VT)	50 V to 330 V AC (Ph-N) 80 V to 570 V AC (Ph-Ph) up to 1M V AC (ext VT)	up to 277 V AC (Ph-N) / 480 V AC (Ph-Ph) depending on the reference
Current measurement	40 to 125 A direct	external CT (iEM3200), external LVCT(iEM3400/3500) direct 63 A (iEM3100), direct 125 A (iEM3300)	external CT	63 to 2000 A
Communication ports	RS-485, M-Bus in selected references	RS-485, M-Bus, BACnet, LonWorks in selected references	1	Wireless
Inputs / Outputs	1/1 (in selected)	up to 2 Inputs and 1 Output	2 I/O	
Memory capacity				
	page 47	page 52	page 58	page 64

Panorama of the PowerLogic™ range (cont'd)

Wireless products

Basic multi-function metering

Name	PowerTag Control	HeatTag Smart Sensor	PM5000 Series	PM5350 Series
Function	Circuit monitoring & control IEC 60364-8-1 EN 17267 ISO 50010	Early detection of overheating wire connections or overheating cables	metering & sub-metering IEC 62052-31:2015 BS/EN/IEC 62053-22:2020 ed 2 BS/EN/IEC 62053-23:2020 ed 2 EN 50470-1:2006 EN 50470-3:2006 IEC 61557-12:2018	Class 0.5S IEC 62053-22 Class 2 IEC 62053-23 Class 1 IEC 61557-12
Applications				
Panel instrumentation				
Panel instrumentation		**Analysis of gas and micro-particles, Temperature, Humidity**	**I, U, F, P, Q, S, PF, E (Power demand and current demand)**	**I, U, F, P, Q, S, PF, E (Power demand and current demand)**
Energy efficiency and cost				
Sub-billing & cost allocation			■	■
Demand & load management			■	■
Billing analysis			■	
Power availability & reliability				
Compliance monitoring			■	
Dip/swell, transient				
Harmonics			■	■
Residual current M			■	
Revenue metering				
Revenue meter				
Characteristics				
Measurement accuracy		Temperature ±-1.1 °C Humidity ± 9 RH%	Class 0.5S	Class 0.5
Installation	DIN rail	DIN rail 6 x 18 mm modules	Flush mount 96 mm x 96 mm or DIN rail (PM5563)	Flush mount 96 mm x 96 mm
Voltage measurement			20 V to 400 V AC L-N 35 V to 690 V AC L-L	20 V to 300 V L-N 35 V to 520 V L-L
Current measurement			external CT	external CT
Communication ports	Wireless		RS-485, Ethernet, BACnet, Ethernet IP	RS-485
Inputs / Outputs	2 I/O		up to 4 inputs/ 2 outputs	up to 4 inputs/ 2 outputs
Memory capacity			Available	
	page 107	page 111	page 115	page 128

Panorama of the PowerLogic™ range (cont'd)

Advanced metering

Name	PM8000 Series	ION9000
Function	Energy & Advanced Power Quality Meter IEC 62053-22 Class 0.2S ANSI C12.20 Class 0.2 IEC 61000-4-30 Class S IEC 62586-2 IEC 61557-12 PMD/Sx/K70/0.2 IEC / UL 61010-1	Energy & Advanced Power Quality Meter IEC62052-11 ed.2 Class 0.1S ANSI C12.20 Class 0.1 PQI Class A IEC 62586-1 / -2 IEC 61557-12 PMD/Sx/K70/0.2 IEC / UL 61010-1

Applications

Panel instrumentation		
Panel instrumentation	I, U, F, P, Q, S, PF, E, THD, Min/Max, harm, alarm, I/O (I, U unbalance, demand, clock/cal, dip/swell)	I, U, F, P, Q, S, PF, E, THD, Min/Max, harm, alarm, I/O (I, U unbalance, demand, clock/cal, dip/swell, transients, flicker, RVC, mains signaling, 1/2 cycle RMS)

Energy efficiency and cost		
Sub-billing and cost allocation		
Demand and load management		
Billing analysis		

Power availability & reliability		
Harmonics		
Dip/swell, transient	dip/swell only	
Compliance monitoring		

Revenue metering		
Revenue metering		

Characteristics

Measurement accuracy (active energy)	IEC 62053-22 Class 0.2S ANSI C12.20 Class 0.2	IEC62052-11 ed.2 Class 0.1S ANSI C12.20 Class 0.1
Installation	Flush & DIN 96 mm x 96 mm	Flush & DIN 160 mm x 160 mm Display 96 mm or 197 mm x 175 mm
Voltage measurement	57-400 V AC L-N 3P (100-690 V AC L-L)	57-400 V L-N AC or 100-690 V L-L AC
Current measurement	external CT	external CT and LVCT
Communication ports	3	4
Inputs / Outputs	up to 27 DI, 9 DO up to 16 AI, 8 AO	up to 32 DI, 4 DO, 10 RO (relay) up to 16 AI, 8 AO
Memory capacity	512 MB	2 GB
	page 136	page 146

Panorama of the PowerLogic™ range (cont'd)

Advanced utility metering

Name	ION7400	ION8650 A	B	C
Function	Energy & Advanced Power Quality Meter IEC 61557-12 IEC 62053-22 IEC 61000-4-30 Class S IEC 62586 ANSI C12.20 Class 0.2 PMD/Sx/K70/0.2	Energy & Advanced Power Quality Meter IEC 62052-11 IEC 62053-22/23 Class 0.2S IEC 61000-4-30 Class A		
Applications				
Panel instrumentation				
Panel instrumentation	I, U, F, P, Q, S, PF, E, THD, Min/Max, harm, alarm, I/O (I, U unbalance, demand, clock/cal)	I, U, F, P, Q, S, PF, E (demand, minimum and maximum values)		
Energy efficiency & cost				
Sub-billing and cost allocation				
Demand and load management				
Billing analysis				
Power availability & reliability				
Harmonics				
Dip/swell, transient	dip/swell only			
Compliance monitoring				
Revenue metering				
Revenue metering				
Characteristics				
Measurement accuracy (active energy)	IEC 61053-22 Class 0.2S ANSI 12.20 Class 0.2S	Class 0.2S		
Installation	Flush & DIN rail mount 96 mm x 96 mm	ANSI socket mount 9S, 35S, 36S, 39S and 76S; FT21 switchboard case		
Voltage measurement	57-400 V AC L-N 3P (100-690 V AC L-L)	57-277 V L-N AC (9S, 36S); 120-480 V L-L AC (35S)		
Current measurement	external CT	external CT		
Communication ports	3	5		
Inputs / Outputs	up to 27 DI, 9 DO up to 16 AI, 8 AO	up to 22 I/O		
Memory capacity	512 MB	10 MB	4 MB	2 MB
	page 159	page 169		

Panorama of the PowerLogic™ range (cont'd)

Multi-circuit metering

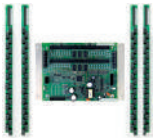

Name	HDPM6000	BCPM	EM4000	EM4800
Function	3-phase power quality meter; branch-circuit accessory module hub	branch circuit monitor IEC 61036 Class 1	multi-circuit energy meter Class 0.5 ANSI C12.1, C12.20 Class 0.5S IEC 62053-22	multi-circuit energy meter Class 0.5 ANSI C12.1, C12.20 Class 0.5S IEC 62053-22
Applications				
Panel instrumentation				
Panel instrumentation		I, U, F, P, Q, S, PF, E (Power demand and current demand)	I, U, F, P, Q, S, PF, E (Power demand and current demand)	I, U, F, P, Q, S, PF, E (Power demand and current demand)
Energy efficiency and cost				
Sub-billing and cost allocation				
Demand and load management				
Billing analysis				
Power availability and reliability				
Compliance monitoring				
Sag/swell, transient				
Harmonics				
Revenue metering				
Revenue meter				
Characteristics				
Measurement accuracy		Class 1 (mains active energy)	Class 0.5S	Class 0.5S
Installation		Panel or enclosure	Panel or enclosure	Panel or enclosure
Voltage measurement		90 – 277 V L-N voltage Inputs	80 - 480 V AC L-L without PTs, Up to 999 kV with external PTs	80 - 480 V AC L-L without PTs, Up to 999 kV with external PTs
Current measurement		CT strips for branch circuits and external CTs for mains	Split- or solid-core CTs	Split- or solid-core CTs
Communication ports		1 for main	2	2
Inputs / Outputs			2	2
Memory capacity				
	page 180	page 192	page 206	page 215

Panorama of the PowerLogic™ range (cont'd)

	Multi-circuit metering	Retrofit products	
Name	**EM4900**	**EM3500**	**EM4200**
Function	multi-circuit energy meter Class 0.5 ANSI C12.1, C12.20 Class 0.5S IEC 62	DIN rail power & energy meter ANSI 12.20 0.2% accuracy, IEC 62053-22 Class 0.2S for EM35xx models, ANSI C12.20 0.5% accuracy, IEC 62053-22 Class 0.2S for EM35xxA models	power & energy meter ANSI C12.20 0.2% IEC 62053-22 Class 0.2S
Applications			
Panel instrumentation			
Panel instrumentation	**I, U, F, P, Q, S, PF, E (Power demand and current demand)**	**I, U, F, P, Q, S, PF, E (Power demand and current demand)**	**I, U, F, P, Q, S, PF, E (Power demand and current demand)**
Energy efficiency and cost			
Sub-billing and cost allocation			
Demand and load management			
Billing analysis			
Power availability and reliability			
Compliance monitoring			
Sag/swell, transient			
Harmonics			
Revenue metering			
Revenue meter			
Characteristics			
Measurement accuracy	Class 0.5S	Class 1 (mains active energy)	ANSI C12.20 Class 0.2S IEC 62053-22 Class 0.2S
Installation	Panel or enclosure	Panel or enclosure	DIN or screw, clip-on or hook
Voltage measurement	150 – 480 V AC L-L without PTs Up to 999 kV with external PTs	UL: 90 V L-N to 600 V L-L; CE: 90 V L-N to 300 V L	890 - 480 V AC L-L
Current measurement	Split- or solid-core CTs	EM35xxA models work exclusively with Rogowski coil CTs.	5 A to 5000 A
Communication ports	2	1 for main	2
Inputs/Outputs	2	(see Datasheet)	
Memory capacity			
	page 220	**page 230**	**page 236**

Panorama of the PowerLogic™ range (cont'd)

	Insulation monitoring Devices	EcoStruxure™ Panel Server
Name	**Vigilohm™ Insulation monitoring devices**	**EcoStruxure™ Panel Server**
Function	Insulation monitoring for IT / Ungrounded networks	IoT gateway for intelligent power network
Features		
RS-485 / Ethernet gateway	RS-485	Supports IEEE 802.15.4 and Modbus devices
Devices supported	Insulation Monitors: IM9, IM9-OL, IM10, IM20 IM10-H, IM20-H, IM400 series IM400THR Insulation Fault Locators: IFL 12, IFL 12C, IFL 12MC, IFL 12H Accessories: Including voltage adaptors, cardews, toroids	Wired devices communicating though Modbus-SL, Modbus TCP/IP, or digital inputs: Circuit breakers and switch-disconnectors, Protection relays, Power meters, Energy meters, Pulse meters, IO modules, Gateways Wireless devices: PowerTag Energy sensors, Environmental sensors, Acti9 Active, HeatTage sensors, PowerTag Control modules, Wireless indication auxiliaries for ComPacT NSX and ComPacT NSXm, circuit breakers
Web server with standard HTML pages		
Web server with custom HTML pages		
Real time data	Available on product supervision e.g.PME, Com'X 510	Available on web server embedded in Panel Server
Historical data	Available on product supervision e.g.PME, Com'X 510	Available on web server embedded in Panel Server (Advanced Panel Server only)
Automatic notification	Available in supervision PME	Available on embedded web server (Advanced Panel Server only), edge control system & cloud-hosted application
Alarm and event logs	Available in supervision PME	Available on embedded web server (Advanced Panel Server only), edge control system & cloud-hosted application
Waveform display		
Custom animated graphics		
Manual/automatic reports		
Characteristics		
Ethernet ports Modbus TCP/IP protocol	An IT earthing system -also called ungrounded system- allows the network to operate even in the presence of an insulation fault, without endangering people or property. Required as part of the IT network, an Insulation Monitoring Device (IMD) detects the insulation fault and locates it so it can be repaired.	Two Ethernet 10Base-T/100Base-T port Wi-Fi Bluetooth communication for commissioning Modbus RS485 serial communication IEEE 802.15.4 wireless communication Modbus TCP/IP server and client Support of HTTPS, NTP, SNTP, DHCP client and server with proxy management Modbus RS485 to Modbus/TCP Gateway Wireless devices concentrator to Modbus/TCP Two digital inputs (24VDC version only) Commissioning through EcoStruxure™ Power Commission or through Embedded Web-Pages
RS-485 (2-wire / 4-wire) ports, Modbus protocol		
Number of devices connected directly		
RS-232 configuration ports		
Miscellaneous		
Installation		
	page 242	page 249

PowerLogic™ Current Transformers (CT)

IEC certified Solid core and Split core types

Schneider Electric is the global specialist in energy management with the most complete power monitoring product line. Current Transformers are essential components designed to be used with Schneider Electric's extensive power monitoring product portfolio. From simple energy meters to world class power quality meters, these proven products satisfy any requirement.

Solid core CTs

PB112446

METSECT5CCxxx

PB112460

METSECT5MAxxx

PB112456

METSECT5DCxxx

PB112467

METSECT5VVxxx

Split core CTs

PB119872

METSECT5HAxxx

PB119862

METSECT5GAxxx

PB119868

METSECT5GJxxx

PB119876

METSECT5HJxxx

Solid Core CTs

These current transformers from Schneider Electric are a comprehensive offer, ideally suited throughout the entire low voltage network, from 40 A to 6000 A. They deliver secondary current (0-5 A) proportional to the current measured at the primary. They can be used in combination with measurement devices (switchboard instrumentation, Ammeters, kilowatt-hour meters, power-monitoring units, control relays etc.). CTs with low VA burden allows them to be used in combination of measurement equipments.

The solution for

- Perfect for new and existing installations and expansion projects in a variety of markets:
- Commercial buildings
- Industrial facilities
- Medical facilities
- Data centers
- Education
- Oil & Gas

Benefits

- Safety: sealable insulating cover
- Installation: on symmetrical DIN rail, on mounting plate, on busbar
- Well adapted CT as the accuracy class is better than rated accuracy
- Multiple secondary terminal options for different mounting profile
- Current Transformers for coaxial cable
- Current Transformers for vertical or horizontal bar
- Current Transformers for cable or bar profile
- Compact size suitable for different sizes of conductors
- Tropicalized rating for harsh environmental condition
- Adaptable for different conductor profile and primary current intensity

Features

- A broad selection of ratings: from 40 A to 6000 A Ip with 120% max. range
- Fully compatible with Schneider Electric's complete portfolio of industry leading metering products as well as Third Party measurement devices.
- Safety through sealable insulating cover
- Compliance with IEC measurement standards with accuracy class ranges from Class 0.5 to Class 3
- Higher safety factor during installation and for facility
- For indoor use

Conformity of standards

- BS / EN 61869-1:2009
- BS / EN 61869-2:2012
- BS / EN 63000:2018
- VDE 0414
- Green Premium Ecolabel
- CE / UKCA certified
- EAC, Metrology

Ip/5 A ratio

When the primary is energized, the measurement equipment nearly acts as a short circuit which keeps the secondary voltage very low. This voltage will increases significantly if the short circuit is removed. Hence, always keep the secondary circuit connected to low impedance path or current signal terminals of the measuring instrument.

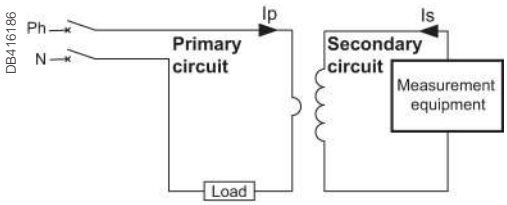

Application diagram of a CT.

Ip - Primary Current

CTs with multi secondary output

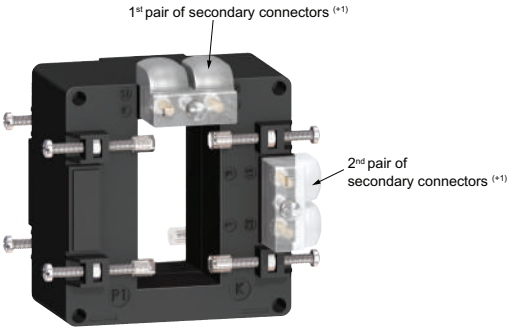

(+1) Two pairs of secondary connectors are provided (parallel internal wiring - only one secondary winding) for easier cable access. 1 lateral + 1 on one extremity.

Hence, only one pair of secondary connectors must be used at a time.

Solid Core CTs

CT selection - conductor rating aspects

- The choice depends on the conductor profile and the maximum intensity of the primary circuit.
- CTs are available in different form factors and sizes to meet varied applications

Primary current can be measured in two ways:

- CT with let-through primary
- CT with connection of primary by screws and nuts

CT with let-through primary

Conductor type	Cable	Mixed, bars or cables	Vertical or horizontal bars	Vertical bars
Suggested Current Transformer and mounting	DB415986 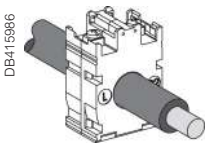	DB415920 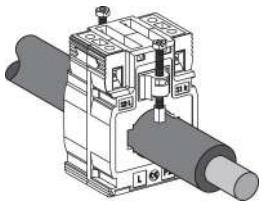 DB415921 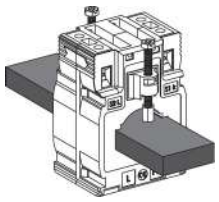	DB415988 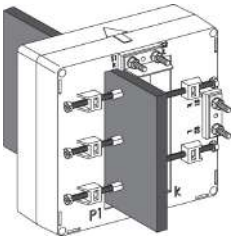 DB415987 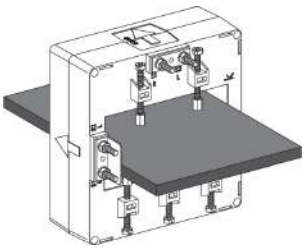	DB415989 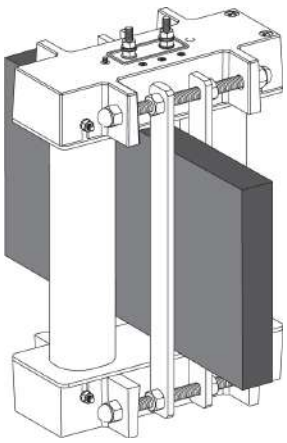
Ratings (A)	40 to 250	150 to 800	200 to 4000	5000 to 6000
CT internal	Type C	Type M	Type D (+1)	Type V
	FF C	FF MA FF MD	FF D 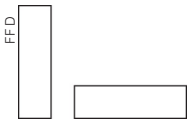	FF V2 VV

(+1) Two pairs of secondary connectors are provided (parallel internal wiring - only one secondary winding) for easier cable access. 1 lateral + 1 on one extremity. Hence, only one pair of secondary connectors must be used at a time.

Mounting method

CT Mounting

DB415926

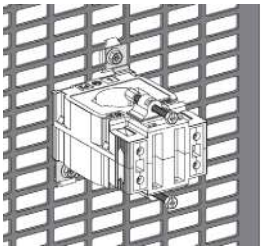

Panel mounting

DB415927

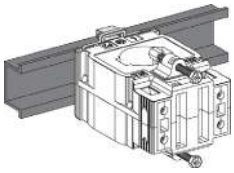

DIN rail mounting

Specific mounting: use of cylinder

A cylindrical metallic spacer ensures a proper CT positioning when the conductor or the CT cannot be positioned perpendicular. Secured by bolt + nut.

CT with primary connection by screw and nut
(example: use of cylinder with bar or cable)

DB416005

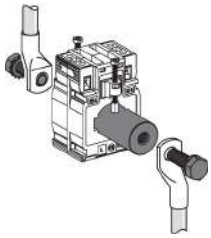

METSECT5CYL1 (aluminium)

DB416006

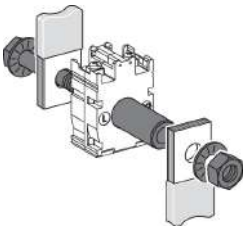

16550 (brass)

NOTE: This document is not intended to be used as an installation guide.

CT selection criterion - Electrical aspect of I primary (Ip)/5 A

- **We recommend that you choose the ratio immediately higher than the maximum load current.**
  Example: Maximum load current = 1103 A; ratio chosen = 1250/5 (Ip = 1250 or Inom = 1250).
- **For lower ratings:** From 40/5 to 75/5 and for an application with digital devices, we recommend that you choose the next higher rating of Ip, for example 50/5 for 40/5, 60/5 for 50/5, and so on.
- **Specific case of the motor starter:** to measure motor starter current, you must choose a CT with primary current Ip = Id/2 (Id = motor starting current).

Validation of measurement solution according to accuracy class

It consists in controlling the right adaptation of the CT on the accuracy class aspect. The accuracy class is specified in the project. The total dissipated power of the measurement circuit (meter + cables) should not be superior to the specified limit of the CT. This limit is for different standard classes. If necessary, the choice of the cable section, the CT or meter should be modified to fit the requirement.

Copper cable cross-section (mm²)	Approximate Power burden at 20 °C (VA)
1	1
1.5	0.685
2.5	0.41
4	0.254
6	0.169
10	0.0975
16	0.062

For each temperature variation per 10 °C bracket, the power drawn up by the cables increases by 4 %.

Schneider Electric make power monitoring device	Maximum VA burden at Nominal current (secondary) input (VA)
Analog Ammeter, form factor 72 x 72 mm / 96 x 96 mm	1.1
Digital ammeter	0.3
PM8000	0.15
PM3000 / iEM3200	0.3
PM5000 / PM2000	0.15
PM / EM1000H / EM64xxH	0.15

Application example

Project specification: **200 A**, in **Ø27** mm cable, accuracy class 1.
Our choice is METSECT5MA020.

For this CT selected on the chart (next page), the maximum VA burden is **7 VA** (for "Accuracy class 1" which is specified in the project).

Internal profile type	Cables (mm)	Bars (mm)	Rating Ip/5 A (A)	Commercial reference number	Accuracy class 0.5	1	3
					Max. power (VA)		
MA							
FF ME	Ø27	10 x 32	150	METSECT5MA015	3	4	-
		15 x 25	200	METSECT5MA020	4	7	-
			250	METSECT5MA025	6	8	-
			300	METSECT5MA030	8	10	-
			400	METSECT5MA040	10	12	-

Control of the conformity of the measurement chain:
- PM3000 multi-meter: 0.3 VA.
- 4 m length of 2.5 mm² cable: 0.41 x 4 = 1.64 VA.

Calculated burden: 0.3 + 1.64 = 1.94 VA (< 7 VA)

Conclusion: this CT is well adapted as the accuracy class will be even better than 1.

Typical limits of current error and phase displacement error for measuring current transformers (classes from 0.1 to 1)

Accuracy Class	± Percentage current (ratio) error at percentage of rated current shown below				± Phase displacement at percentage of rated current as shown below							
					Minutes				Centiradians			
	5	20	100	120	5	20	100	120	5	20	100	120
0.1	0.4	0.2	0.1	0.1	15	8	5	5	0.45	0.24	0.15	0.15
0.2	0.75	0.35	0.2	0.2	30	15	10	10	0.9	0.45	0.3	0.3
0.5	1.5	0.75	0.5	0.5	90	45	30	30	2.7	1.35	0.9	0.9
1.0	3.0	1.5	1.0	1.0	180	90	60	60	5.4	2.7	1.8	1.8

Solid Core CTs

Type C

PB112446

METSECT5CCxxx

Type V

PB112467

METSECT5VVxxx

Type M

PB112461

METSECT5MBxxx

PB112460

METSECT5MAxxx

PB112462

METSECT5MCxxx

PB112463

METSECT5MDxxx

General characteristics

Secondary current Is (A)	5 A (S1- S2 terminals, multiple secondary terminal options for different mounting profile)
Maximum voltage rating Ue (V)	720 V
Dielectric strength test	3 kV, 50 Hz for one minute
Frequency (Hz)	50/60 Hz nominal (47 - 63 Hz)
Instrument security/ safety factor (FS/sf)	40 to 4000 A: FS ≤ 5 5000 to 6000 A: FS ≤ 10
Rated short time thermal current (I*th*)	60 times the Ip current for 1 s (max 60 kA)
Rated dynamic current (I*dyn*)	2.5 I*th*
Degree of protection	IP20
Operating temperature	Tropicalised range: -25 to 60 °C (for Ip up to 1000 A), -25 to 50 °C (for Ip 1250 A up to 6000A) Relative humidity - 5 % to 95 %
Storage temperature	-40°C to +85°C
Compliance with standards	BS / EN 61869-1:2009, BS / EN 61869-2:2012, BS / EN 63000:2018 VDE 0414
Secondary connection (as per model)	by terminals for lug or by tunnel terminals or by screws
Pollution degree	2
Installation category	III
Insulation class	B
Altitude	≤ 3000 m (9843 ft)

Type D

PB112454

METSECT5DAxxx

PB112457

METSECT5DDxxx

PB112455

METSECT5DBxxx

PB112456

METSECT5DCxxx

PB112458

METSECT5DExxx

PB112459

METSECT5DHxxx

Solid Core CTs

Representation of commercial reference numbers for CTs

MET SE CT X XX XXX

- X: 1 = 1 Amp; 5 = 5 Amp; R = Rogowski
- XX: 2 letters = Form Factor
- XXX: Last 3 digits = Primary rating/10 (Rounded off to next digit)

Examples:

Solid core
METSECT5CC008
CT - Current transformer
5 - 5 A CT secondary
CC - Form factor suitable for Coaxial cable (round) only
008 - 75 A primary rating, divide by 10

Split core
METSECT5GA020
CT - Current transformer
5 - 5 A CT secondary
GA - Form factor suitable for bus bars of max. size 23 x 33 mm
020 - 200 A primary rating, divide by 10

Rogowski coil
METSECTR30500
CT - Current transformer
R - Rogowski coil
30 - 300 mm coil length
500 - Primary current 5000 A, multiply by 10

Commercial reference scheme

CT with let-through primary	CT internal type	Internal profile type and dimension in mm	Fastening mode	Ip/5 A rating (A)(+1)	Accuracy class VA rating 0.5	1	3	CT Commercial reference	Accessories commercial reference: Cylinder	Sealable cover
Type C - solid-core CT (cable profile)										
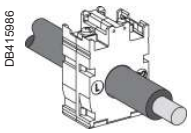 DB415986	CC	FF CC Ø21	• Adapter for DIN rails • Mounting plate	40	-	-	1	METSECT5CC004	METSECT5CYL1	Included
				50	-	1.25	1.5	METSECT5CC005		
				60	-	1.25	2	METSECT5CC006		
				75	-	1.5	2.5	METSECT5CC008		
				100	2	2.5	3.5	METSECT5CC010		
				125	2.5	3.5	4	METSECT5CC013		
				150	3	4	5	METSECT5CC015		
				200	4	5.5	6	METSECT5CC020		
				250	5	6	7	METSECT5CC025		
Type M - solid-core CT (mixed: cable/bar profile)										
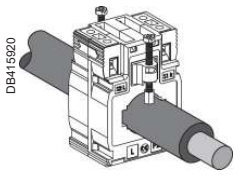 DB415920	MB	FF MB Ø26 12 x 40 15 x 32	• Adapter for DIN rails • Mounting plate	250	3	4	-	METSECT5MB025	-	METSECT5COVER
				300	4	6	-	METSECT5MB030		
				400	6	8	-	METSECT5MB040		
	MA	FF MA Ø27 10 x 32 15 x 25		150	3	5	-	METSECT5MA015	METSECT5CYL2	METSECT5COVER
				200	4	7	-	METSECT5MA020		
				250	6	8	-	METSECT5MA025		
				300	8	10	-	METSECT5MA030		
				400	10	12	-	METSECT5MA040		
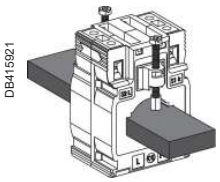 DB415921	MC	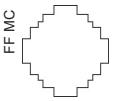 FF MC Ø32 10 x 40 20 x 32 25 x 25		250	3	5	-	METSECT5MC025	-	METSECT5COVER
				300	5	8	-	METSECT5MC030		
				400	8	10	-	METSECT5MC040		
				500	10	12	-	METSECT5MC050		
				600	12	15	-	METSECT5MC060		
				800	10	12	-	METSECT5MC080		
	MD	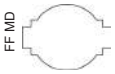 FF MD Ø40 10 x 50 20 x 40		500	4	6	-	METSECT5MD050	-	METSECT5COVER
				600	6	8	-	METSECT5MD060		
				800	10	12	-	METSECT5MD080		

(+1) Maximum rated current (Imax) is 120% of the primary current (Ip).

Please contact your Schneider Electric representative for complete ordering information.

Solid Core CTs

Commercial reference scheme (contd.)

CT with let-through primary	CT internal type	Internal profile type and dimension in mm	Fastening mode	Ip/5 A rating (A)(+1)	Accuracy class VA rating			CT Commercial reference	Accessories commercial reference	
					0.5	1	3		Cylinder	Sealable cover
Type D(+2) - solid-core CT (vertical or horizontal bar - dual secondary terminals)										
DB415988 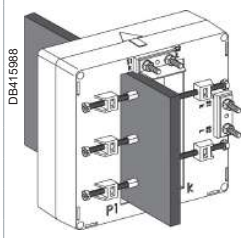	DA	FF D 32 x 65	Insulated locking screw	400	4	8	-	METSECT5DA040	-	Included
				500	8	10	-	METSECT5DA050		
				600	8	12	-	METSECT5DA060		
				800	12	15	-	METSECT5DA080		
				1000	15	20	-	METSECT5DA100		
				1250	15	20	-	METSECT5DA125(+3)		
				1500	20	25	-	METSECT5DA150(+3)		
	DB	FF D 38 x 127	Insulated locking screw	1000	6	10	-	METSECT5DB100	-	Included
				1250	8	12	-	METSECT5DB125(+3)		
				1500	10	15	-	METSECT5DB150(+3)		
				2000	15	20	-	METSECT5DB200(+3)		
				2500	20	25	-	METSECT5DB250(+3)		
				3000	25	30	-	METSECT5DB300(+3)		
DB415987 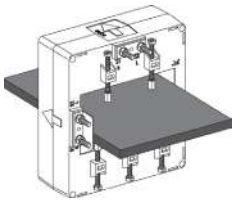	DC	FF D 52 x 127	Insulated locking screw	2000	25	30	-	METSECT5DC200(+3)	-	Included
				2500	30	50	-	METSECT5DC250(+3)		
				3000	30	50	-	METSECT5DC300(+3)		
				4000	30	50	-	METSECT5DC400(+3)		
	DD	FF D 34 x 84	Insulated locking screw	1000	10	15	-	METSECT5DD100	-	Included
				1250	12	15	-	METSECT5DD125(+3)		
				1500	15	20	-	METSECT5DD150(+3)		
	DE	FF D 54 x 102	Insulated locking screw	1000	12	15	-	METSECT5DE100	-	Included
				1250	15	20	-	METSECT5DE125(+3)		
				1500	20	25	-	METSECT5DE150(+3)		
				2000	20	25	-	METSECT5DE200(+3)		
	DH	FF D 38 x 102	Insulated locking screw	1250	12	15	-	METSECT5DH125(+3)	-	Included
				1500	12	15	-	METSECT5DH150(+3)		
				2000	20	25	-	METSECT5DH200(+3)		
Type V - solid-core CT (vertical bar profile)										
DB415989 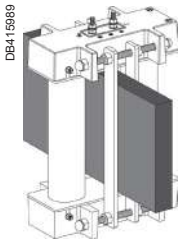	VV	FF V2 55 x 165	Insulated locking screw	5000	60	-	-	METSECT5VV500(+3)	-	Included
				6000	70	-	-	METSECT5VV600(+3)		

(+1) Maximum rated current (Imax) is 120% of the primary current (Ip).
(+2) Two pairs of secondary connectors are provided (parallel internal wiring - only one secondary winding) for easier cable access. One lateral and one on extremity. Hence, only one pair of secondary connector must be used at a time.
(+3) Operating temperature: -25 to +50 °C (-13 to +122 °F)

Please contact your Schneider Electric representative for complete ordering information.

Solid core CT dimensions

CC internal profile type

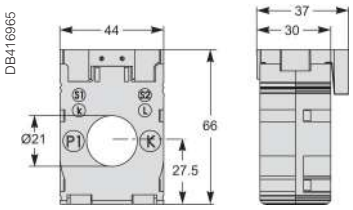

MB internal profile type

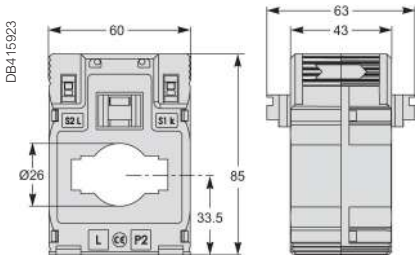

MA internal profile type

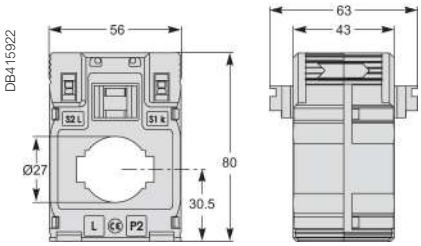

MC internal profile type

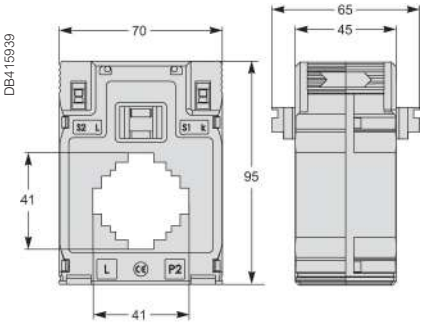

MD internal profile type

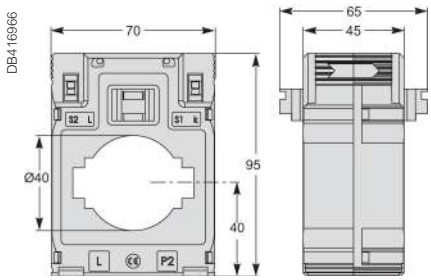

DA internal profile type

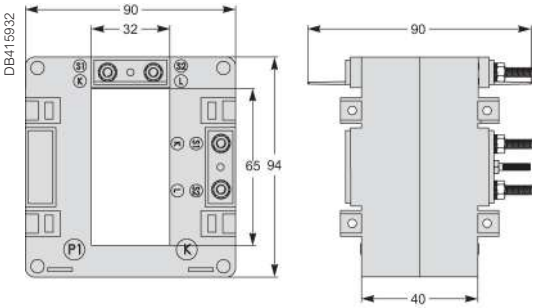

DB internal profile type

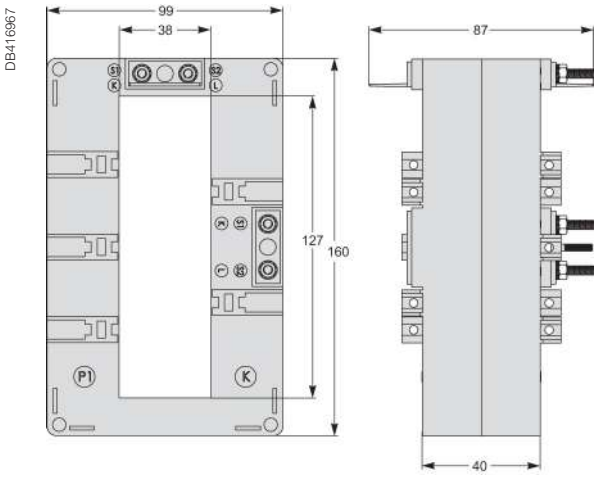

DC internal profile type

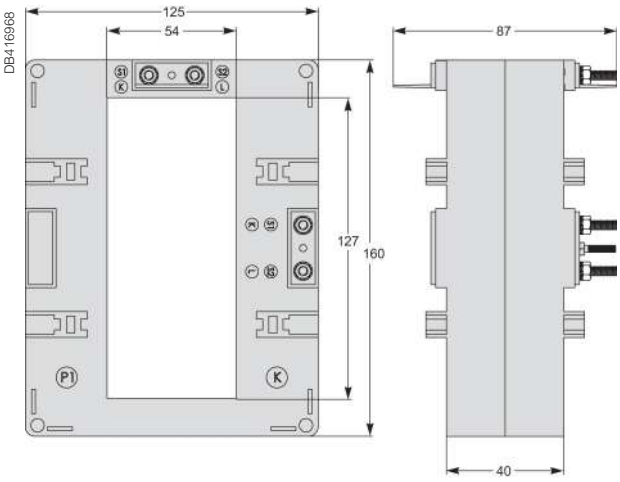

Solid core CT dimensions contd.

DD internal profile type

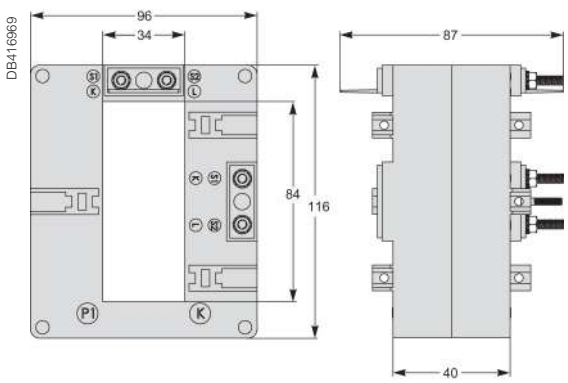

DE internal profile type

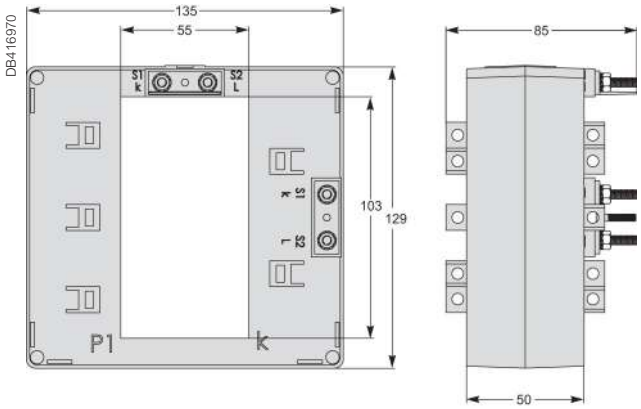

DH internal profile type

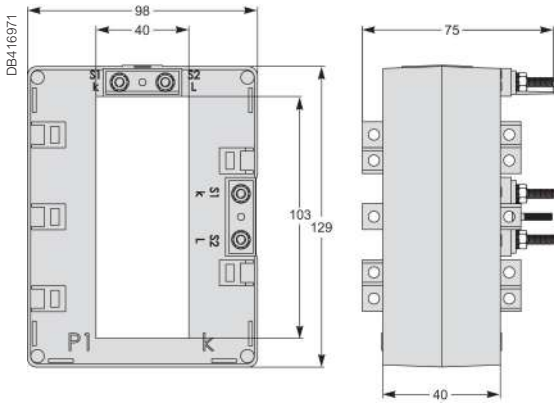

VV internal profile type

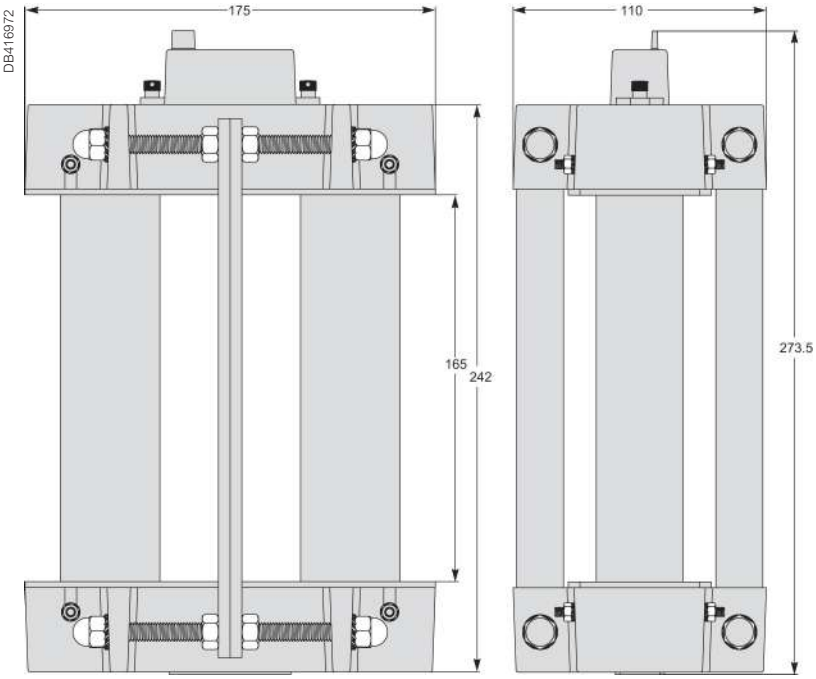

Solid core cylinders dimensions

Cylinders

METSECT5CYL1

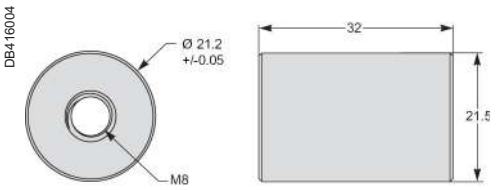

Aluminium

METSECT5CYL2

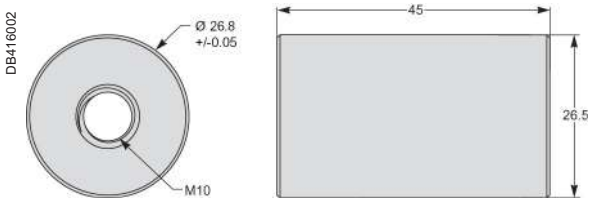

Aluminium

16550

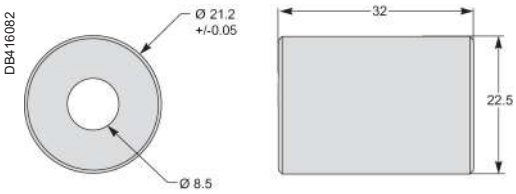

Brass

16551

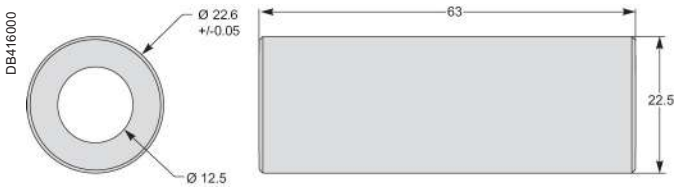

Brass

Covers

METSECT5COVER

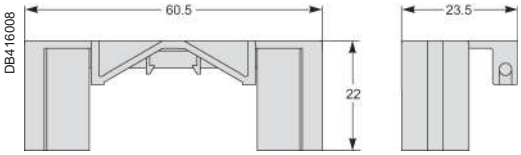

See the appropriate **Installation Guide** for correct installation instructions.

Split core CTs

These current transformers from Schneider Electric are a comprehensive offer, ideally suited throughout the entire low voltage network, from 100 A to 4000 A. They deliver secondary current (0-5 A) proportional to the current measured at the primary. They can be used in combination with measurement devices (switchboard instrumentation, Ammeters, kilowatt-hour meters, power-monitoring units, control relays etc.). CTs with low VA burden allows them to be used in combination of measurement equipments.

The solution for

- Perfect for new and existing installations and expansion projects in a variety of markets:
- Commercial buildings
- Industrial facilities
- Medical facilities
- Data centers
- Education
- Oil & Gas

Benefits

- Installation: on symmetrical DIN rail, on mounting plate, on busbar
- Well adapted CT as the accuracy class is better than rated accuracy
- Current Transformers for coaxial cable (input range 100 A to 1000 A)
- Current Transformers for bus bar (input range 100 A to 4000 A)
- Current Transformers for cable or bar profile
- Compact size suitable for different sizes of conductors
- Tropicalized rating for harsh environmental condition
- Adaptable for different conductor profile and primary current intensity

Ip/5 A ratio

When the primary is energized, the measurement equipment nearly acts as a short circuit which keeps the secondary voltage very low. This voltage will increases significantly if the short circuit is removed. Hence, always keep the secondary circuit connected to low impedance path or current signal terminals of the measuring instrument.

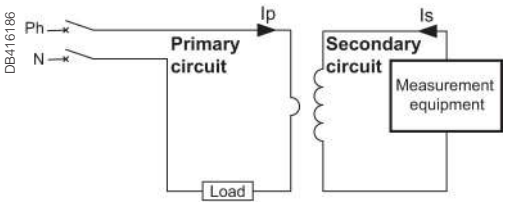

Application diagram of a CT.

Ip - Primary Current

Features

- A broad selection of ratings: from 100 A to 4000 A Ip with 120% max. range
- Split core design allows for CT installation without the need to uninstall and reinstall power conductor
- The split core CTs are designed for easy fit and assembly into existing installations, without separating the primary conductor.
- Click-system and fixing clasps allow single-handed mounting
- Fully compatible with Schneider Electric's complete portfolio of industry leading metering products as well as Third Party measurement devices.
- Safety through sealable insulating cover
- Compliance with IEC measurement standards with accuracy class ranges from Class 0.5 to Class 3
- Higher safety factor during installation and for facility
- For indoor use

Conformity of standards

- BS / EN 61869-1:2009
- BS / EN 61869-2:2012
- BS / EN 63000:2018
- VDE 0414
- Green Premium Ecolabel
- CE / UKCA certified
- EAC, Metrology

Split Core CTs

Mounting method

CT Mounting

DB445254

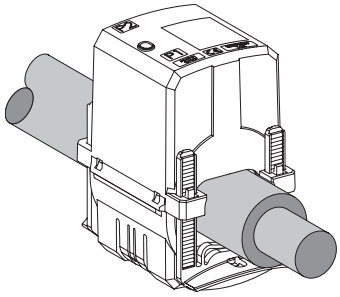

Type H

DB445255

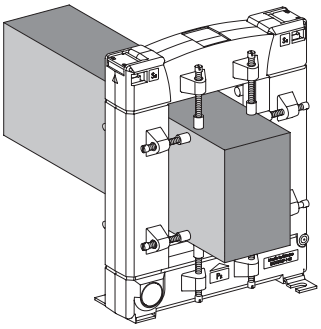

Type G

General characteristics

Secondary current I*s* (A)	5 A (S1- S2 terminals)
Maximum voltage rating U*e* (V)	720 V
Dielectric strength test	3 kV, 50 Hz for one minute
Frequency (Hz)	50/60 Hz nominal (47 - 63 Hz)
Instrument security/ safety factor (FS/sf)	up to 1000 A: FS ≤ 5 ≥1000 A: FS ≤ 10
Rated short time thermal current (I*th*)	60 times the Ip current for 1 s (max 60 kA)
Rated dynamic current (I*dyn*)	2.5 I*th*
Degree of protection	IP20
Operating temperature	Tropicalised range: -5 to +60 °C Relative humidity: 5 % to 85 %
Storage temperature	-25°C to +70°C
Compliance with standards	BS / EN 61869-1:2009, BS / EN 61869-2:2012, BS / EN 63000:2018 VDE 0414
Secondary connection (as per model)	by terminals for lug or by tunnel terminals or by screws
Pollution degree	2
Installation category	III
Insulation class	E
Altitude	≤ 3000 m (9843 ft)

Type H

PB119872

METSECT5HAxxx

PB119872

METSECT5HDxxx

PB119874

METSECT5HGxxx

PB119876

METSECT5HJxxx

PB119878

METSECT5HMxxx

PB119874

METSECT5HPxxx

Split Core CTs

Type G

PB119862

METSECT5GAxxx

PB119864

METSECT5GDxxx

PB119866

METSECT5GGxxx

PB119868

METSECT5GJxxx

Commercial reference scheme

CT with let-through primary	CT internal type	Internal profile type and dimension in mm	Ip/5 A rating (A)(+1)	Accuracy class VA rating			CT Commercial reference
				0.5	1	3	
Type G - split core CT (bus bar)							
PB119862	GA	FF V2 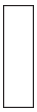 23 x 33	100	-	-	1.25	METSECT5GA010
			150	-	-	1.5	METSECT5GA015
			200	-	-	2.5	METSECT5GA020
			250	-	1.5	-	METSECT5GA025
			300	-	3.75	-	METSECT5GA030
			400	1	-	-	METSECT5GA040
PB119864	GD	FF V2 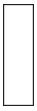 55 x 85	250	-	1.5	-	METSECT5GD025
			300	-	2.5	-	METSECT5GD030
			400	1	-	-	METSECT5GD040
			500	2.5	-	-	METSECT5GD050
			600	2.5	-	-	METSECT5GD060
			750	2.5	-	-	METSECT5GD075
			800	2.5	-	-	METSECT5GD080
			1000	5	-	-	METSECT5GD100
PB119866	GG	FF V2 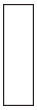 85 x 125	250	-	1.5	-	METSECT5GG025
			300	-	2.5	-	METSECT5GG030
			400	-	2.5	-	METSECT5GG040
			500	2.5	-	-	METSECT5GG050
			600	2.5	-	-	METSECT5GG060
			750	2.5	-	-	METSECT5GG075
			800	2.5	-	-	METSECT5GG080
			1000	5	-	-	METSECT5GG100
			1200	5	-	-	METSECT5GG120
			1250	7.5	-	-	METSECT5GG125
			1500	7.5	-	-	METSECT5GG150
PB119868	GJ	FF V2 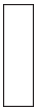 85 x 165	1000	10	-	-	METSECT5GJ100
			1200	10	-	-	METSECT5GJ120
			1500	10	-	-	METSECT5GJ150
			1600	10	-	-	METSECT5GJ160
			2000	10	-	-	METSECT5GJ200
			2500	10	-	-	METSECT5GJ250
			3000	15	-	-	METSECT5GJ300
			4000	15	-	-	METSECT5GJ400

(+1) Maximum rated current (Imax) is 120% of the primary current (Ip).

Split Core CTs

Commercial reference scheme (contd.)

CT with let-through primary	CT internal type	Internal profile type and dimension in mm	Ip/5 A rating (A)(*1)	Accuracy class VA rating			CT Commercial reference
				0.5	1	3	
Type H - split core CT (cable)							
PB119872	HA	18.4 x 19	150	-	1	-	METSECT5HA015
			200	-	1.5	-	METSECT5HA020
			250	1	-	-	METSECT5HA025
	HD	27.9 x 27	250	-	1	-	METSECT5HD025
			300	-	1.5	-	METSECT5HD030
			400	-	2.5	-	METSECT5HD040
			500	1	-	-	METSECT5HD050
PB119874	HG	Ø32.5	100	-	-	1.5	METSECT5HG010
			125	-	-	2.5	METSECT5HG013
			150	-	-	3	METSECT5HG015
			200	-	-	3	METSECT5HG020
			250	-	-	3	METSECT5HG025
			300	-	2.5	-	METSECT5HG030
			400	-	5	-	METSECT5HG040
			500	-	5	-	METSECT5HG050
			600	-	5	-	METSECT5HG060
PB119876	HJ	42.4 x 43	300	-	2.5	-	METSECT5HJ030
			400	-	5	-	METSECT5HJ040
			500	-	5	-	METSECT5HJ050
			600	2.5	-	-	METSECT5HJ060
			750	2.5	-	-	METSECT5HJ075
			800	2.5	-	-	METSECT5HJ080
PB119878	HM	42.4 x 85	300	-	2.5	-	METSECT5HM030
			400	-	5	-	METSECT5HM040
			500	-	5	-	METSECT5HM050
			600	2.5	-	-	METSECT5HM060
			750	2.5	-	-	METSECT5HM075
			800	2.5	-	-	METSECT5HM080
PB119874	HP	Ø44	250	-	1.5	-	METSECT5HP025
			300	-	2.5	-	METSECT5HP030
			400	-	5	-	METSECT5HP040
			500	-	5	-	METSECT5HP050
			600	-	5	-	METSECT5HP060
			750	-	5	-	METSECT5HP075
			800	-	5	-	METSECT5HP080
			1000	-	5	-	METSECT5HP100

* Maximum rated current (Imax) is 120% of the primary current (Ip).

Please contact your Schneider Electric representative for complete ordering information.

Split core CT dimensions

Gx products

GA Dimensions

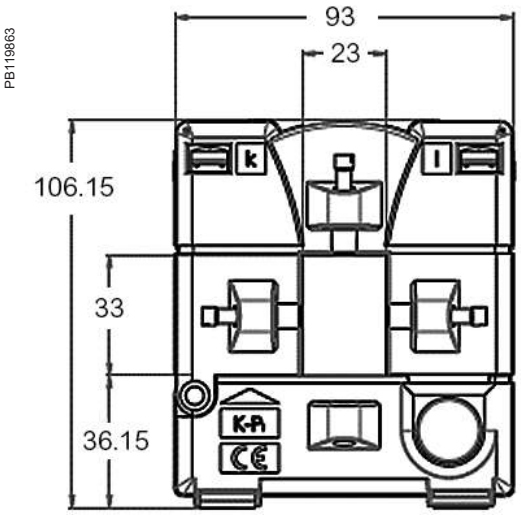

GD Dimensions

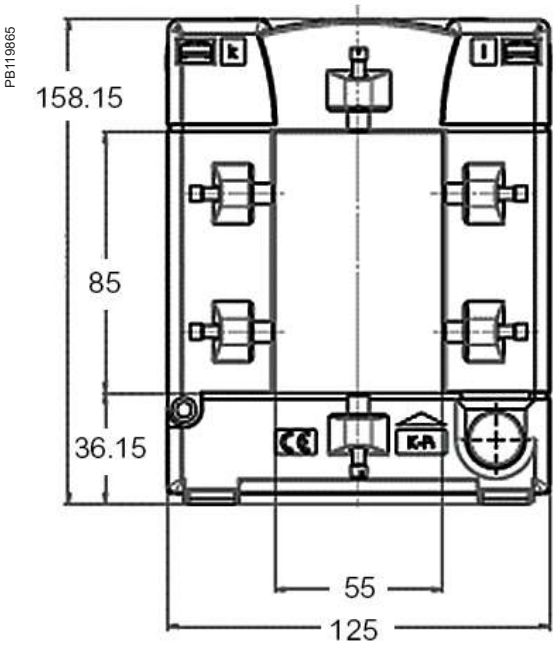

GG Dimensions

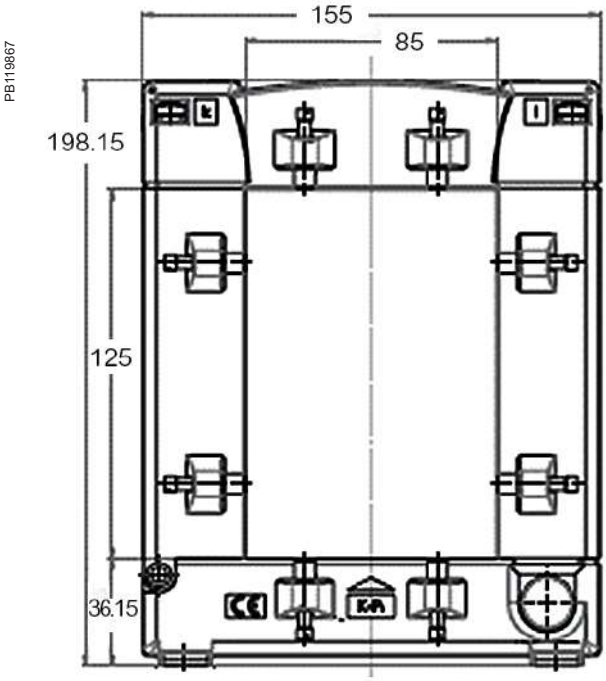

GJ Dimensions

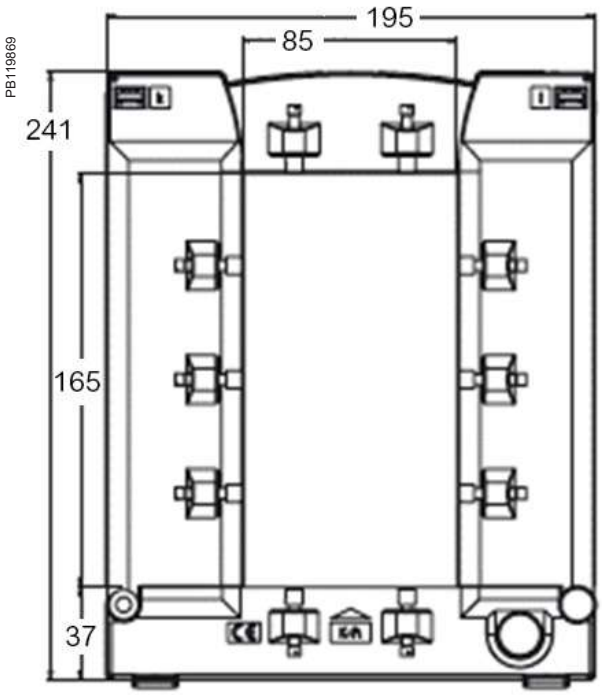

Split core CT dimensions (contd.)

Hx products

HA Dimensions

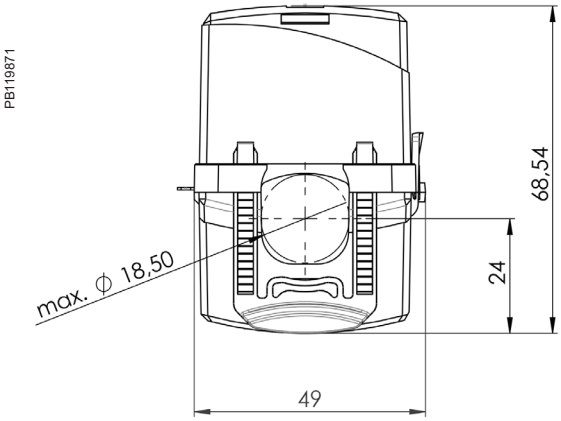

HD Dimensions

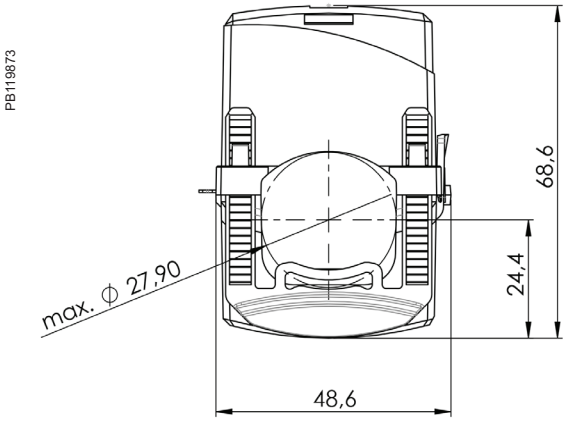

HG Dimensions

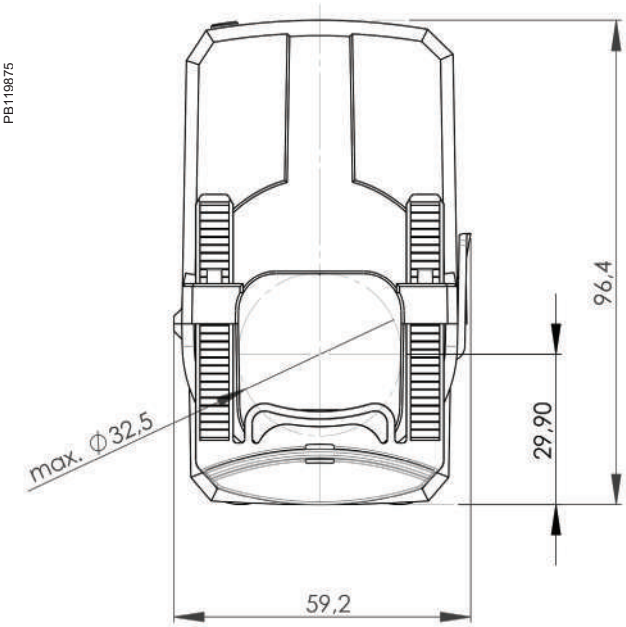

HJ Dimensions

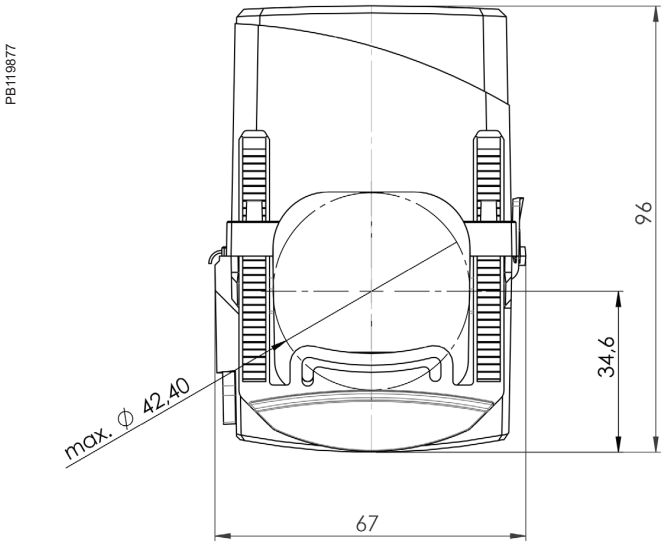

Split core CT dimensions (contd.)

Hx products

HM Dimensions

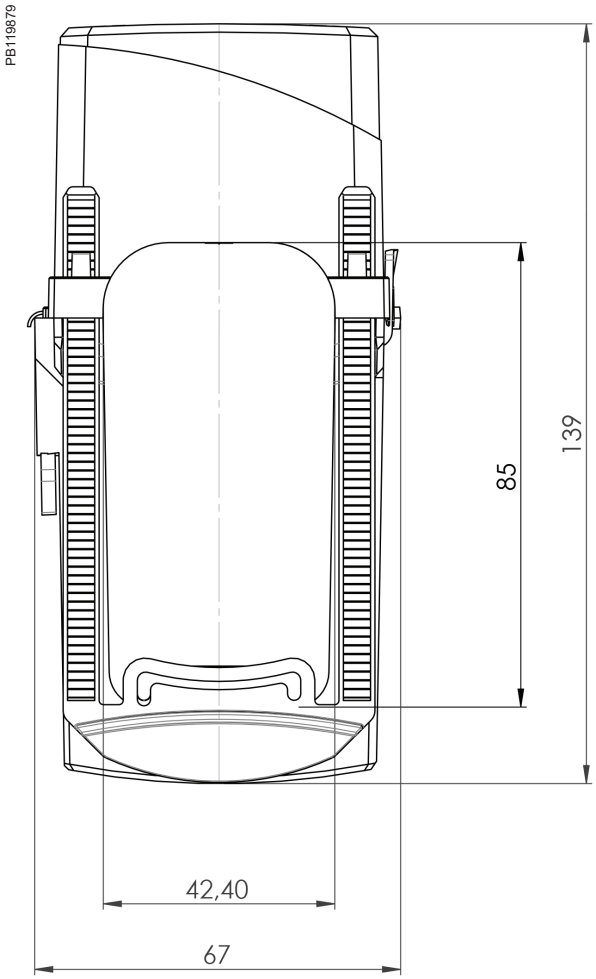

HP Dimensions

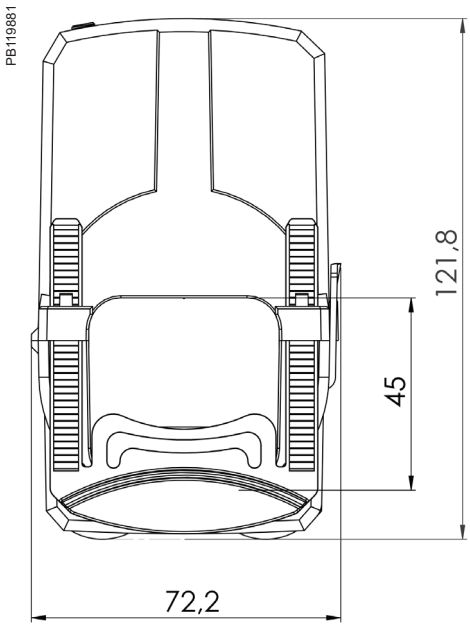

See the appropriate **Installation Guide** for correct installation instructions.

METSECTRx Series Rogowski Current Transducers

Schneider Electric is the global specialist in energy management with the most complete power monitoring product line. From simple indicators (analogue meters) and CTs, to world class energy meters and powerful compact power meters, these proven products satisfy any requirement.
Applications
Schneider Electric currently offers four proven models of PowerLogic™ Rogowski flexible core current transformers. These are available from 300 mm to 900 mm in length operating in a current range of 50 to 5000 A.

PB118060

METSECTRx Series Rogowski Current Transducers

The CTRx Series of Rogowski flexible rope style current transducers (CTs) provide secondary AC voltage proportional to the primary (sensed) current. Recommended to use with Schneider make EM35xxA, iEM35x5 and EM42xx series power meters.
The CTRx Series CTs provide a cost-effective means to transform electrical service amperages to a voltage compatible with monitoring equipment. The flexible core makes it easy to fit in tight enclosures. These products provide reinforced insulation between the sensed conductor and the output leads.

Technical specification

Specification for commercial reference	METSECTR25500, METSECTR30500, METSECTR46500, METSECTR60500, METSECTR90500
Range	PowerLogic™
Product or component type	Current transducer
Accessory / part category	Measurement accessory
Range compatibility	PowerLogic™ EM3500 - EM3555A EM3502A EM3560 EM3550A EM3560 EM3561A PowerLogic™ EM4200 - EM4236 EM4235 Acti9 iEM3000 - iEM3555 iEM3565
Current transformer type	Flexible core
Specification	
Connecting cable - flying lead	2.4 m 600 V AC max, voltage L-N sensed conductor
Connecting cable specification	1000 V AC UL style 21223 cable with 22 AWG leads
Coil current range	50 A to 5000 A
Network frequency of coil	50/60 Hz
Measurement accuracy of coil	±1 % from 50 A to 5000 A
Installation category of coil	600 V AC Cat IV
Pollution degree of coil	2
Environmental characteristics	
Standards	EN61010-1; UL61010-1; EN61010-2-032; UL61010-2-032, CAN/CSA-C22.2 No. 61010-1
Product certifications	CURus, UL recognized
Ambient air temperature for operation	-15 °C to 60 °C
Ambient air temperature for storage	-40 °C to 70 °C
Humidity range	0 to 95 % non-condensing
Altitude	2000 m max.
Protection degree	IP67
Commercial Reference Numbers	
METSECTR25500	PowerLogic™ Rogowski current transducers, 250 mm CT core length, 80 mm dia. CT, rope, 600 V AC, 5 kA
METSECTR30500	PowerLogic™ Rogowski current transducers, 300 mm CT core length, 96 mm dia. CT, rope, 600 V AC, 5 kA
METSECTR46500	PowerLogic™ Rogowski current transducers, 460 mm CT core length, 146 mm dia. CT, rope, 600 V AC, 5 kA
METSECTR60500	PowerLogic™ Rogowski current transducers, 600 mm CT core length, 191 mm dia. CT, rope, 600 V AC, 5 kA
METSECTR90500	PowerLogic™ Rogowski current transducers, 900 mm CT core length, 287 mm dia. CT, rope, 600 V AC, 5 kA

Please contact your Schneider Electric representative for complete ordering information.

Rogowski Current Transducers Dimensions

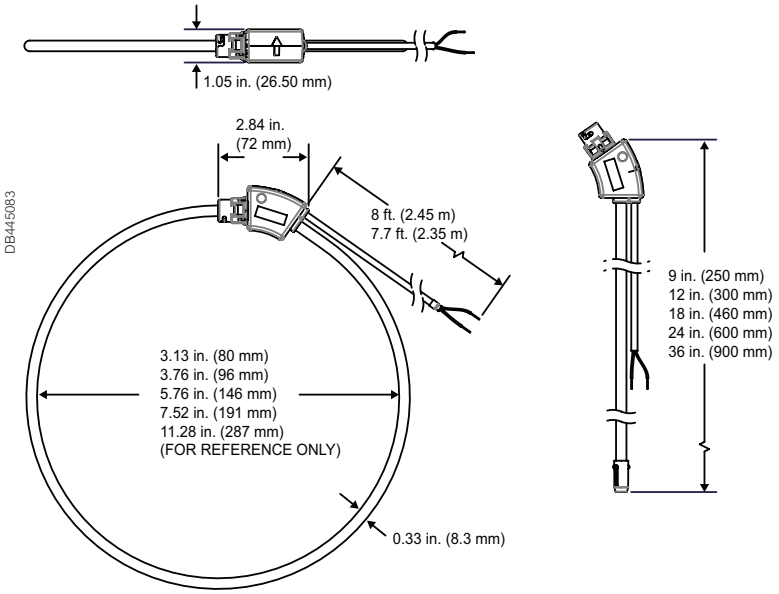

Dimensions	CT core thickness	CT core length (open)	Diameter (closed)
METSECTR25500	8 mm dia.	250 mm	80 mm
METSECTR30500	8 mm dia.	300 mm	96 mm
METSECTR46500	8 mm dia.	460 mm	146 mm
METSECTR60500	8 mm dia.	600 mm	191 mm
METSECTR90500	8 mm dia.	900 mm	287 mm

See the appropriate **Installation Guide** for correct installation instructions.

Panel Instruments

Schneider Electric panel instruments reliably comply with the most stringent standards, including IEC, EMI/EMC and safety, and we thoroughly test all products with recognized, third-party laboratories.

Our products are simple to install, configure, and use. This saves our partners time and money and lets them deliver the best solutions in a timely and cost-effective manner.

Whatever the size or type of application, the PowerLogic™ product line is an integral part of smart panels.

Analog Voltmeters and Ammeters are available in different form factors, panel mount 96 x 96 mm and 72 x 72 mm, DIN rail mount types.

Digital Voltmeters and Ammeters are available in DIN rail form factor.

Selector switches for selecting different line voltages and line current.

Hour counters for counting the operating hours of machineries.

DB119006

16029

PB101118

16003

PB112024

15202

PB107119

15126

PB112026

15440

16029

iAMP

16061

iVLT

Function

iAMP

Ammeters measure the current flowing through an electric circuit in amps.

iVLT

Voltmeters measure the potential (voltage) difference of an electric circuit in volts.

Common technical data

- Accuracy: Class 1.5
- Complies with standards IEC 60051-1, IEC 61010-1 and IEC 61000-4
- Ferromagnetic device
- Pseudo-linear scale over 90°
- Ammeters (except catalog number 16029):
  - connection on CT, ratio In/5, to be ordered separately interchangeable dials
- Temperature:
  - operating temperature: -25 °C to 55 °C
  - reference temperature: 23 °C
- Influence of temperature on accuracy: ±0.03 %/°C
- Utilisation frequency: 50 Hz to 60 Hz
- Consumption:
  - AMP: 1.1 VA
  - VLT catalog number 15060: 2.5 VA
  - VLT catalog number 16061: 3.5 VA
- Permanent overload:
  - AMP: 1.2 In
  - VLT: 1.2 Un
- Maximum overload for 5 s:
  - AMP: 10 In
  - VLT: 2 Un
- Connection: tunnel terminals for 1.5 to 6 mm² rigid cables

Commercial reference numbers

Type	Scale	Connection with CT	Width in mod. of 9 mm	Comm. ref. no.
iAMP with direct connection				
	0-30 A	no	8	16029
iAMP with connection on CT				
Basic device (delivered without dial)		X/5	8	16030
Dial	0-5 A			
	0-50 A	50/5		16032
	0-75 A	75/5		16033
	0-100 A	100/5		16034
	0-150 A	150/5		16035
	0-200 A	200/5		16036
	0-250 A	250/5		16037
	0-300 A	300/5		16038
	0-400 A	400/5		16039
	0-500 A	500/5		16040
	0-600 A	600/5		16041
	0-800 A	800/5		16042
	0-1000 A	1000/5		16043
	0-1500 A	1500/5		16044
	0-2000 A	2000/5		16045
iVLT				
	0-300 V		8	16060
	0-500 V		8	16061

See your Schneider Electric representative for complete ordering information.

PB112024

iAMP

15202

PB112023

iVLT

15201

PB112025

iFRE

15208

Function

iAMP
Ammeters measure in amps the current flowing through an electric circuit.

iVLT
Voltmeters measure in volts the potential (voltage) difference of an electric circuit.

iFRE
Frequency meters measure in hertz the frequency of an electric circuit from 20 to 600 V AC.

Common technical data

- Supply voltage: 230 V AC
- Operating frequency: 50 Hz to 60 Hz
- Display by red LED: 3 digits, h = 8 mm (0.31 in)
- Accuracy at full-scale : 0.5 % ±1 digit.
- Consumption: max. 5 VA or rated 2.5 VA
- Degree of protection:
  - IP40 on front face
  - IP20 at terminal level
- Connection: tunnel terminals for 2.5 mm^2 cables

Specific data

10 A direct reading ammeter
- Minimum value measured: 4 % of rating
- Measurement input consumption: 1 VA

Multi-rating ammeter
- Ratings:
  - in direct reading: 5 A
  - by CT (not supplied) configurable on the front face of the ammeter: 10, 15, 20, 25, 40, 50, 60, 100, 150, 200, 250, 400, 500, 600, 800, 1000, 1500, 2000, 2500, 4000, 5000 A
- Minimum value measured: 4 % of rating
- Measurement input consumption: 0.55 VA

Voltmeter
- Direct measurement: 0...600 V AC
- Input impedance: 2 MW
- Minimum value measured: 4 % of rating

Frequency meter
- Minimum value measured: 20 Hz
- Maximum value measured: 100 Hz
- Full-scale display: 99.9 Hz

Compliance with standards
- Safety: IEC/EN 61010-1
- EMC electromagnetic compatibility: IEC/EN 65081-1 and IEC/EN 65082-2

Commercial reference numbers

Type	Scale	Connection with CT	Width in mod. of 9 mm	Comm. ref. no.
Direct reading iAMP				
	0-10 A	No	4	15202
Multi-rating iAMP				
	0-5000 A	As per rating	4	15209
iVLT				
	0-600 V		4	15201
iFRE				
	20-100 Hz		4	15208

See your Schneider Electric representative for complete ordering information.

AMP for standard feeder

16009

AMP for motor feeder

16006

VLT

16005

Function

The 72 x 72 measurement devices are designed for flush-mounted installation on doors, wicket doors and front plates of enclosures and cubicles.

AMP

The ammeters measure in amps the current flowing through an electrical circuit.

VLT

The voltmeter measure in volts the potential difference (voltage) of an electrical circuit.

Common technical data

- Accuracy: Class 1.5
- Compliance with standard IEC 60051-1, IEC 61010-1 and IEC 61000-4
- Ferromagnetic device
- Scale length: 62 mm over 90°
- Mounting in enclosure or in cubicle
- Degree of protection: IP52
- Maximum operating position: 30° / vertical
- Temperature:
  - operation: -25 °C to 50 °C
  - reference: 23 °C
- Influence of temperature on accuracy: ±0.003 %/ °C
- Utilisation frequency: 50 Hz to 60 Hz

AMP specific technical data

- Needs a In/5 CT to be ordered separately
- Interchangeable dials to be ordered separately
- Consumption: 1.1 VA
- Permanent overload: 1.2 In
- Maximum overload for 5 s: 10 In

VLT specific technical data

- Consumption: 3 VA
- Permanent overload: 1.2 Un
- Maximum overload for 5 s: 2 Un

Commercial reference numbers

Type	Scale	Connection on CT	Comm. ref. no.
AMP for standard feeder			
Basic device (delivered without dial)		X/5	16004
1.3 In dial	0-50 A	50/5	16009
	0-100 A	100/5	16010
	0-200 A	200/5	16011
	0-400 A	400/5	16012
	0-600 A	600/5	16013
	0-1000 A	1000/5	16014
	0-1250 A	1250/5	16015
	0-1500 A	1500/5	16016
	0-2000 A	2000/5	16019
AMP for motor feeder			
Basic device (delivered without dial)		X/5	16003
3 In dial	0-30-90 A	30/5	16006
	0-75-225 A	75/5	16007
	0-200-600 A	200/5	16008
VLT			
	0-500 V		16005

See your Schneider Electric representative for complete ordering information.

AMP for standard feeder

16079

AMP for motor feeder

16076

VLT

16075

Function

The 96 x 96 measurement devices are designed for flush-mounted installation on doors, wicket doors and front plates of enclosures and cubicles.

AMP

The ammeters measure in amps the current flowing through an electrical circuit.

VLT

The voltmeter measure in volts the potential difference (voltage) of an electrical circuit.

Common technical data

- Accuracy: class 1.5
- Compliance with standard IEC 60051-1, IEC 61010-1 and IEC 61000-4
- Ferromagnetic device
- Scale length: 80 mm over 90°
- Mounting in enclosure or in cubicle
- Degree of protection: IP52
- Maximum operating position: 30° / vertical
- Temperature:
  - operation: -25 °C to 50 °C
  - reference: 23 °C
- Influence of temperature on accuracy: ±0.003 % / °C
- Utilisation frequency: 50 Hz to 60 Hz

AMP specific technical data

- Needs a In/5 CT to be ordered separately
- Interchangeable dials to be ordered separately
- Consumption: 1.1 VA
- Permanent overload: 1.2 In
- Maximum overload for 5S: 10 In

VLT specific technical data

- Consumption: 3 VA
- Permanent overload: 1.2 Un
- Maximum overload for 5S: 2 Un

Commercial reference numbers

Type	Scale	Connection on CT	Comm. ref. no.
AMP for standard feeder			
Basic device (delivered without dial)		X/5	16074
1.3 In dial	0-50 A	50/5	16079
	0-100 A	100/5	16080
	0-200 A	200/5	16081
	0-400 A	400/5	16082
	0-600 A	600/5	16083
	0-1000 A	1000/5	16084
	0-1250 A	1250/5	16085
	0-1500 A	1500/5	16086
	0-2000 A	2000/5	16087
	0-2500 A	2500/5	16088
	0-3000 A	3000/5	16089
	0-4000 A	4000/5	16090
	0-5000 A	5000/5	16091
	0-6000 A	6000/5	16092
AMP for motor feeder			
Basic device (delivered without dial)		X/5	16073
3 In dial	0-30-90 A	30/5	16076
	0-75-225 A	75/5	16077
	0-200-600 A	200/5	16078
VLT			
	0-500 V		16075

See your Schneider Electric representative for complete ordering information.

Function

The 48 x 48 selector switches are designed for flush-mounted installation on doors, wicket doors and front plates of enclosures and cubicles.

CMA

The ammeter selector switch uses a single ammeter (by means of current transformers) for successive measurement of the currents of a three-phase circuit.

CMV

The voltmeter selector switch uses a single voltmeter for successive measurement of the voltages (phase-to-phase and phase-to-neutral) of a three-phase circuit.

Common technical data

- Durability:
  - electrical: 100,000 operations
  - mechanical: 2,000,000 operations
- AgNi contact
- Operating temperature: -25 °C to 50 °C
- Compliance with standards IEC/EN 60947-3
- Degree of protection:
  - IP65 on front face
  - IP20 at terminal level

Commercial reference numbers

Type	Rating (A)	Voltage (V)	Number of positions	Comm. ref. no.
CMA	20		4	16017
CMV		500	7	16018

See your Schneider Electric representative for complete ordering information.

Connection

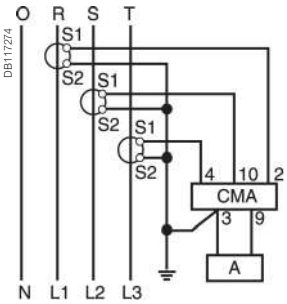

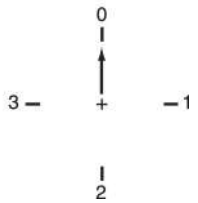

CMA

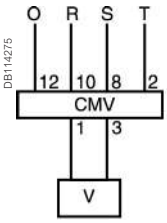

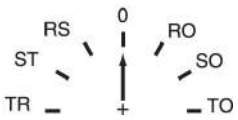

CMV

Reading 3 phase-to-earth voltages + 3 phase-to-phase voltages.

Note: when connecting do not remove the pre-cabling.
See appropriate Installation Guide for this product.

PB107119

15126

iCMA

PB107118

15125

iCMV

Function

iCMA

This 4-position ammeter selector switch uses a single ammeter (using current transformers) for successive measurement of the currents of a three-phase circuit.

iCMV

This 7-position voltmeter selector switch uses a single voltmeter for successive measurement of voltages (phase-to-phase and phase-to-neutral) of a three-phase circuit.

Common technical data

- Rotary handle
- Maximum operating voltage: 440 V, 50/60 Hz
- Nominal thermal current: 10 A
- Operating temperature: -20 °C to 55 °C
- Storage temperature: -25°C to 80°C
- Mechanical durability (AC21A-3 x 440 V): 2,000,000 operations
- Degree of protection:
  - IP66 on front face
  - IP20 at terminal level
- Electrical durability: 1,000,000 operations
- Connection: jumper terminals with captive screws, for cables up to 1.5 mm^2
- Complies with standards: IEC/EN 60947-3

Commercial reference numbers

Type	Rating (A)	Voltage (V AC)	Width in mod. of 9 mm	Comm. ref. no.
iCMA	10	415	4	15126
iCMV	10	415	4	15125

See your Schneider Electric representative for complete ordering information.

Connection

DB114272

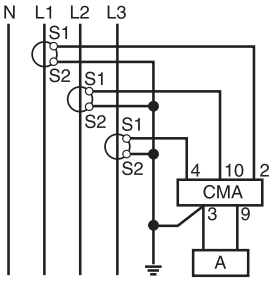

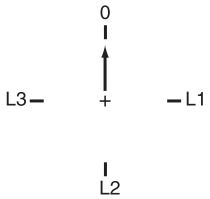

iCMA

DB114273

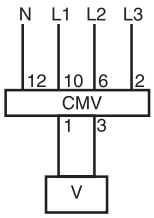

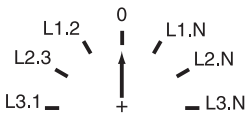

iCMV

See appropriate Installation Guide for this product.

PB112026

15440

iCH "DIN"

DB119003

15607

CH "48 x 48"

Function

Electromechanical counter that counts the operating hours of a machine or piece of electrical equipment. Giving a precise indication of operating time, the counter is used to decide when to carry out preventive maintenance.

Common technical data

- Electromechanical display
- Maximum display: 99999.99 hours
- Display accuracy: 0.01 %
- Without reset
- Storage temperature: -25 °C to 85 °C
- Connection: tunnel terminals for 2.5 mm2 cable

Specific technical data

iCH "DIN"

- Consumption: 0.15 VA
- Operating temperature: -10 °C to 70 °C
- Mounting on DIN rail

CH "48 x 48"

- Consumption:
  - 15607: 0.25 VA
  - 15608: 0.15 VA
  - 15609: 0.02 VA to 12 V and 0.3 VA to 36 V
- Operating temperature: -20 °C to 70 °C
- Degree of protection: IP65 on front face
- Mounting on front face of monitoring switchboards

Commercial reference numbers

Type	Voltage (V)	Width in mod. of 9 mm	Comm. ref. no.
iCH "DIN"	230 V AC ± 10 %/50 Hz	4	15440
CH "48 x 48"	24 V AC ± 10 %/50 Hz		15607
	230 V AC ± 10 %/50 Hz		15608
	12 to 36 V DC		15609

See your Schneider Electric representative for complete ordering information.

Connection

DB114262

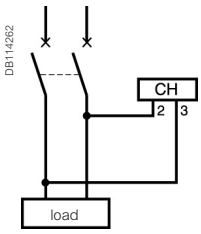

iCH "DIN"

DB114263

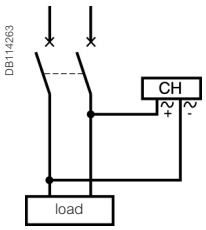

CH "48 x 48"

See appropriate Installation Guide for this product.

iCL.eps

15443

iCI impulse counter

Function

Electromechanical counter designed to count impulses emitted by: kilowatt-hour meters, temperature overrun detectors, people meters, speed meters, etc.

Common technical data

- Supply and metering voltage: 230 V AC ± 10 %, 50/60 Hz
- Consumption: 0.15 VA
- Maximum display: 9 999 999 impulses
- Without reset
- Metering data:
  - minimum impulse time: 50 ms
  - minimum time between 2 impulses: 50 ms
- Storage temperature: -25 °C to 85 °C
- Operating temperature: -10 °C to 70 °C
- Connection: tunnel terminals for 2.5 mm^2 cable

Commercial reference numbers

Type	Width in mod. of 9 mm	Comm. ref. no.
iCI	4	15443

Connection

DB114271

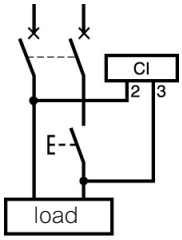

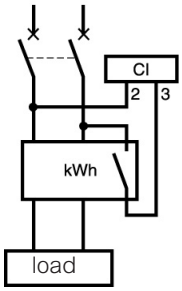

See appropriate Installation Guide for this product.

Analog ammeters and voltmeters iAMP, iVLT

DB103473

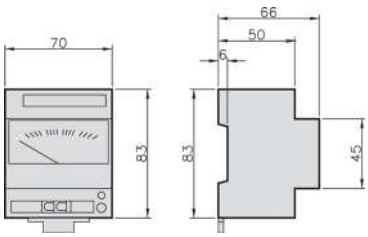

Digital ammeters, voltmeter and frequency meter iAMP, iVLT

DB103474

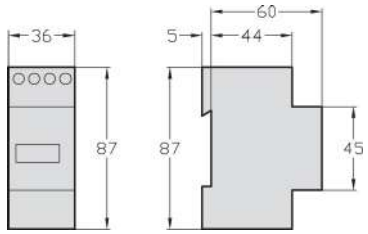

iCMA and iCMV selector switches

DB103475

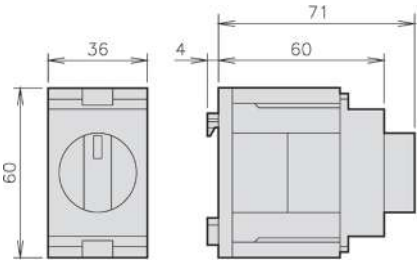

72 x 72 analog ammeters and voltmeter

DB103476

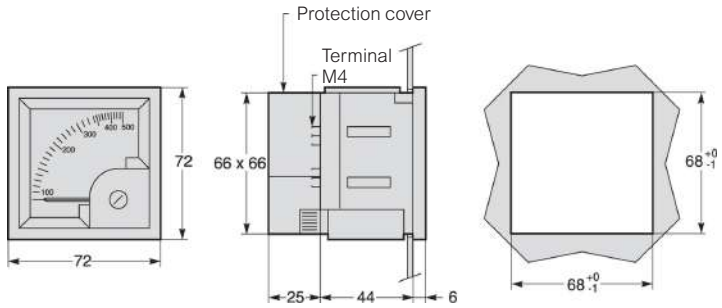

96 x 96 analog ammeters and voltmeter

DB103481

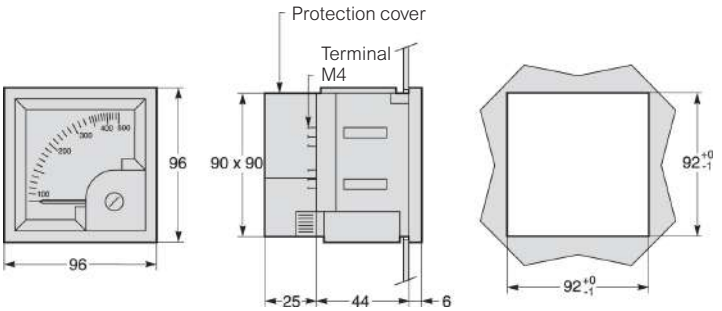

See the appropriate Installation Guide for this product.

48 x 48 CMA and CMV selector switches

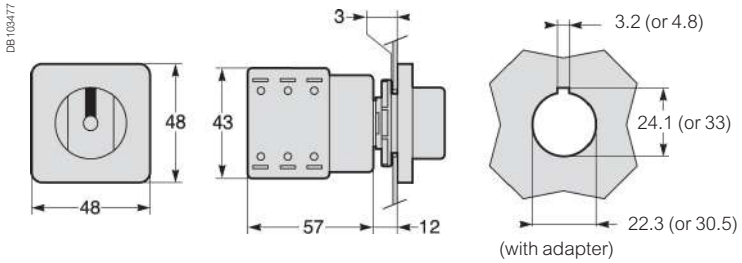

iCI impulse counter and iCH hour counter

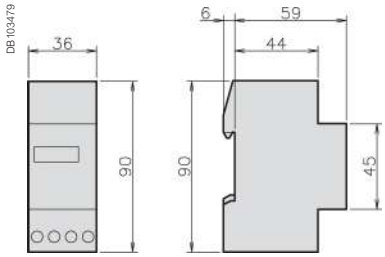

48 x 48 CH hour counters

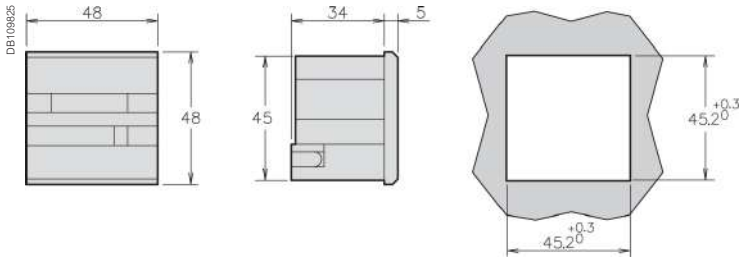

See the appropriate Installation Guide for this product.

Basic Energy Metering

Basic energy meters comply with a variety of applications: single-phase or three-phase circuits, basic kWh meters for elementary applications, to full-featured, dual tariff energy meters and power metering for network monitoring applications. Data is visible locally or accessible remotely. Wireless communication energy sensors with compact design allow to optimize panel size.

- Acti9 iEM2000 series
- Acti9 iEM2100 series
- Acti9 iEM2400 series
- Acti9 iEM3000 series
- PowerLogic™ EM3750 series
- PowerLogic™ PM3000 series
- PowerLogic™ PowerTag Energy series

PB108451

A9MEM2000

PB118059

A9MEM2055

PB118059

A9MEM2155

PB113702

A9MEM2435

PB108450

A9MEM3135

PB108450

METSEPM3250

A9MEM1580

A9MEM1580

Acti9 iEM2xxx Range

iEM2000, iEM2100, iEM2400 series

The Acti9 iEM2xxx range energy meters offer a cost-attractive, competitive range of single-phase DIN rail-mounted energy meters ideal for sub-billing, cost allocation applications and support two protocols (Modbus RS-485 or M-Bus) that allow them to integrate seamlessly into any energy monitoring system.

Applications

- Monitor power consumption for each floor, office sector, unit or workshop with maximum current from 40 A, 45 A, 63 A and 100 A
- Allocate energy cost to lower cost of operations, optimise building's power efficiency
- Connect to power management software to take full advantage of the IoT digital power installation
- Various businesses, industrial and residential applications

PB108451

PB118059

PB118059

PB113702

A9MEM2000 A9MEM2055 A9MEM2155 A9MEM2435

The solution for:

All markets that can benefit from a solution that includes Acti9 PowerLogic™ iEM2000, iEM2100, iEM2400 series meters:

- Buildings
- Industry
- Data Centre & networks
- Infrastructures (airport, road tunnels, telecom...)

Benefits

The Acti9 PowerLogic™ iEM2xxx meters are economical and easy to install in panelboards and switchboards:

- DIN rail mounted, compact size
- Accurate data measurement with Class 1 accuracy for kWh and Class 2 accuracy for kVARh*
- Measures basic electrical parameters like voltage, current, frequency, power factor and power*

Energy management system:

To get the most effective use from your Schneider Electric measurement and metering devices, we offer a range of dedicated data loggers and gateways for your building energy management.

*in selected references.

Competitive advantages*

- Compact size - Compatible with Acti9 range, 18 mm width in iEM2000, 36 mm width in iEM2100 and iEM2400
- Display - available in displayless, electromech counter display or LCD display
- Communication - Pulse output, Modbus RS-485 or M-Bus communication port
- Self-powered, direct connect upto 100 A
- MID compliant providing certified accuracy and data security
- Four quadrant measurement
- Two tariffs
- Basic electrical parameter measurement eg. V, I, F, PF, PQS

Conformity of standards

- BS/EN/IEC 61557-12:2018/AMD1:2021*
- EN / IEC 62053-21
- EN / IEC 62053-23*
- EN 50470-1/3:2006*
- EN / IEC 62052-11
- IEC 62052-31:2015*
- BS / EN / IEC 61326-1
- BS / IEC / EN 61010-1
- CE and UKCA certified

iEM2xxx Range Feature selection

Functions	iEM2000T	iEM2000/iEM2010	iEM2050/ iEM2055	iEM2100/ iEM2105	iEM2110	iEM2135/ iEM2155	iEM2150	iEM2435/ iEM2455
40A Imax	■	■						
45A Imax			■					
63A Imax				■	■	■	■	
100A Imax								■
Communication port			RS-485			M-Bus (iEM2135) RS-485 (iEM2155)	RS-485	M-Bus (iEM2435) RS-485 (iEM2455)
Pulse output (Energy)	1	1 (iEM2010)	1	1 (iEM2105)	2			2
Digital inputs (Tariff switching)					1	1		
Display Type	No	Electromechanical Counter	LCD					
Width (mm)	18		17.5	36				35.7
Multi Tariff counter			2		2	2		2
Wh accuracy (IEC 62053-21)	Class 1							
Compliance to IEC 61557-12	■	■		■				
VARh accuracy (IEC 62053-23)	Class 2				Class 2			
4 Quadrants measurement			■		■			
MID Class B (EN 50470-3), 50 Hz		■	■ (iEM2055)		■	■		■
V A F PF			■		■			
Power (P Q S)			■		■			

See your Schneider Electric representative for complete ordering information.

Acti9 iEM2xxx Range technical specifications

iEM2000, iEM2100, iEM2400 series technical specifications

	iEM2000/ iEM2000T/ iEM2010	iEM2050/iEM2055	iEM2100/iEM2105	iEM2110/iEM2135/ iEM2150/iEM2155	iEM2435/iEM2455
Type of measurement	True rms for single-phase AC systems with direct connect/whole current measurement				
Max. current (Imax)	40 A	45 A	63 A	63 A	100 A
Basic current (Inom)	5 A		10 A	5 A	5 A
Starting current	40 mA	20 mA	40 mA	15 mA	20 mA
Voltage range (L-N)	184 to 276 V AC	195 to 253 V AC	207 to 253 V AC	184 to 276 V AC	195 to 253 V AC
Frequency range	50 Hz MID and IEC / 60 Hz IEC				
Max. KWh resolution	999999.9 kWh	9999.99 kWh to 99999.9 MWh	999.99 kWh/MWh	999999.99 kWh	9999.99 kWh to 99999.9 MWh
Pulse output	100 pulses/kWh (120 ms), 5...35 V DC, 1...20 mA (except iEM2000)	10000, 2000, 1000, 100, 10, 1, 0.1, 0.01 pulses/kWh (11.2 or 32 ms), 5...27 V DC, max 100 mA	1 pulse/kWh (200 ms), 18 mA at 24 V DC or 100 mA at 230 V AC (only for iEM2105)	1 to 1000 pulses/ kWh or kVARh (30 to 100 ms) (only for iEM2110)	10000, 2000, 1000, 100, 10, 1, 0.1, 0.01 pulses/kWh, (5...32 ms), 5...27 V DC, max 100 mA
Meter constant LED	3200 flashes per kWh	10000 flashes per kWh	1000 flashes per kWh	1000 flashes per kWh	10000 flashes per kWh
Cable size (power connection)	10 mm^2	10 mm^2	16 mm^2	33 mm^2	35 mm^2
Cable size (for communications)	4 mm^2	2.5 mm^2	6 mm^2	4 mm^2	2.5 mm^2
Internal burden, at 240 V L-N, 50 Hz	<10 VA		<2.5 VA	<3 VA	<10 VA
Active energy	■				
Reactive energy		■		■	■
Active power		■		■	■
Reactive power		■		■	■
Apparent power		■			■
Power Factor		■		■	■
Current and voltage		■		■	■
Frequency		■		■	■
LED for local signalling	Green LED: power ON Yellow LED: 3200 impulse per kWh	Red LED: 10000 impulse per kWh	Yellow LED: 1000 impulse per kWh	Yellow LED: 1000 impulse per kWh	Red LED: 10000 impulse per kWh
CE, UKCA* certification	■				
IP degree of protection (IEC 60529)	IP40 front panel and IP20 casing	IP51 front panel and IP20 casing	IP40 front panel and IP20 casing		IP51 front panel and IP20 casing
Operating temperature	-10°C to +55°C For iEM2000T: Temp range is: I <32 A: -25 °C to +65 °C, I > 32 A: -25 °C to +55 °C (K55)	-25°C to +55°C			
Storage Temperature	-40°C to +70°C	-30°C to +70°C	-25°C to +70°C	-25°C to +70°C	-30°C to +70°C
Humidity at +55°C	<95 %	<75 %	<95 %	<95 %	<75 %
Green Premium product (RoHS, China RoHS, REACH, PEP, EOL)	■				
Altitude	<2000 m	<2000 m	<3000 m	<2000 m	<2000 m
Measurement category	Category III				
Pollution degree	2				
Commercial reference number	A9MEM2000 A9MEM2000T A9MEM2010	A9MEM2050 A9MEM2055	A9MEM2100 A9MEM2105	A9MEM2110 A9MEM2135 A9MEM2150 A9MEM2155	A9MEM2435 A9MEM2455

* in selected references.

Acti9 iEM2xxx range dimensions

iEM2000/iEM2000T/iEM2010 dimensions

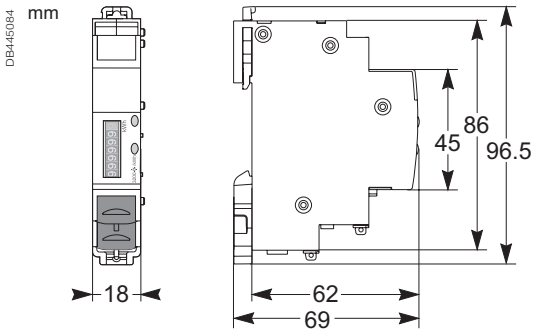

Maximum diameter power connection clamps 8 mm² (solid copper). See the appropriate product Installation Guide for complete instructions.

iEM2050/iEM2055 dimensions

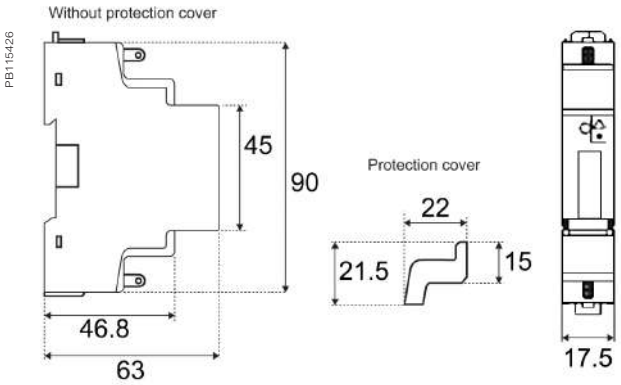

Maximum diameter power connection clamps 8 mm² (solid copper). See the appropriate product Installation Guide for complete instructions.

iEM2100/iEM2105 dimensions

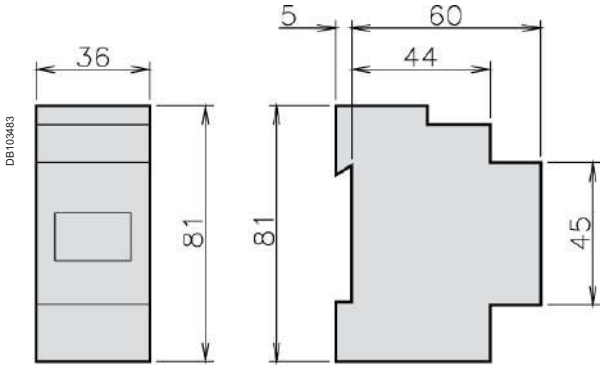

iEM2110/iEM2135/iEM2150/iEM2155 dimensions

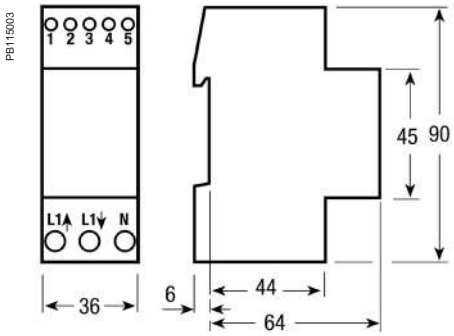

iEM2435/iEM2455 dimensions

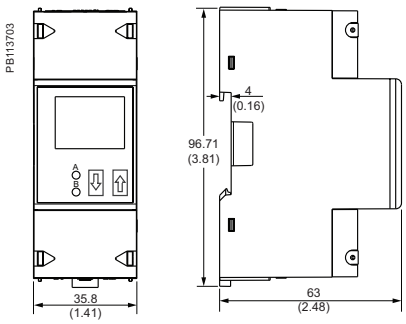

*Please see the appropriate **Installation Guide** for accurate and complete information on the installation of this product.*

Acti9 iEM2xxx range commercial reference numbers

iEM2000, iEM2100, iEM2400 series commercial/ordering reference numbers

Commercial reference number	Product description
A9MEM2000T	iEM2000T energy meter, Class 1, 230 V, 40 A, pulse output, no display
A9MEM2000	iEM2000 energy meter, Class 1, 230 V, 40 A, MID, electromechanical counter display
A9MEM2010	iEM2010 energy meter, Class 1, 230 V, 40 A, MID, pulse output, electromechanical counter display
A9MEM2050	iEM2050 power and energy meter, Class 1, 230 V, 45 A, RS-485, 2 tariffs, pulse output, LCD display
A9MEM2055	iEM2055 power and energy meter, Class 1, 230 V, 45 A, RS-485, MID, 2 tariffs, pulse output, LCD display
A9MEM2100	iEM2100 energy meter, Class 1, 230 V, 63 A, LCD display
A9MEM2105	iEM2105 energy meter, Class 1, 230 V, 63 A, pulse output, LCD display
A9MEM2110	iEM2110 power and energy meter, Class 1, 230 V, 63 A, MID, 2 tariffs, 2 pulse outputs, 4 quadrants, LCD display
A9MEM2135	iEM2135 power and energy meter, Class 1, 230 V, 63 A, M-Bus, MID, 2 tariffs, 4 quadrants, LCD display
A9MEM2150	iEM2150 power and energy meter, Class 1, 230 V, 63 A, RS-485, 4 quadrants, LCD display
A9MEM2155	iEM2155 power and energy meter, Class 1, 230 V, 63 A, RS-485, MID, 2 tariffs, 4 quadrants, LCD display
A9MEM2435	iEM2435 power and energy meter, Class 1, 230 V, 100 A, M-Bus, MID, 2 tariffs, 2 pulse outputs, 4 quadrants, LCD display
A9MEM2455	iEM2455 power and energy meter, Class 1, 230 V, 100 A, RS-485, MID, 2 tariffs, 2 pulse outputs, 4 quadrants, LCD display

See your Schneider Electric representative for complete ordering information.

Acti9 iEM3000 Series

The Acti 9 iEM3000 series energy meters is a cost-attractive, feature-rich energy metering offer for DIN rail, modular enclosures. With Modbus, BACnet, M-Bus and LonWorks protocol support, you can easily integrate these meters into commercial and non-critical buildings to add simple energy management applications to any BMS, AMR or EMS system.

Applications

Cost management applications

- Bill checking to verify that you are only charged for the energy you use.
- Sub-billing individual tenants for their energy consumption, including WAGES.
- Aggregation of energy consumption, including WAGES, and allocating costs per area, per usage, per shift, or per time within the same facility.

Network management applications

- Basic metering of electrical parameters to better understand the behaviour of your electrical distribution system.

PB108450

A9MEM3135

PB113704

A9MEM3355

PB113705

A9MEM3255

More than just kWh meters, the Acti 9 iEM3000 series meters provide a full view of both energy consumption and on-site generation with full four-quadrant measurement of active and reactive energy delivered and received. Additionally, extensive real-time measurements (V, I, P, PF) give customers greater detail on their energy usage, and multiple tariffs give customers the flexibility to match the billing structure of their utility.

The solution for

All markets that can benefit from a solution that includes PowerLogic™ iEM3000 series meters:

- Buildings & industry
- Data centres and networks
- Infrastructure (airports, road tunnels, telecom)

Benefits

Optimise your energy consumption & enable energy efficiency practices:

- Collect and analyse energy consumption data from each area for each type of load or circuit
- Gain an accurate understanding of business expenses by allocating the energy-related costs
- Identify energy savings opportunities and monitor continuously
- Use information to implement actions designed to reduce energy consumption

Monitor the energy consumption of your tenants or customers and establish accurate invoices:

- Drive energy-efficient behaviour
- Allow building owners to bill tenants for individual measured utility usage
- Give accurate and achievable objectives for energy savings

Features

- Multi-line circuit: Measure individual phase energy in three phase network system
- Partial and Total energy: Separate counters for measuring active, reactive and apparent energy
- 4 Quadrant measurement: For measuring quadrant based power and energy
- Multi tariff energy: Up to 4 counters activated through RTC, digital inputs or command register
- Digital input/output: For status monitoring/tariff control and energy pulsing/overload alarm
- Demand measurement: Per-phase and average current, total power for active, reactive and apparent
- Current: Direct connected/ whole current with the option of 63 A or 125 A, 1 A or 5 A CT operated, LVCT or Rogowski coil supported
- Internal clock: Quartz crystal based back up by super capacitor

Competitive advantages

- Compact size
- MID compliant for Wh and VARh (selected models) providing certified accuracy and data security
- Programmable digital inputs/outputs
- Multi-tariff capability
- Onboard Modbus, LonWorks, M-Bus or BACnet communication*
- Baud Rate configurable
- Communication protection: enable or disable through communication
- A complete range of energy meters
- Compatible with Acti 9 range
- Direct connect up to 125 A
- Password: configurable from 0-9999*
- Pulse output*: configurable pulse constant (imp/kWh, imp/kVARh), pulse width (ms)

Energy management system:

To get the most effective use from your Schneider Electric measurement and metering devices, we offer a range of dedicated data loggers and gateways for your building energy management.

Conformity of standards*

- BS / EN / IEC 61557-12
- EN / IEC 62053-21
- EN / IEC 62053-22
- EN / IEC 62053-23
- EN 50470-3
- EN 50470-1
- METAS
- EN / IEC 62052-11
- BS / EN / IEC 61326-1
- EN / IEC 62052-31:2015
- BS / IEC / EN / UL 61010-1
- ANSI C12.20 / ANSI C12.16
- NMI M 6-1, RCM
- UL, CE and UKCA certified
- CAN/CSA-C22.2
- EAC, KZ

* Available in selected references

Acti 9 iEM3000 Series

Feature selection

Current Input/ Wh Accuracy	iEM3000 series Energy meters							
63 A Direct/ Class 1	iEM3100	iEM3115	iEM3110	iEM3135	iEM3150	iEM3155	iEM3165	iEM3175
1 A or 5 A CT/ Class 0.5S (+1)	iEM3200	iEM3215	iEM3210	iEM3235	iEM3250	iEM3255	iEM3265	iEM3275
125 A Direct/ Class 1	iEM3300		iEM3310	iEM3335	iEM3350	iEM3355	iEM3365	iEM3375
1/3rd or 1 V LVCT/ Class 0.5S						iEM3455	iEM3465	
Rogowski coil/ Class 0.5S						iEM3555	iEM3565	
Communication Protocol								
Modbus					■	■		
M-Bus				■				
BACnet							■	
LonWorks								■
Measurement (Integrated)								
Active energy - Total and Partial energy	■	■	■	■	■	■	■	■
4 Quadrant Active, Reactive energy and Apparent energy				■		■	■	■
MID compliant (Wh) (+2) MID compliant (VARh) (+2)		■	■	■		■	■	■
Demand (per-ph & average current, total power for P Q S) (+3)						■	■	
Peak Demand (per-ph & average current, total power for P Q S) (+3)						■	■	
Measurement (Instantaneous)								
Voltage				■	■	■	■	■
Current				■	■	■	■	■
Power - P Q S				■	■	■	■	■
Power factor				■	■	■	■	■
Frequency				■	■	■	■	■
Multi-Tariff, control by								
Internal clock		4		4		4	4	4
Digital Inputs		4		2		2	2	2
Communication		-		4		4	4	4
Digital inputs								
For Status, Tariff control or Input monitoring				1		1	1	1
Tariff control only		2						
Digital outputs								
Energy pulsing or Overload alarm				1		1	1	
Pulse output only			1					
Internal clock								
Quartz crystal based		■		■		■	■	■
Date/time format (DD-MMM-YYYY/hh:mm)		■		■		■	■	■
Commercial reference								
Commercial References/ordering references	A9MEM3100 A9MEM3200 A9MEM3300	A9MEM3115 A9MEM3215	A9MEM3110 A9MEM3210 A9MEM3310	A9MEM3135 A9MEM3235 A9MEM3335	A9MEM3150 A9MEM3250 A9MEM3350	A9MEM3155 A9MEM3255 A9MEM3355 A9MEM3455 A9MEM3555	A9MEM3165 A9MEM3265 A9MEM3365 A9MEM3465 A9MEM3565	A9MEM3175 A9MEM3275 A9MEM3375

(+1) MID certification available for x/5 A and x/1 A.
(+2) MID certification not applicable for iEM34xx and iEM35xx series.
(+3) Demand parameters available in iEM34xx and iEM35xx series only.

See your Schneider Electric representative for complete ordering information.

Acti 9 iEM3000 Series

Technical Specifications

		iEM31xx	iEM32xx	iEM33xx	iEM34xx	iEM35xx
Width in mm x number of modules		18 mm x 5	18 mm x 5	18 mm x 7	18 mm x 5	18 mm x 5
Wiring type (scheme)		3PH3W, 3PH4W, 1PH2W L-N, 1PH2W L-L, 1PH3W L-L-N				
Operating Temperature		-25°C to 70°C (-13 °F to 158 °F)				
Storage temperature		-40 °C to 85 °C (-40 °F to 185 °F)				
Wiring capacity		16 mm²	6 mm² for I and 4 mm² for V	50 mm²	6 mm² for I and 4 mm² for V	
LCD display		99999999.9 kWh	99999999.9 kWh / MWh	99999999.9 kWh	99999999.9 kWh / MWh	
IP Protection		IP40 front, IP20 casing				
Over voltage and measurement		Category III, Pollution Degree 2				
Operating Voltage		3 x 100/173 V AC to 3 x 277/480 V AC (50/60 Hz)				
Operating Current		0.5 A to 63 A	*Inom* 5 A: 50 mA to 6 A *Inom* 1 A: 10 mA to 1.2 A	1 A to 125 A	0.022 V to 0.4 V (0.333 V *Inom*) or 0.05 V to 1.2 V (1 V *Inom*) LVCTs	50 to 5000 A Rogowski Coil
Altitude		< 3000 m (9842 ft)				
Humidity		5% – 95%				
Voltage inputs	Measured voltage	Wye: 100 - 277 V L-N, 173 - 480 V L-L ±20% Delta: 173 - 480 V L-L ±20%				
	Overload	332 V L-N or 575 V L-L				
	Impedance	3 MΩ	3 MΩ	6 MΩ	3 MΩ	
	Frequency	50 / 60 Hz ±10%				
	Measurement category	III				
	Minimum wire temperature rating required	90 °C (194 °F)	90 °C (194 °F)	105 °C (221 °F)	90 °C (194 °F)	
	Maximum device consumption	-	< 10 VA	-	< 10 VA	
	Wire	16 mm² / 6 AWG	2.5 mm² / 14 AWG	50 mm² / 1 AWG	2.5 mm² / 14 AWG	
	Wire strip length	11 mm / 0.43 in	8 mm / 0.31 in	13 mm / 0.5 in	8 mm / 0.31 in	
	Torque	1.8 Nm / 15.9 in•lb	0.5 Nm / 4.4 in•lb	3.5 Nm / 30.9 in•lb	0.5 Nm / 4.4 in•lb	
Current inputs	Nominal current	-	1 A or 5 A	-	-	-
	Measured current	0.5 A to 63 A	20 mA to 6 A	1 A to 125 A	-	
	Withstand	10 A continuous, 20 A at 10 sec/hr			-	-
	Minimum wire temperature rating required	-	90 °C (194 °F)	-	90 °C (194 °F)	
	Impedance	< 0.3 mΩ	< 1 mΩ	< 0.2 mΩ	-	-
	Frequency	50 / 60 Hz ±10%				
	Burden	< 10 VA at 63 A	< 0.036 VA at 6 A	< 10 VA at 125 A		
	Wire	16 mm² / 6 AWG	6 mm² / 10 AWG	50 mm² / 1 AWG	6 mm² / 10 AWG	
	Wire strip length	11 mm / 0.43 in	8 mm / 0.31 in	13 mm / 0.5 in	8 mm / 0.31 in	
	Torque	1.8 Nm / 15.9 in•lb	0.8 Nm / 7.0 in•lb	3.5 Nm / 30.9 in•lb	0.8 Nm / 7.0 in•lb	
	Split-core LVCTs	-	-	-	0.333 V or 1 V nominal	
	Rogowski Coil	-	-	-	U018 Series of Rogowski Coils (up to 5000 A)	
	Minimum wire temperature rating required	-	-	-	90 °C (194 °F)	

Acti 9 iEM3000 Series

PB108448

A9MEM3455

PB112478

LVCT00102S

PB108449

A9MEM3565

PB118060

METSECTR25500

Recommended* Schneider make Split-core LVCT for iEM3455 and iEM3465

Part Number	Sensing Current	Frequency	Output
LVCT00102S	100A	50/60Hz	0 to 1/3V
LVCT00202S	200A	50/60Hz	0 to 1/3V
LVCT00302S	300A	50/60Hz	0 to 1/3V
LVCT00403S	400A	50/60Hz	0 to 1/3V
LVCT00603S	600A	50/60Hz	0 to 1/3V
LVCT00803S	800A	50/60Hz	0 to 1/3V
LVCT00804S	800A	50/60Hz	0 to 1/3V
LVCT01004S	1000A	50/60Hz	0 to 1/3V
LVCT01204S	1200A	50/60Hz	0 to 1/3V
LVCT01604S	1600A	50/60Hz	0 to 1/3V
LVCT02004S	2000A	50/60Hz	0 to 1/3V
LVCT02404S	2400A	50/60Hz	0 to 1/3V
LVCT00050S	50A	50/60Hz	0 to 1/3V
LVCT00101S	100A	50/60Hz	0 to 1/3V
LVCT00201S	200A	50/60Hz	0 to 1/3V

* Split core LVCT with 1 V output can also be used.

Rogowski Coil for iEM3555 and iEM3565

Part Number	Sensing Current	Frequency	Lead length (m)	Approximate Inside Diameter (mm)
METSECTR25500	5000A	50/60Hz	2.35	80
METSECTR30500	5000A	50/60Hz	2.35	96
METSECTR46500	5000A	50/60Hz	2.35	146
METSECTR60500	5000A	50/60Hz	2.35	191
METSECTR90500	5000A	50/60Hz	2.35	287

Measurement accuracy

		As per EN / IEC 62053-21/22/23	As per BS / EN / IEC 61557-12	As per EN 50470-3	Current range of operation
iEM31xx	Active energy	Class 1 (IEC 62053-21)	Class 1 (PMD DD)	Class B	I*max*=63 A, I*ref*=10 A, I*min*=0.5 A, and I*st*=0.04 A
	Reactive energy	Class 2 (IEC 62053-23)	Class 2 (PMD DD)	-	I*max*=63 A, I*b*=10 A, and I*st*=0.05 A
iEM33xx	Active energy	Class 1 (IEC 62053-21)	Class 1 (PMD DD)	Class B	I*max*=125 A, I*ref*=20 A, I*min*=1 A, and I*st*=0.08 A
	Reactive energy	Class 2 (IEC 62053-23)	Class 2 (PMD DD)	-	I*max*=125 A, I*b*=20 A, and I*st*=0.1 A
iEM32xx (x/1 A Current input)	Active energy	Class 1 (IEC 62053-21)	Class 1 (PMD SD, PMD Sx)	Class B	I*max*=1.2 A, I*nom*=1 A, and I*st*=0.002 A
	Reactive energy	Class 2 (IEC 62053-23)	Class 2 (PMD Sx)	-	I*max*=1.2 A, I*nom*=1 A, and I*st*=0.003 A
iEM32xx (x/5 A Current input)	Active energy	Class 0.5S (IEC 62053-22)	Class 1 (PMD SD, PMD Sx)	Class C	I*max*=6 A, I*nom*=5 A, and I*st*=0.005 A
	Reactive energy	Class 2 (IEC 62053-23)	Class 2 (PMD Sx)	-	I*max*=6 A, I*nom*=5 A, and I*st*=0.015 A
iEM34xx (LVCT, 0.333/1.0 V at I*nom*) Field selectable	Active energy	±1%	-	-	Low voltage output for 0.333 V LVCT, I*max*=0.399 V, I*nom*=0.333 V, and I*min*=0.022 V
	Reactive energy	±2%	-	-	
iEM35xx (from 50 A to 5000 A)	Active energy	±1%	-	-	I*max*=5000 A, *Imin*=50 A
	Reactive energy	±2%	-	-	

Acti 9 iEM3000 Series dimensions

iEM3000/iEM3200 series dimensions

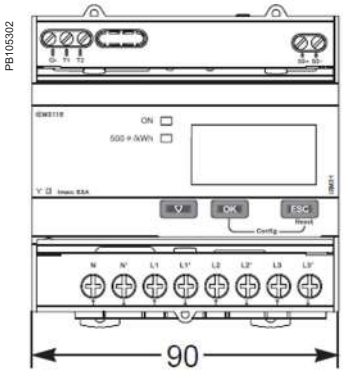

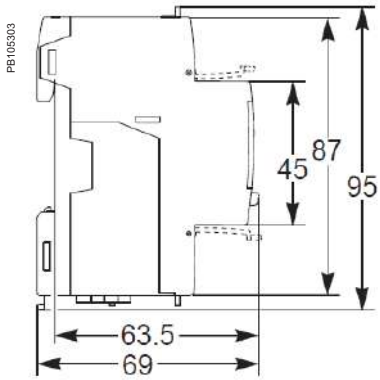

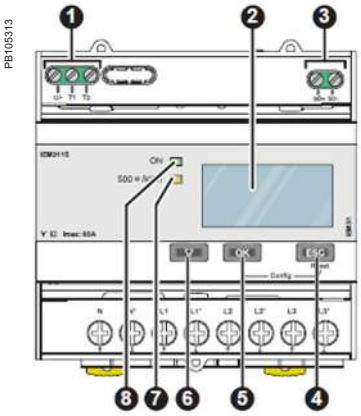

Acti 9 iEM3100/iEM3200 Series front flaps open and closed

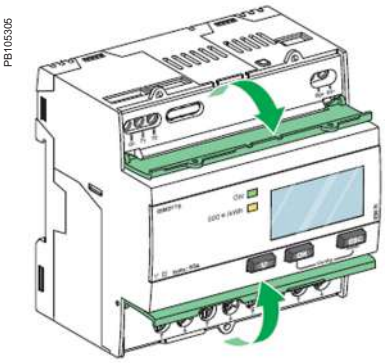

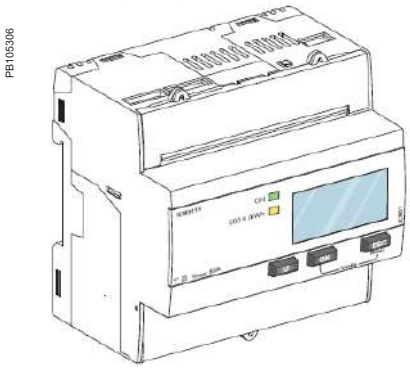

Acti 9 iEM3000 Series parts
1. Digital inputs for tariff control (iEM3115 / iEM3215)
2. Display for measurement and configuration
3. Pulse out for remote transfer (iEM3110 / iEM3210)
4. ESC Cancellation
5. OK Confirmation
6. ▽ Selection
7. Flashing yellow meter indicator to check accuracy
8. Green indicator: on/off, error

iEM3300 series dimensions

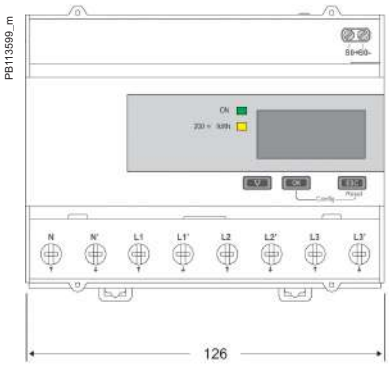

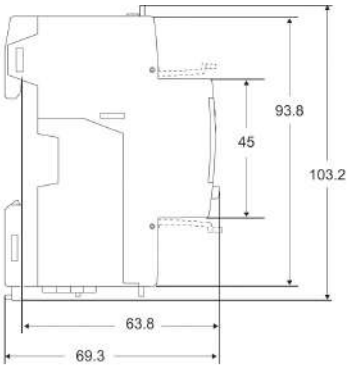

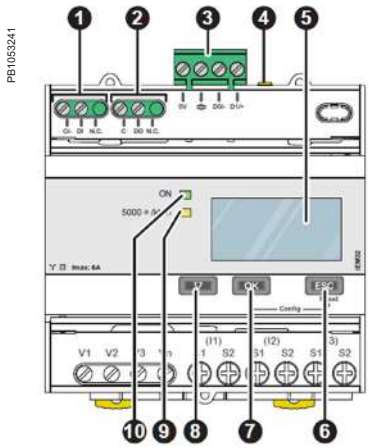

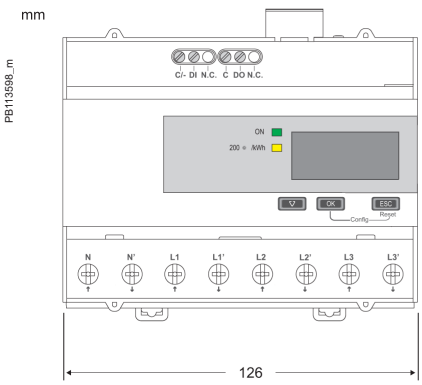

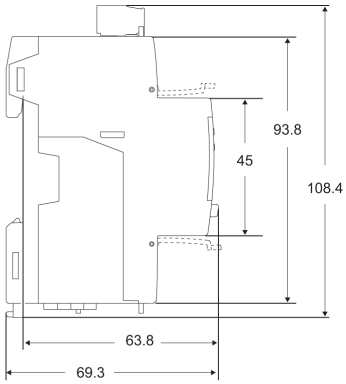

Acti 9 iEM3000 Series parts
1. Digital inputs for tariff control (iEM3115 / iEM3215)
2. Display for measurement and configuration
3. Pulse out for remote transfer (iEM3110 / iEM3210)
4. ESC Cancellation
5. OK Confirmation
6. ▽ Selection
7. Flashing yellow meter indicator to check accuracy
8. Green indicator: on/off, error

*Please see the appropriate **Installation Guide** for accurate and complete information on the installation of this product.*

PowerLogic™ EM3570 Series

The PowerLogic™ EM3570 series DIN rail mount energy meters with Ethernet are the new benchmark for affordable and precision metering application.

Engineered on the trusted PowerLogic platform, Ethernet-enabled EM3570 DIN rail meters are designed to install easily and integrate seamlessly with existing BACnet/IP and Modbus TCP/IP networks common in today's building and power management systems. With wide range CT compatibility, high reliability, IEC 61557-12 and UL2808 compliance, as well as ASHRAE 90.1 for power and energy logging capability, EM3570 meters support the energy efficiency designs of most buildings and are ideally suited for energy cost management applications.

Applications

Capable of essential cost management:

- Energy monitoring in building automation systems
- Renewable energy
- Energy management
- Commercial sub-metering
- Industrial monitoring
- Cost allocation

Also ideal for electrical network management:

- Track real-time power conditions
- Monitor control functions
- Provide basic power quality values
- Extended data log feature support up to 3 years
- Analyze equipment and network status
- BACnet/IP and Ethernet TCP/IP protocol support

PB124812

The solution for

Markets that can benefit from a solution that includes PowerLogic™ EM3570 series meters:

- Buildings
- Industry
- Healthcare
- Data Center and networks
- Infrastructure

Benefits

System integrators' benefit

- Ease of integration
- Ease of setup
- Cost effectiveness

Panel builders' benefit

- Ease of installation
- Cost effectiveness
- Aesthetically pleasing
- Simplified ordering
- Externally powered with LVDC control power
- Digital inputs
- Relay output

End users' benefit

- Retrofitment in existing panel with Split core LVCT or Rogowski coil
- Ease of use
- Comprehensive, consistent and superior performance
- Maximize uptime, eliminate faults, and enhance safety
- Cybersecurity features

Competitive advantages

- Easy to install and operate
- Easy for circuit breaker monitoring and control
- 2GB memory for data logging up to 3 years with 16 parameters in 15 min interval. Flexibility of selecting parameters from 75 different parameters with option of setting the logging interval from 10 sec to 32767 sec
- Load management combined with alarm and timestamping
- High performance and accuracy
- Onboard BACnet/IP and EthernetTCP/IP protocol support
- Low voltage DC control powered for safer installation

Power management solutions

Schneider Electric provides innovative power management solutions to increase your energy efficiency and cost savings, maximize electrical network reliability and availability, and optimize electrical asset performance.

Features

- Open, robust communications
  - Ethernet protocol and daisy-chain functionality with two RJ45 connectors at 10/100 Mbps
  - Supports HTTPS, SNMP, DHCP, Modbus TCP/IP, BACnet/IP
  - Easy remote management through web/ mobile devices
- Easy installation
  - DIN-mounted form factor option for easy, plug-in installation
  - Industry standard Modbus register and BACnet object list
- ASHRAE 90.1 compliant data logging
  - Two (2) GB capacity power and energy data logging in 15-minute increments over a 36 month period
  - Wide CT compatibility: LVCTs (0.333 V and 1 V), and Rogowski Coils (up to 5000 A)
- High reliability
  - IEC 61557-12 standards with capacity to measure up to 600 VAC
- Cybersecurity
  - Adheres to IEC 62443 SL1 requirements
  - California CA 2020
- BTL-certified BACnet communication
  - Conformance based on independent testing

Conformity of standards

- BS/EN/IEC 61557-12:2018/ AMD1:2021
- BS/EN/IEC 61326-1: edition 3
- cULus as per UL 61010-1 edition 3
- BS/EN/IEC 61010-2-30:2017
- CE and UKCA as per IEC/BS 61010-1 edition 3
- CSA 22.2 UL 61010-1:2010/2019
- CSA 22.3 61010-2-030:2017
- BACnet/IP - BTL listed (B-ASC)
- Align with cyber security guidelines as per IEC 62443

EM3570 series

PB124812

EM3570 meter front ISO view

PB124813

Power supply for EM3570 front ISO view

PB124814

NEMA enclosure for EM3570 front ISO view

PowerLogic™ EM3570 series

The PowerLogic™ EM3570 energy meter is the ideal fit for cost management applications. Designed for use in both energy management systems and building management systems, it provides the measurement capabilities needed to allocate energy usage, perform sub-billing, pin-point energy savings, optimize equipment efficiency and utilization, and perform a high level assessment of the power quality of the electrical network.

In a single DIN Rail mount 5 module width unit, with a graphical display, all three phases and neutral can be monitored simultaneously. The bright, anti-glare display features large characters and powerful backlighting for easy reading even in extreme lighting conditions and viewing angles. Ethernet communication port are enriched with cyber security guidelines.

Applications

- Cost management: Cost saving opportunities become clear once you understand how and when your facility uses electricity. The PowerLogic™ EM3570 series meters are ideal for:
  - Sub-billing: Allows a landlord, property management firm, condominium association, homeowners association, or other multi-tenant property to bill tenants for individual measured utility (electricity) usage depending on the local regulations.
  - Cost allocation: Allocate energy costs between different departments (HVAC, indoor and outdoor lighting, refrigeration, etc.), different parts of an industrial process or different cost centres. Cost allocation systems can help you save money by making changes to your operation, better maintaining your equipment, taking advantage of pricing fluctuations, and managing your demand.
- Network management: Improving reliability of the electrical network is key for success in any business. Monitoring values such as voltage levels and power factor will help you to ensure proper operation and maintenance of your electrical network and equipment. PowerLogic™ EM3570 series meters are the perfect tool for:
  - Basic Power Quality monitoring: Power quality phenomena can cause undesirable effects such as heating in transformers, capacitors, motors, generators and misoperation of electronic equipment and protection devices.
  - Min/Max monitoring (with timestamp): Understanding when electrical parameters, such as voltage, current and power demand, reach maximum and minimum values that will give you the insight to correctly maintain your electrical network and assure equipment will not be damaged.
  - Alarming: alarms help you to be aware of any abnormal behaviour on the electrical network in the moment it happens.
  - Data logging: reproduce the data logging mentioned feature section

- Main characteristics
  - Easy to install
    - DIN rail mount, no tools required. Compact meter with 90 mm width, current input through LVCT or Rogowski coil, connectable up to 600 V L-L without voltage transformers for installations compliant with category III.
  - Easy to operate
    - Intuitive navigation with self-guided, selectable menus. Two LEDs on the meter face help the user confirm normal operation with a green LED - heartbeat/communications indicator, and the amber LED - customizable either for alarms or energy pulse outputs. Onboard web pages show real-time and logged information, and verify communications.
  - Easy circuit breaker monitoring and control
    - The EM3570 provides 1 relay output (high performance Form A type) with capability to command most of the circuit breaker coils directly. For Digital Inputs, monitored switches can be wired directly to the meter.
  - Alarms
    - Alarms can be visualized as Active (the ones that have picked up and did not drop out yet) or Historical (the ones that happened in the past). Alarms can be programmed and combined to trigger digital outputs and relay.
    - The EM3570 series keeps an alarm log with the active and historical alarms with date and time stamping. SMTP protocol for receiving alarm conditions via email and text. SNTP protocol for date/time network synchronization.

EM3570 series

PB124815

EM3570 meter rear ISO view

- High Performance and accuracy
  - IEC 61557-12 Performance measuring and monitoring devices (PMD). Defines the performance expectation based on classes. It defines the allowable error in the class for real and reactive power and energy, frequency, current, voltage, power factor, as well as ratings for temperature, relative humidity, altitude, start-up current and safety. It makes compliant meters readings comparable - they will measure the same values when connected to the same load.
- NEMA Enclosure
  - METSEEM3570ENC enclosure offers a mounting option for EM3570 DIN Ethernet Meters with NEMA 4x level protection from the elements. The enclosure is equipped with DIN rail mounting hardware for convenient installation and a swing panel kit for electrical protection.
  - NEMA 4x level protection - weather-proofing and durability
  - Clear front panel - maximum visibility
  - Swing panel kit - clean and pleasing look
- Power Supply
  - The METSEEM3570PS Power Supply provides 24 V DC, 0.3 A output control power to the EM3570 series power and energy meter. The power supply supports the same voltage range as the EM3570 meter.
  - Wide input range: 90 to 600 V AC (600V LL/347V LN) or 125 to 300 V DC

PB124816

Power supply for EM3570 rear ISO view

Native multi-protocol support

The EM3570 series is easy to integrate into new and existing BMS systems. With native BACnet/IP protocol support, meters can simultaneously communicate via BACnet and Modbus in applications where multiple software systems are used (building management and energy management systems).

The EM3570 series has been tested and certified in accordance with BACnet Testing Laboratories (BTL) requirements.

- EM3570 series metering:
  - Power Quality analysis
  - The EM3570 offers Total Demand
- Load management
  - Peak demands with time stamping are provided. Predicted demand values can be used in combination with alarms for basic load shedding applications.
- Alarming with time stamping
  - A different combination of set point and drop point driven alarms from array of 17 different alarm

PB124817

NEMA enclosure for EM3570 rear ISO view

	EM3570 series
Set point driven alarms	17
Custom defined	■

EM3570 series

EM3570 Series Feature Selection

	METSEEM3570	METSEEM3570A	METSEEM3570X	METSEEM3570AX
Installation				
Fast installation, DIN rail mount with integrated display	■	■	■	■
Accuracy				
Class	CL 0.5	CL 0.5	CL 0.5	CL 0.5
Display				
Backlit LCD, multilingual, 4 lines, 4 concurrent values	■	■	■	■
Power and energy metering				
3-ph voltage, current, power, demand, energy, frequency, power factor	■	■	■	■
Multi-tariff	4	4	4	4
I/Os and relays				
Digital inputs	2	2	2	2
Relay output	1	1	1	1
Alarms and control				
Alarms	17	17	17	17
Set point response time, seconds	1	1	1	1
Single and multi-condition alarms	■	■	■	■
Memory for data logging	2 GB	2 GB	2 GB	2 GB
Communications				
Ethernet port with Modbus TCP protocol	■	■	■	■
BACnet/IP protocol	■	■	■	■
Onboard web server with web pages	■	■	■	■

EM3570 Commercial References

Comm. ref numbers	Description
METSEEM3570	DIN Ethernet power meter, LVCT input with external Power Supply module
METSEEM3570A	DIN Ethernet power meter, Rogowski coil input with external Power Supply module
METSEEM3570X	DIN Ethernet power meter, LVCT input without external Power Supply module
METSEEM3570AX	DIN Ethernet power meter, Rogowski coil input without external Power Supply module
METSEEM3570PS	24V DC Power Supply Module for DIN Ethernet meter 600V AC input
METSEEM3570ENC	NEMA enclosure accessory for Din Ethernet meter METSEEM35x Schneider brand

Please contact your Schneider Electric representative for complete ordering information.

EM3570 series

EM3570 Series Technical Specifications

	METSEEM3570	METSEEM3570A	METSEEM3570X	METSEEM3570AX
Use on LV systems	■			
Basic metering with min/max readings	■			
Instantaneous rms values				
Current	■			
Voltage	■			
Frequency	■			
Real, reactive, and apparent power	■			
True Power Factor	Signed, Four Quadrant			
Displacement PF	■			
V L-N, V L-L	■			
Calculated neutral current	■			
Energy values				
Accumulated Active, Reactive and Apparent Energy	Received/Delivered			
Demand value				
Current average	Present, Last, Peak, and Peak Date Time			
Active power	Present, Last, Peak, and Peak Date Time			
Reactive power	Present, Last, Peak, and Peak Date Time			
Apparent power	Present, Last, Peak, and Peak Date Time			
Peak demand with timestamping D/T for current and three powers	■			
Demand calculation method — Sliding, fixed and rolling block	■			
Synchronisation of the measurement window to input, communication command or internal clock	■			
Settable Demand intervals	■			
Other measurements				
I/O timer	■			
Operating timer	■			
Alarm counters and alarm logs	■			
Power quality measurements				
Calculated Neutral current	■			
samples/cycle	32			
Data recording				
Min/max of instantaneous values, plus phase identification (+1)	■			
Alarms with 1s timestamping (+1)	■			
Data logging	2GB memory up to 3 years with 16 parameters in 15 min interval. Flexibility of selecting parameters from 75 different parameters with option of setting the logging interval from 10 s to 32767 s			
Min/max log	■			
Maintenance, alarm and event logs	■			
Customisable data logs	■			
RTC with battery back up	3 years (when meter is in Power OFF condition)			
Display resolution	5 digits for Energy and other parameters with auto scaling			

(+1) Stored in non-volatile memory

EM3570 series

EM3570 Series Technical Specifications (Contd.)

			METSEEM3570	METSEEM3570A	METSEEM3570X	METSEEM3570AX
Inputs / Outputs / Mechanical Relays						
Digital inputs			2	2	2	2
Form A Relay (SPST) output			1	1	1	1
Timestamp resolution in seconds			1	1	1	1
Type of measurement: True rms on three-phase (3P, 3P + N)			■			
			METSEEM3570	METSEEM3570A	METSEEM3570X	METSEEM3570AX
Measurement accuracy	IEC 61557-12		PMD/[SD|SS]/K70/0.5			
	Active Energy		Class 0.5 as per BS/EN/IEC 61557-12			
	Reactive Energy		Class 2.0 as per BS/EN/IEC 61557-12			
	Active Power		Class 0.5 as per BS/EN/IEC 61557-12			
	Apparent Power		Class 0.5 as per BS/EN/IEC 61557-12			
	Reactive Power		Class 2.0 as per BS/EN/IEC 61557-12			
	Current, Phase		Class 0.5 as per BS/EN/IEC 61557-12			
	Voltage, L-N		Class 0.5 as per BS/EN/IEC 61557-12			
	Frequency		Class 0.5 as per BS/EN/IEC 61557-12			
	Power Factor		Class 0.5 as per IEC 61557-12/±0.005 count			
	Calculated neutral current		Class 0.5 as per IEC 61557-12			
Input-voltage (up to 1.0 MV AC max, with voltage transformer)	Nominal Measured Voltage range		90 V L-N/156 V L-L to 347 V L-N/600 V L-L			
	Impedance		5 MΩ			
	Frequency nominal		50 Hz/60 Hz ± 10%			
Input-current (configurable for 0.333 V or 1 V secondary CTs)	I nominal		0.333 V (0.4 V max) or 1 V nominal (1.1 V max)			
	Measured Amps with over range		0.00333...0.4 V			
	Frequency nominal		50 Hz/60 Hz ± 10%			
DC control power	Operating range		12...36 V DC ±20 %			
	Burden		< 5 W			
Outputs	Relay outputs	Max output frequency	0.5 Hz maximum (1 s ON/1 s OFF - min times)			
		Switching current, at resistive load	5 A @250 V AC and 5 A @30 V DC			
		Isolation	2.5 kV rms			
Status Inputs	ON Voltage		11...40 V DC			
	OFF Voltage		0...5 V DC			
	Minimum pulse width		10 ms			
	Opto Isolation		3.75 kV rms			
Mechanical characteristics						
IP degree of protection (IEC 60529)			IP40 front display, IP20 body			
Dimensions W x H x D	Meter		90 x 91.4 x 70.6 mm			
	Power Supply (optional)		36 x 91.4 x 67.6 mm			
	NEMA enclosure (optional approx.)		271 x 277 x 135 mm			
Mounting position			Meter and power supply - Vertical DIN rail mount NEMA enclosure (optional) - Projection type			

EM3570 series

EM3570 Series Technical Specifications (Contd.)

		METSEEM3570	METSEEM3570A	METSEEM3570X	METSEEM3570AX
Environmental characteristics					
Operating temperature	Operating temperature	-25...70 °C			
	Display (reduced display performance at -25 ºC)	-25...70 °C			
Storage temperature		-40...85 °C			
Humidity range		5...95 % RH at 50 °C (non-condensing)			
Pollution degree		2			
Altitude		≤ 3000 m (9842 ft) above sea level			
Mission profile / Life span		15 years, 45 °C (113 °F) 60% RH, refer Mission Profile document			
Protective treatment		Conformal coating			
Safety					
Europe		CE/UKCA as per BS/EN/IEC 61557-12, BS/EN/IEC 61326-1, BS/EN/IEC 61010-1, BS/EN/IEC 61010-2-30			
U.S. and Canada		UL/EN 61010-1, UL/EN 61010-2-030			
Measurement category (Voltage & Current inputs)		CAT III up to 400 V L-N/690 V L-L			
Dielectric		As per IEC/UL 61010-1 (Edition 3)			
Protective Class		II, Double insulated for user accessible parts			
Communication					
Ethernet Port speed		100 Mbps = Green/10 Mbps = Off			
Protocol		BACnet/ IP and Ethernet TCP/IP			
FTPS		Yes			
SNMP, SNTP		Yes			
HTTPS		Yes			
Firmware and language file update		Yes			
Isolation		2.5 kV rms, double insulated			
Human machine interface					
Display type		Monochrome Graphics LCD			
Resolution		126 x 94 pixels			
Backlight		White LED			
Keypad		4-button			
Indicator Heartbeat / Communication activity		Green LED			
Energy pulse output / Active alarm (configurable)		Orange LED			
Wavelength		590...635 Nm			
Maximum pulse rate		2.5 kHz			

EM3570 series

Note: The dimensions are in mm (in).

EM3570 Meter Dimensions

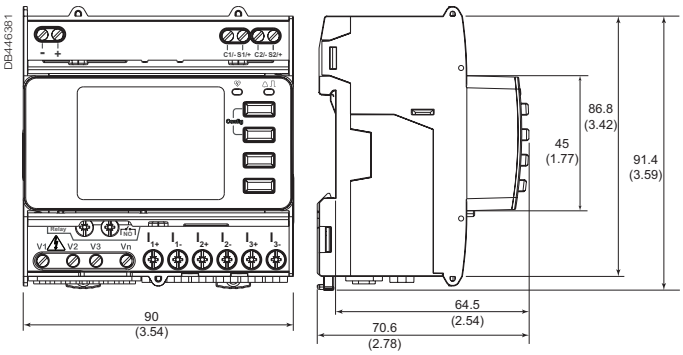

EM3570 Power Supply Dimensions

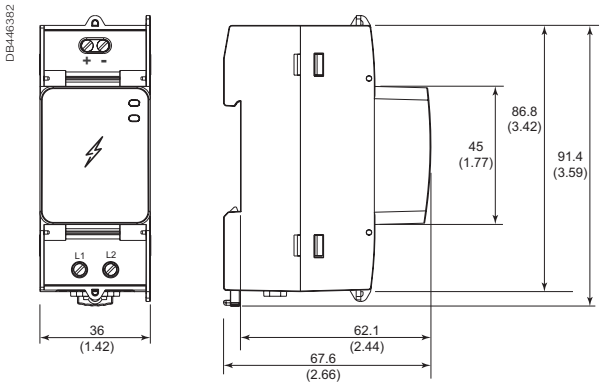

EM3570 Enclosure Dimensions

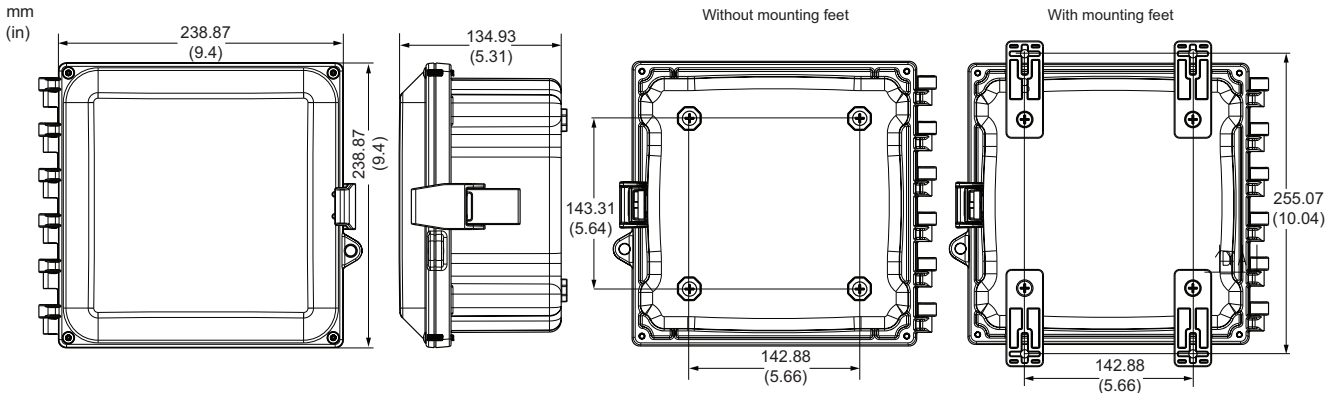

EM3570 series

EM3570 Meter Mounting

DB446383

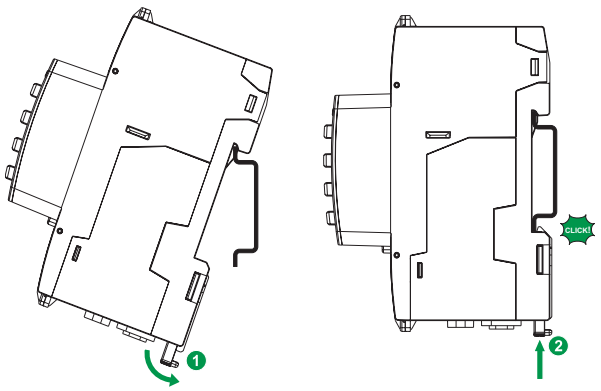

EM3570 Power Supply Mounting

DB446384

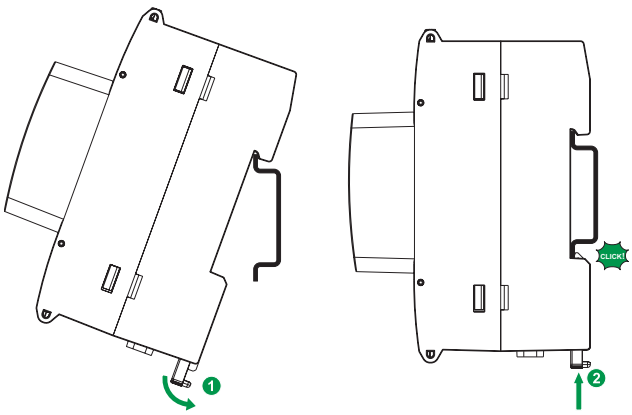

EM3570 Power Supply Description

DB446385

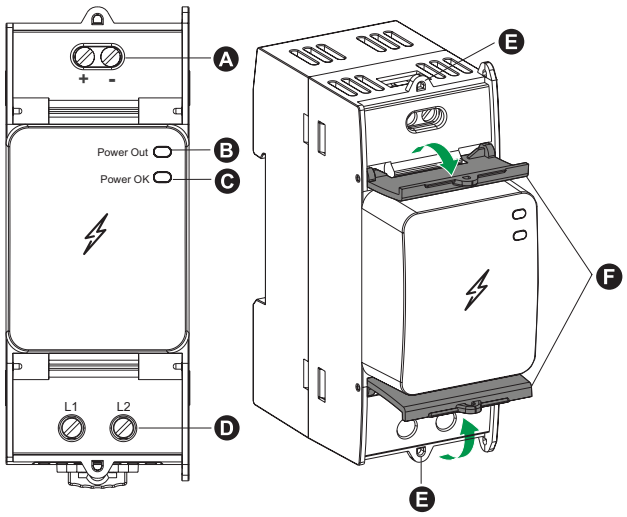

- A 24 V DC Output (+,-)
- B Power Out status LEDED
- C Power OK status LED
- D Input L1, L2
- E Sealing points
- F Sealable covers

EM3570 series

EM3570 Meter Description

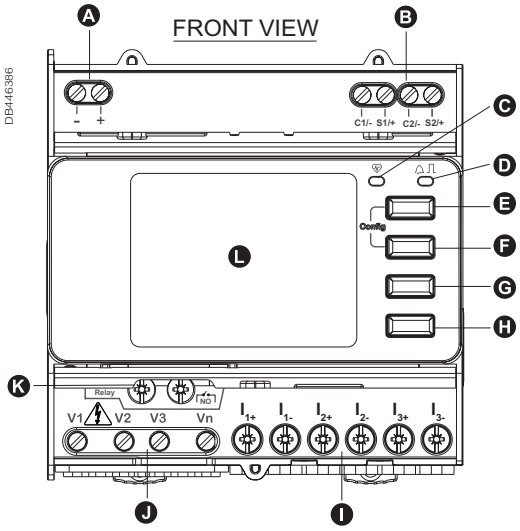

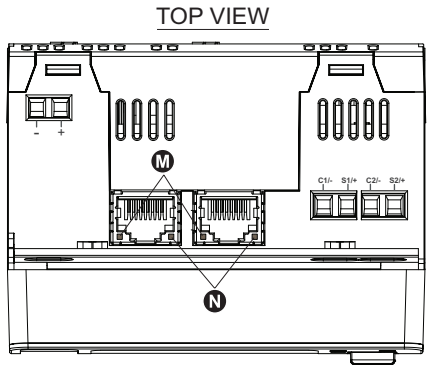

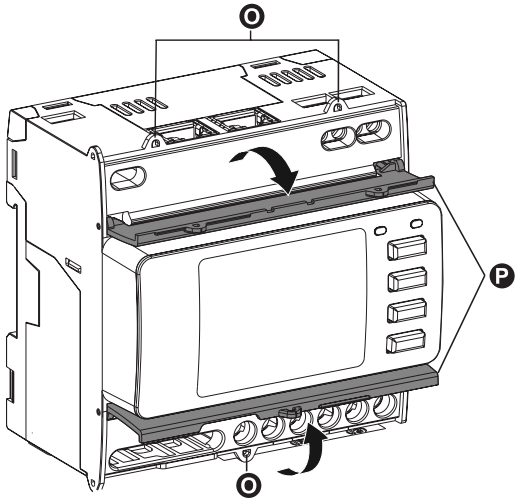

- A Control power input 24 V DC (-,+)
- B Status inputs (C1/-, S1/+, C2/-, S2/+)
- C Operation LED (Green)
- D Alarm / Energy pulse LED (Orange)
- E Cancellation button
- F Confirmation button
- G Up button
- H Down button
- I Current inputs (I_{1+}, I_{1-}, I_{2+}, I_{2-}, I_{3+}, I_{3-})
- J Voltage inputs (V1, V2, V3, Vn)
- K Relay output (NO (⌐✓•¬))
- L Display with white backlight
- M Ethernet port link/Activity LED (Green)
- N Ethernet port Speed LED (Green) (100 Mbps=Green / 10 Mbps=Off)
- O Three sealing points
- P Two sealable covers

PM3000 series

The PowerLogic™ PM3000 series power meters are a cost-attractive, feature-rich range of DIN rail-mounted power meters that offers all the measurement capabilities required to monitor an electrical installation.

Ideal for power metering and network monitoring applications that seek to improve the availability and reliability of your electrical distribution system, the meters are also fully capable of supporting sub-metering and cost allocation applications.

Applications

Cost management applications

- Bill checking to verify that you are only charged for the energy you use
- Aggregation of energy consumption, including WAGES, and cost allocation per area, per usage, per shift or per time within the same facility
- Energy cost and usage analysis per zone, per usage or per time period to optimise energy usage

Network management applications

- Metering of electrical parameters to better understand the behaviour of your electrical distribution system

PM3200

PM3250

The solution for

All markets that can benefit from a solution that includes PowerLogic™ PM3000 series meters:

- Buildings
- Industry
- Data centres and networks
- Infrastructure (e.g. airports, road tunnels, telecom)

Benefits

Optimise your energy consumption & enable energy efficiency practices

- Collect and analyse energy consumption data from each area for each type of load or circuit
- Gain an accurate understanding of business expenses by allocating the energy-related costs
- Identify savings opportunities
- Use information to implement actions designed to reduce energy consumption

Competitive advantages

Connectivity advantages

- Programmable digital input
  - External tariff control signal (4 tariff)
  - Remote reset partial counter
  - External status like breaker status
  - Collect WAGES pulses
- Programmable digital output
  - Alarm (PM3255)
  - KWh pulses
- Graphic LCD display
- Modbus RS-485 with screw terminals

Multi-tariff capability

The PM3000 series allows users to arrange KWh consumption in four different registers. This can be controlled by:

- Digital inputs. Signal can be provided by PLC or utilities
- Internal clock programmable by HMI
- Through communication

This function allows users to:

- Make tenant metering for dual source applications to differentiate backup source or utility source
- Understand well the consumption during peak time and off-peak time, weekdays and weekends, holiday and working days etc.
- Follow up feeders consumption in line with utility tariff rates

Power management solutions

Schneider Electric provides innovative power management solutions to increase your energy efficiency and cost savings, maximise electrical network reliability and availability, and optimise electrical asset performance.

Conformity of standards

- IEC 61557-12
- IEC 61326-1
- IEC 62052-11
- IEC 62053-21
- IEC 62053-22
- IEC 62053-23
- EN 50470-1
- EN 50470-3
- IEC 61010-1
- EN 55022

PM3000 series

PM3000 series feature selection

	PM3200	PM3210	PM3250	PM3255
Performance standard				
IEC61557-12 PMD/Sx/K55/0.5	■	■	■	■
General				
Use on LV and HV systems	■	■	■	■
Number of samples per cycle	32	32	32	32
CT input 1A/5A	■	■	■	■
VT input	■	■	■	■
Multi-tariff	4	4	4	4
Multi-lingual backlit display	■	■	■	■
Instantaneous rms values				
Current, voltage Per phase and average	■	■	■	■
Active, reactive, apparent power Total and per phase	■	■	■	■
Power factor Total and per phase	■	■	■	■
Energy values				
Active, reactive and apparent energy; import and export	■	■	■	■
Demand value				
Current, power (active, reactive, apparent) demand; present	■	■	■	■
Current, power (active, reactive, apparent) demand; peak		■	■	■
Power quality measurements				
THD Current and voltage		■	■	■
Data recording				
Min/max of the instantaneous values	■	■	■	■
Power demand logs				■
Energy consumption log (day, week, month)				■
Alarms with timestamping		5	5	15
Digital inputs/digital outputs		0/1		2/2
Communication				
RS-485 port			■	■
Modbus protocol			■	■
Commercial reference number	METSEPM3200	METSEPM3210	METSEPM3250	METSEPM3255

See your Schneider Electric representative for complete ordering information.

PM3000 series

PowerLogic™ PM3200 front view

PowerLogic™ PM3250 front view

PM3000 technical specifications

Type of measurement	True rms up to the 15th harmonic on three-phase (3P,3P+N) and single-phase AC systems. 32 samples per cycle
Measurement accuracy	
Current with x/5A CTs	0.3 % from 0.5 A to 6 A
Current with x/1A CTs	0.5 % from 0.1 A to 1.2 A
Voltage	0.3 % from 50 V to 330 V (Ph-N), from 80 V to 570 V (Ph-Ph)
Power factor	±0.005 from 0.5 A to 6 A with x/5 A CTs; from 0.1A to 1.2 A with x/1 A CTs and from 0.5 L to 0.8 C
Active/Apparent Power with x/5A CTs	Class 0.5
Active/Apparent Power with x/1A CTs	Class 1
Reactive power	Class 2
Frequency	0.05 % from 45 to 65 Hz
Active energy with x/5A CTs	IEC 62053-22 Class 0.5s
Active energy with x/1A CTs	IEC 62053-21 Class 1
Reactive energy	IEC 62053-23 Class 2
Data update rate	
Update rate	1s
Input-voltage characteristics	
Measured voltage	50 V to 330 V AC (direct / VT secondary Ph-N) 80 V to 570 V AC (direct / VT secondary Ph-Ph) up to 1 MV AC (with external VT)
Frequency range	45 Hz to 65 Hz
Input-current characteristics	
CT primary	Adjustable from 1 A to 32767 A
CT secondary	1 A or 5 A
Measurement input range with x/5A CTs	0.05 A to 6 A
Measurement input range with x/1A CTs	0.02 A to 1.2 A
Permissible overload	10 A continuous, 20 A for 10s/hour
Control Power	
AC	100/173 to 277/480 V AC (+/-20%), 3 W/5 VA; 45 Hz to 65 Hz
DC	100 to 300 V DC, 3 W
Input	
Digital inputs (PM3255)	11 to 40 V DC, 24 V DC nominal, <=4mA maximum burden, 3.5kVrms insulation
Output	
Digital output (PM3210)	Optocoupler, polarity sensitive, 5 to 30 V, 15 mA max, 3.5kVrms insulation
Digital outputs (PM3255)	Solid state relay, polarity insensitive, 5 to 40 V, 50 mA max, 50 Ω max, 3.5kVrms insulation

PM3000 series

PM3000 technical specifications

Mechanical characteristics	
Weight	0.26 kg
IP degree of protection (IEC 60529)	IP40 front panel, IP20 meter body
Dimension	90 x 95 x 70 mm
Environmental conditions	
Operating temperature	-25 °C to 55 °C
Storage temperature	-40 °C to 85 °C
Humidity rating	5 to 95% RH at 50 °C (non-condensing)
Pollution degree	2
Metering category	III, for distribution systems up to 277/480 V AC
Dielectric withstand	As per IEC61010-1, Doubled insulated front panel display
Altitude	3000 m max
Electromagnetic compatibility	
Electrostatic discharge	Level IV (IEC 61000-4-2)
Immunity to radiated fields	Level III (IEC 61000-4-3)
Immunity to fast transients	Level IV (IEC 61000-4-4)
Immunity to surge	Level IV (IEC 61000-4-5)
Conducted immunity	Level III (IEC 61000-4-6)
Immunity to power frequency magnetic fields	0.5mT (IEC 61000-4-8)
Conducted and radiated emissions	Class B (EN 55022)
Safety	
	CE as per IEC 61010-1★
Communication	
RS-485 port	Half duplex, from 9600 up to 38400 baud, Modbus RTU (double insulation)
Display characteristics	
Dimensions (VA)	43 mm x 34.6 mm
Display resolution	128 x 96 dots
Standard compliance	
	IEC 61557-12, EN 61557-12 IEC 61010-1, UL 61010-1 IEC 62052-11, IEC 62053-21, IEC 62053-22, IEC 62053-23 EN 50470-1, EN 50470-3

★ *Protected throughout by double insulation*

PM3000 dimensions

PM3200/PM3210 dimensions

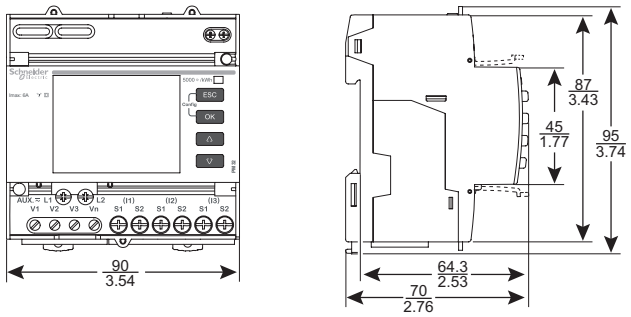

PM3250/PM3255 dimensions

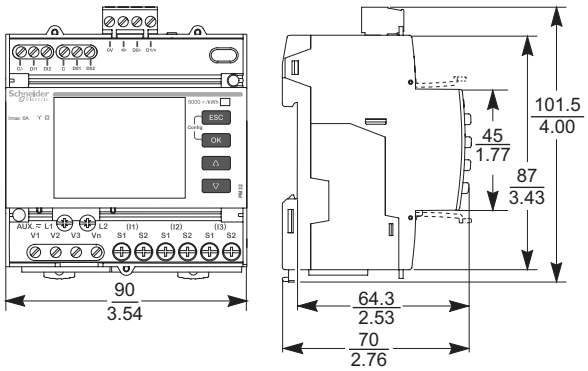

PM3200/PM3210 mounting

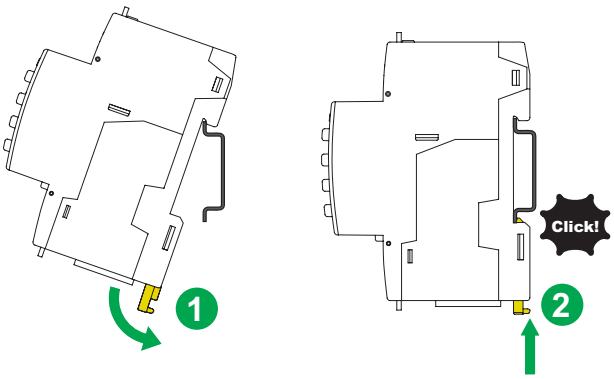

PM3250/PM3255 mounting

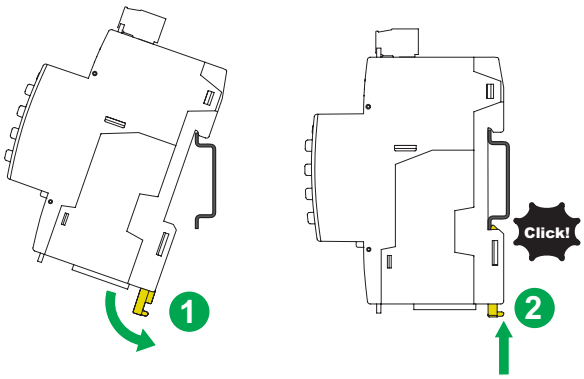

PM3200/PM3210 overview

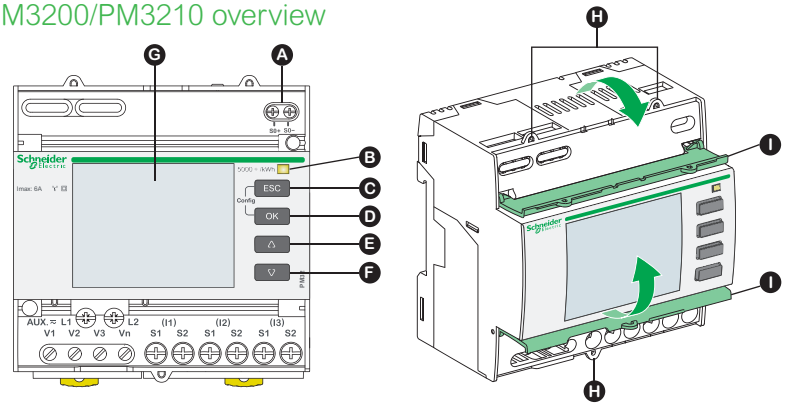

- A Pulse output for remote transfer (PM3210)
- B Energy pulse LED (5000 / kWh)
- C Cancellation
- D Confirmation
- E Up
- F Down
- G Display with white backlight
- H Sealing points
- I Sealable covers

PM3250/PM3255 overview

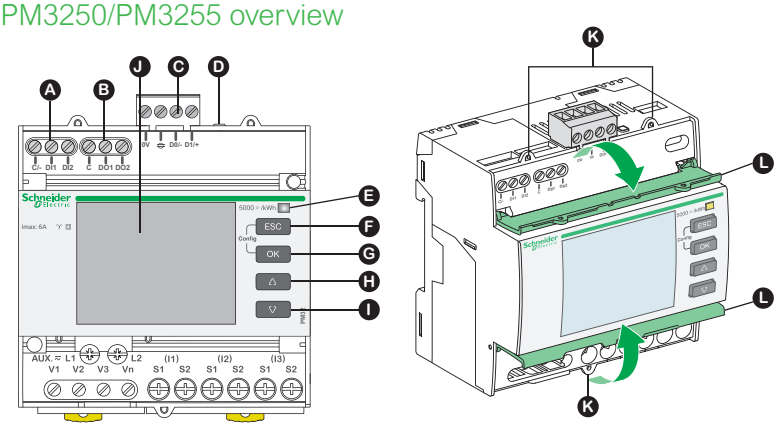

- A Digital inputs x 2 (PM3255)
- B Digital outputs x 2 (PM3255)
- C Communications port
- D Communications LED
- E Energy pulse LED (5000 / kWh)
- F Cancellation
- G Confirmation
- H Up
- I Down
- J Display with white backlight
- K Sealing points
- L Sealable covers

Please see the appropriate ***Installation Guide*** for accurate and complete information on the installation of this product.

PowerLogic™ PowerTag Energy series

PowerTag Energy is a wireless-communication energy sensor.

PowerTag Energy is designed specifically for Energy Management, Load Monitoring and Power Availability applications. Associated to a concentrator or a gateway, PowerTag Energy provides a full wireless class 1 solution to monitor energy at any level of a distribution panel.

Applications:

- Monitors your electrical installation from main incomer down to load level
- Suitable for various businesses, buildings, industrial and residential applications with easy integration in upper systems
- Supports and enables Energy Efficiency programs and standards such as:
  - European Energy Efficiency Directive (EED)
  - Energy Performance of Buildings Directive (EPBD)
  - IEC 60364-8-1 “Low Voltage Electrical installations - Energy Efficiency”
  - EN 17267 “Energy Measurement and Monitoring plan”
  - ISO 50001 “Energy Management System”

A9MEM1570

PowerTag Energy
Flex 63 A (F63)

A9MEM1571

PowerTag Energy
PhaseNeutral 63 A (P63)

LV434020

PowerTag Energy Monoconnect 250 A (M250)

A9MEM1590

PowerTag Energy Rope 2000 A (R2000)

A9MEM1580

PowerTag Energy Flex 160 A (F160)

A9MEM1521

PowerTag Energy
Monoconnect 63 A (M63)

PowerTag Energy

The solution for

Markets that benefit from a solution that includes PowerLogic™ PowerTag Energy series:

- Residential
- Small business
- Medium & large buildings
- Industrial sites

Benefits

PowerTag Energy sensor incorporates all features required to perform accurate real-time measurements (U, V, I, P, PF) and energy values up to 2000 A.

Different designs of PowerTag Energy are available to ensure it fits the protective device on which it is mounted.

- PowerTag Energy Monoconnect (M): can be mounted directly on the device, no additional wiring is required
- PowerTag Energy PhaseNeutral (P): for DIN offers with 9 mm pitch between phase and neutral
- PowerTag Energy Flex (F): can be mounted on a wide range of protective devices thanks to its design
- PowerTag Energy Rope (R) thanks to its openable current sensors can be easily installed on busbars or wires in new installations and in retrofit applications

PowerTag Energy sensor is acting as an autonomous meter. Energy counters are stored inside PowerTag Energy sensor.

Energy management system

To get the most effective use from your Schneider Electric measurement and metering devices, we offer a range of dedicated gateways / concentrators depending on your application.

Advantages

- Wireless-communication
- Range up to 2000 A
- Voltage loss alarming
- Class 1 accuracy
- Compact design
- Easy installation and commissioning
- Scalable solution
- Perfect for retrofit or new panels

Conformity of standards

- IEC 61557-12
- IEC 61010-1
- IEC 61010-2-030
- IEC 61326-1 (Industrial Environment)
- IEC 62311
- ETSI EN 300 328
- ETSI EN 301 487-1
- ETSI EN 301 489-17 (Radiated EMC)

Feature selection

	A9MEM15••	A9MEM15••	A9MEM15••	A9MEM1580	LV434020/LV434021
Product name	M63	P63	F63	F160	M250
Max current (I Max) A	63	63	63	160	250
Starting current (Ist)	40 mA	40 mA	40 mA	100 mA	160 mA
Design	Monoconnect	PhaseNeutral	Flex	Flex	Monoconnect
Mounting type	On device	On device	On wires	On wires	On device
Current sensors type	Solid core	Solid core	Solid core	Solid core	Solid core
Poles	1P + W / 1P+N / 3P / 3P+N	1P+N / 3P+N	1P+N / 3P / 3P+N	3P / 3P+N	3P / 3P+N
Self-powered	■	■	■	■	■
Voltage (L-N)	Depends on ref	200 - 240 V AC	Depends on ref	100 - 277 V AC	230 V AC
Measurements*					
Nb quadrant	2	2	2	4	4
Active Energy	Class 1	Class 1	Class 1	Class 1	Class 1
Reactive Energy				■	■
Apparent Energy				■	
Active Power	■	■	■	■	■
Reactive Power				■	■
Apparent Power	■	■	■	■	■
Power Factor	■	■	■	■	■
Frequency				■	■
Current and Voltage	■	■	■	■	■

* Data availability depending on the concentrator / gateway

	LV434022/LV434023	A9MEM1590	A9MEM1591	A9MEM1592	A9MEM1593
Product name	M630	R200	R600	R1000	R2000
Max current (I Max) A	630	200	600	1000	2000
Starting current (Ist)	400 mA	120 mA	400 mA	600 mA	1.2 A
Design	Monoconnect	Rope	Rope	Rope	Rope
Mounting type	On device	On wires	On wires	On wires	On wires
Current sensors type	Solid core	Split core	Split core	Split core	Split core
Poles	3P / 3P+N	3P / 3P+N	3P / 3P+N	3P / 3P+N	3P / 3P+N
Self-powered	■	■	■	■	■
Voltage (L-N)	230 V AC	100 - 277 V AC	100 - 277 V AC	100 - 277 V AC	100 - 277 V AC
Measurements*					
Nb quadrant	4	4	4	4	4
Active Energy	Class 1	Class 1	Class 1	Class 1	Class 1
Reactive Energy	■	■	■	■	■
Apparent Energy		■	■	■	■
Active Power	■	■	■	■	■
Reactive Power	■	■	■	■	■
Apparent Power	■	■	■	■	■
Power Factor	■	■	■	■	■
Frequency	■	■	■	■	■
Current and Voltage	■	■	■	■	■

* Data availability depending on the concentrator / gateway

Connection possibilities

1 PowerTag Energy Connected Upstream (U and I)

■ When breaker is OFF, PowerTag Energy remains energized.

■ When breaker is OFF, PowerTag Energy is de-energized. PowerTag Energy sends Voltage loss alarm before complete stop.

2 PowerTag Energy Connected Downstream (U and I)

3 PowerTag Energy Connected Downstream (U and I)

■ When breaker is OFF, PowerTag Energy is de-energized. PowerTag Energy sends Voltage loss alarm before complete stop.

■ When breaker is OFF, PowerTag Energy remains energized.

4 PowerTag Energy Connected Upstream (U and I)

Note:
- In association with a contactor, a Variable Speed Drive or a motor starter: PowerTag Energy can ONLY be installed UPSTREAM these devices.
- Some PowerTag Energy can be installed either on the TOP or on the BOTTOM of the protective devices.
- Check the possible mounting position as indicated in the “Catalog numbers” chapter.

Connection (Voltage and Current)		Features
Upstream	1 4	• Energy management: consumption in kWh • Load monitoring: real-time measurements
Downstream Preferred installation to take full benefit of voltage loss alarming in diagnosing the load	2 3	• Energy management: consumption in kWh • Load monitoring: real-time measurements • Power availability: voltage loss alarming

Main associated concentrators / gateways (*)

For Commercial & Building applications		
PowerTag Link	EcoStruxure™ Panel Server	Wireless Panel Server for PrismaSeT Active
A9XMWD20	PAS600●	

For Small Business applications	For Residential applications	For Industrial applications
PowerTag Link C PowerTag Link C+	Wiser IP Module Wiser IP Module+	Harmony Hub
A9XELC10	EER31800	ZBRN1, ZBRN2, ZBRN32

(*) Refer to Selection Guide for complete compatibility pages 95 to 105.

PowerLogic™ PowerTag Energy 63 A

IEC 61557-12 PMD-I/DD/K55/1

As per the above standard:

With its compact design and innovative concept, PowerTag Energy 63 A fits directly on the protective device and as a result has no impact on DIN rail occupancy and switchboard size.
It is therefore well adapted to be mounted from head of group down to final circuits.
Since voltage and current are measured directly at the same point on the circuit to be monitored, it provides accurate measurement and relevant information such as voltage loss.
PowerTag Energy is compatible with SE product ranges as per the selection guide CA908058.

Main characteristics

PowerTag Energy measures the following values in accordance with the IEC 61557-12 standard PMD-I/DD/K55/1:

- Energy:
  - Active energy (kWh): total and partial, delivered and received.
- Real-time measurement values:
  - Voltages (V): phase-to-phase and phase-to-neutral.
  - Currents (A): per phase.
  - Power:
    - Active power (W): total and per phase.
    - Apparent power (VA): total.
  - Power factor.
- Voltage loss alarms:
  - PowerTag Energy sends a “voltage loss” alarm and the current-per-phase value before being de-energized.
  - At “voltage loss”, PowerTag Energy adds an overload alarm if the current is higher than the rated current of the associated protective device.

Note: Functions listed above depends on Concentrator/Gateway.

PowerTag Energy
Monoconnect 63 A (M63)

PowerTag Energy
PhaseNeutral 63 A (P63)

PowerTag Energy
Flex 63 A (F63)

Product selection

Neutral position

Some references of PowerTag Energy 63 A (Monoconnect and PhaseNeutral) exist in Top or Bottom version.
This is linked to the position of the neutral of the PowerTag Energy.

PowerTag Energy "Top"

- Designed to be mounted on the Top of the circuit breaker.

- Designed to be mounted on the Bottom of the circuit breaker.

PowerTag Energy "Bottom"

Note:
- Some PowerTag Energy can be installed either on the TOP or on the BOTTOM of the protective devices.
- Check the possible mounting position as indicated in the "Catalog numbers" chapter.
- In association with a contactor, a Variable Speed Drive or a motor starter: PowerTag Energy can ONLY be installed UPSTREAM these devices.

Number of poles

Choose the PowerTag Energy according to the number of poles of the protective device: one PowerTag Energy per protective device.

Ex.: 3 Pole PowerTag Energy 63 A for a 3 pole CB.

PowerLogic™ PowerTag Energy 63 A

Technical specifications

Main characteristics				
Rated voltage	1P+N / 1P+W	Un	Phase-to-neutral	200… 240 V AC ± 20 %
	3P	Un	Phase-to-phase	380… 415 V AC ± 20 %
	3P+N	Un	Phase-to-neutral	220… 240 V AC ± 20 %
			Phase-to-phase	380… 415 V AC ± 20 %
	A9MEM1543	Un	Phase-to-phase	200… 240 V AC ± 20 %
	A9MEM1564	Un	Phase-to-neutral	100… 127 V AC ± 20 %
	A9MEM1574	Un	Phase-to-neutral	120… 137 V AC ± 20 %
			Phase-to-phase	208… 240 V AC ± 20 %
Frequency				50/60 Hz
Maximum current		Imax		63 A
Basic current		Ib		10 A
Saturation current				130 A
Maximum consumption			1P+N	≤ 1 VA
			3P/3P+N	≤ 2 VA
Starting current		Ist		40 mA
Additional characteristics				
Operating temperature				-25°C to +60°C
Storage temperature				-40°C to +85°C
Overvoltage category			As per IEC 61010-1	Cat. III
Measuring category			As per IEC 61010-2-030	Cat. III
Pollution degree				3
Altitude				≤ 2000 m
Degree of protection			Device only	IP20
			IK	05
Radio-frequency communication				
ISM band 2.4 GHz				2.4 GHz to 2.4835 GHz
Channels			As per IEEE 802.15.4	11 to 26
Isotropic Radiated Power			Equivalent (EIRP)	0 dBm
Maximum transmission time				< 5 ms
Channel occupancy			Messages sent every	5 seconds minimum
Characteristics of measuring functions				
Function		Symbol	Performance category as per IEC 61557-12 (PMD-I/DD/K55/1)	Device measuring range
			Class	
Active power		P	1	9 W to 63 kW
Active energy		Ea	1	Total and partial 0 to 99999999.9 kWh
Current		I	1	40 mA to 63 A
Voltage		U	0.5	Un ± 20 %
Power factor		PFA	1	0 to 1

PowerLogic™ PowerTag Energy 63 A

A9MEM1520

A9MEM1521

A9MEM1540

A9MEM1522

A9MEM1543

A9MEM1541

A9MEM1542

PowerTag Energy Monoconnect 63 A Commercial reference numbers

PowerTag Energy for Acti9 and Multi9 **Monoconnect** offers: «Single-terminal» circuit breakers, RCDs and switches with **18 mm pitch between phase and neutral**, rating less than or equal to 63 A.

Commercial reference number	Type	Mounting	Description
A9MEM1520	1P+wire	Top or bottom	PowerTag Energy M63 1PW
A9MEM1521	1P+N	Top	PowerTag Energy M63 1PN T
A9MEM1522		Bottom	PowerTag Energy M63 1PN B
A9MEM1540	3P	Top or bottom	PowerTag Energy M63 3P
A9MEM1543			PowerTag Energy M63 3P 230V LL
A9MEM1541	3P+N	Top	PowerTag Energy M63 3PN T
A9MEM1542		Bottom	PowerTag Energy M63 3PN B

Designed to fit the following devices: iC60, Reflex iC60, DT60, iID.
Check the Concentrators /Gateways compatibility and the list of Schneider Electric compatible devices with the Selection Guide pages 95 to 105.

A9MEM1561

A9MEM1562

A9MEM1563

A9MEM1571

A9MEM1572

PowerTag Energy PhaseNeutral 63 A Commercial reference numbers

PowerTag Energy for Acti9 and Multi9 **PhaseNeutral** offers: «Single-terminal» circuit breakers, RCDs and switches at **pitch of 9 mm between phase and neutral**, rating less than or equal to 63 A.

Commercial reference number	Type	Mounting	Description
A9MEM1561	1P+N	Top	PowerTag Energy P63 1PN T
A9MEM1562	1P+N	Bottom	PowerTag Energy P63 1PN B
A9MEM1563	1P+N RCBO	Bottom	PowerTag Energy P63 1PN B RCBO 18mm
A9MEM1571	3P+N	Top	PowerTag Energy P63 3PN T
A9MEM1572	3P+N	Bottom	PowerTag Energy P63 3PN B

Designed to fit the following devices: DT40, iDPN, C40, i DPN Vigi.
Check the Concentrators /Gateways compatibility and the list of Schneider Electric compatible devices with the Selection Guide pages 95 to 105.

A9MEM1560

A9MEM1564

A9MEM1573

A9MEM1570

A9MEM1574

PowerTag Energy Flex 63 A Commercial reference numbers

PowerTag Energy **Flex** for other devices and specific installations, rating less than or equal to 63 A.

Commercial reference number	Type	Mounting	Description
A9MEM1560	1P+N	Top or bottom	PowerTag Energy F63 1PN
A9MEM1564	1P+N	Top or bottom	PowerTag Energy F63 1PN 110V
A9MEM1573	3P	Top or bottom	PowerTag Energy F63 3P
A9MEM1570	3P+N	Top or bottom	PowerTag Energy F63 3PN
A9MEM1574	3P+N	Top or bottom	PowerTag Energy F63 3PN 127/220V

Designed to fit the following devices: Vigi iDT40, Vigi iC40, Vigi iC60, iC60 double terminal, iID double terminal.
Check the Concentrators /Gateways compatibility and the list of Schneider Electric compatible devices with the Selection Guide pages 95 to 105.

Contact your Schneider Electric representative for complete ordering information.

PowerTag Energy Monoconnect 63 A connection

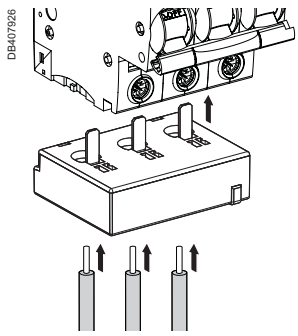

Stripping length	Copper cables					
	Rigid		Flexible		Flexible with ferrule	
	DB122945	DB112804	DB123553	DB112805	DB123554	DB123008
18 mm	1.5 to 16 mm² AWG: 16...6	2 x 1.5 to 2.5 mm² AWG: 16...14	1.5 to 16 mm² AWG: 16...6	2 x 1.5 to 2.5 mm² AWG: 16...14	1.5 to 16 mm² AWG: 16...6	2 x 1.5 to 2.5 mm² AWG: 16...14

Mounting with 18 mm ferrule recommended.

PowerTag Energy Monoconnect 63 A dimensions (mm)

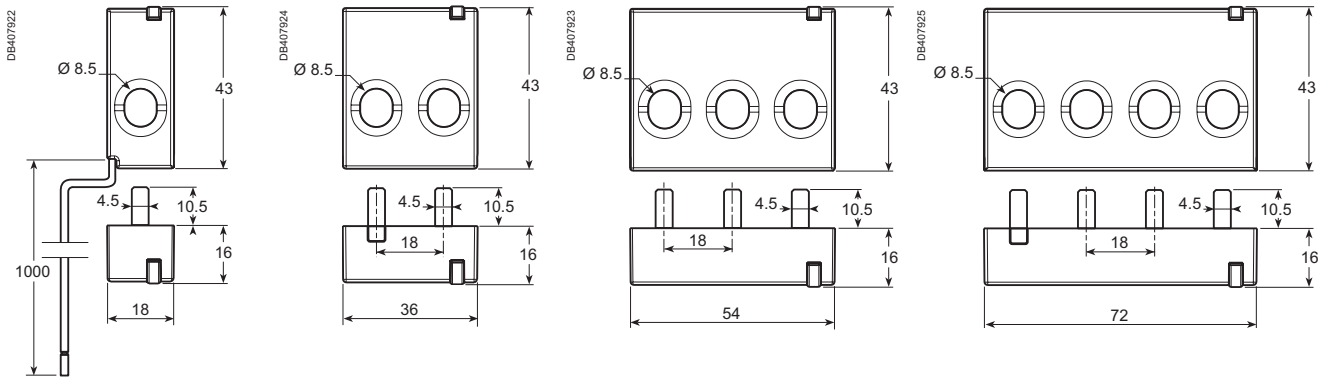

1P+wire 1P+N 3P 3P+N

PowerTag Energy Monoconnect 63 A weight

Type	Weight (g)
1P+wire	16.4
1P+N	17.5
3P	28
3P+N	35

Please refer to PowerTag Energy 63 A Installation Sheet for accurate and complete information on the installation of this product.

PowerTag Energy PhaseNeutral 63 A connection

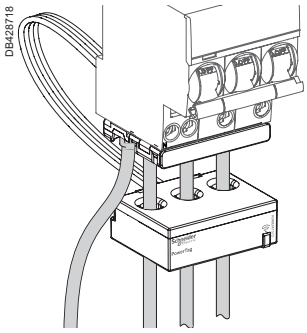

Copper cables					
Rigid		Flexible		Flexible with ferrule	
1.5 to 16 mm² AWG: 16...6	2 x 1.5 to 2.5 mm² AWG: 16...14	1.5 to 16 mm² AWG: 16...6	2 x 1.5 to 2.5 mm² AWG: 16...14	1.5 to 16 mm² AWG: 16...6	2 x 1.5 to 2.5 mm² AWG: 16...14

Stripping length: respect the stripping length stated on the device the PowerTag Energy is associated with.

PowerTag Energy PhaseNeutral 63 A dimensions (mm)

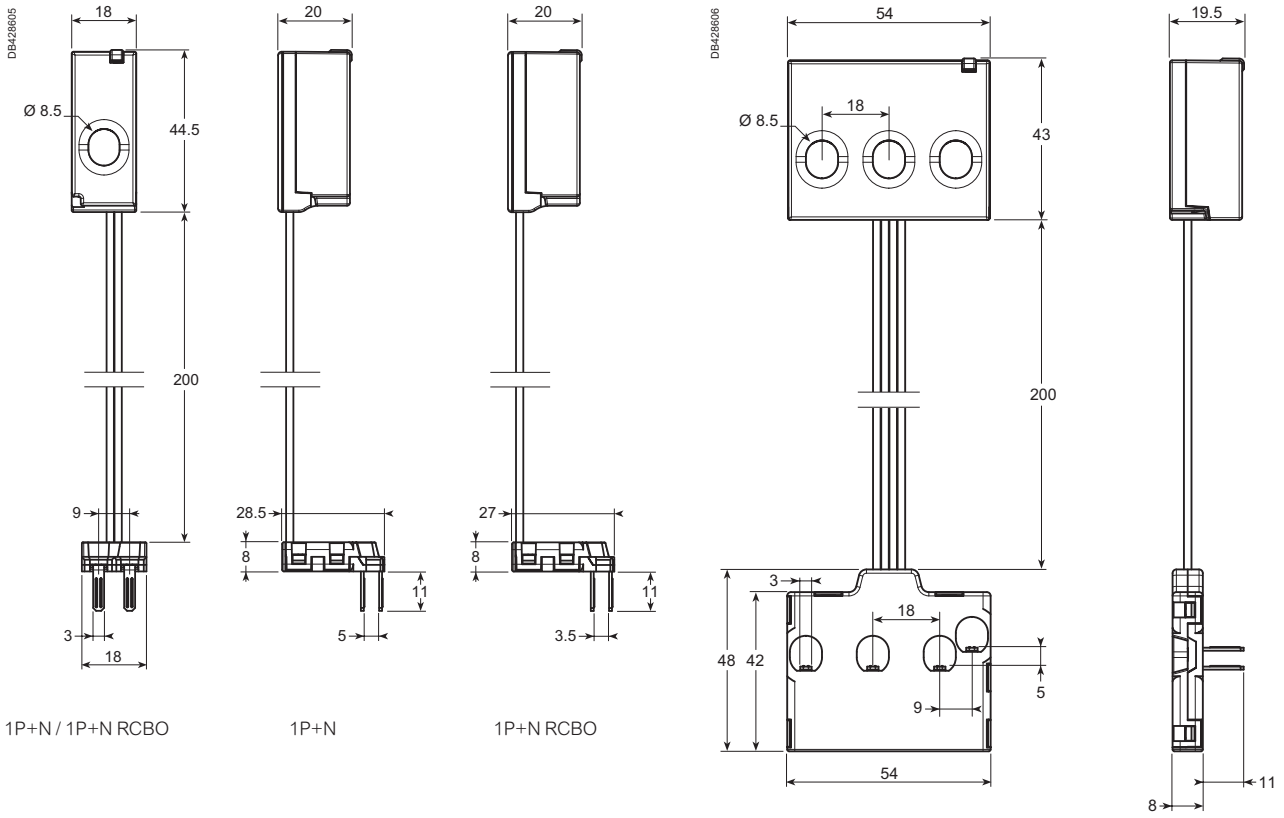

1P+N / 1P+N RCBO

1P+N

1P+N RCBO

3P+N

PowerTag Energy PhaseNeutral 63 A weight

Type	Weight (g)
1P+N	18
3P+N	48

Please refer to PowerTag Energy 63 A Installation Sheet for accurate and complete information on the installation of this product.

PowerTag Energy Flex 63 A connection

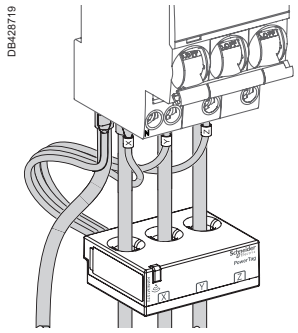

Copper cables					
Rigid		Flexible		Flexible with ferrule	
DB122945	DB112804	DB123553	DB112805	DB123554	DB123008
1.5 to 16 mm² AWG: 16...6	2 x 1.5 to 2.5 mm² AWG: 16...14	1.5 to 16 mm² AWG: 16...6	2 x 1.5 to 2.5 mm² AWG: 16...14	1.5 to 16 mm² AWG: 16...6	2 x 1.5 to 2.5 mm² AWG: 16...14

Stripping length: respect the stripping length stated on the device the PowerTag Energy is associated with.

PowerTag Energy Flex 63 A dimensions (mm)

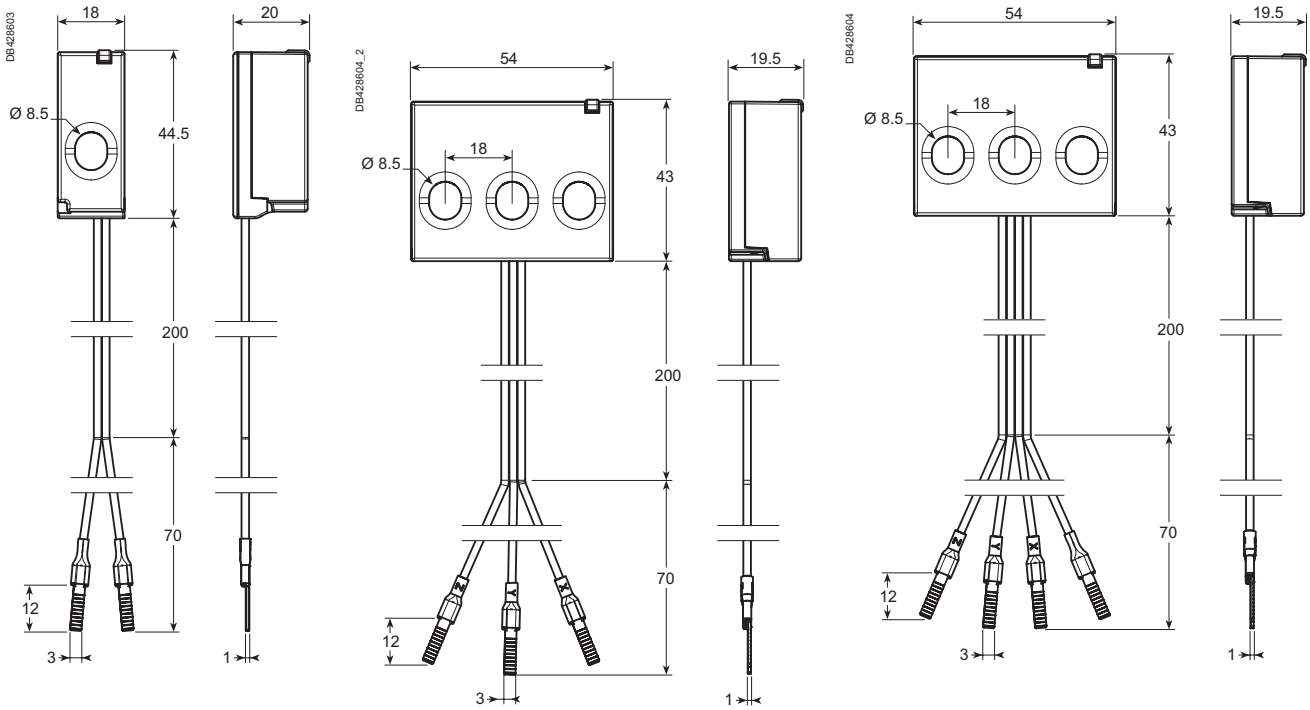

1P+N 3P 3P+N

PowerTag Energy Flex 63 A weight

Type	Weight (g)
1P+N	16
3P	38
3P+N	40

Please refer to PowerTag Energy 63 A Installation Sheet for accurate and complete information on the installation of this product.

PowerLogic™ PowerTag Energy 63 A Resi9

IEC 61557-12 PMD-I/DD/K55/1

As per the above standard:

With its compact design and innovative concept, PowerTag Energy 63 A Resi9 fits directly on the Resi9 protective device and as a result has no impact on DIN rail occupancy and switchboard size.
It is therefore well adapted to be mounted from head of group down to final circuits.
Since voltage and current are measured directly at the same point on the circuit to be monitored, it provides accurate measurement and relevant information such as voltage loss.

PowerTag Energy 63 A Resi9 is dedicated to the Resi9 range of devices and compatible with Wiser concentrators/gateways.

Main characteristics

PowerTag Energy measures the following values in accordance with the IEC 61557-12 standard PMD-I/DD/K55/1:

- Energy:
  - Active energy (kWh): total and partial, delivered and received.
- Voltage loss alarms:
  - PowerTag Energy sends a “voltage loss” alarm before being de-energized.
  - At “voltage loss”, PowerTag Energy adds an overload alarm if the current is higher than the rated current of the associated protective device.

PowerTag Energy
Monoconnect 63 A (M63)

PowerTag Energy
Monoconnect 63 A (M63)

PowerLogic™ PowerTag Energy 63 A Resi9

Installation

Some references of PowerTag Energy 63 A Resi9 (Monoconnect) exist in Top or Bottom version. This is linked to the position of the neutral of the PowerTag Energy.

PowerTag Energy "Top"

- Designed to be mounted on the Top of the circuit breaker.

- Designed to be mounted on the Bottom of the circuit breaker.

PowerTag Energy "Bottom"

Note:
- Some PowerTag Energy 63 A Resi9 can be installed either on the TOP or on the BOTTOM of the protective devices.
- Check the possible mounting position as indicated in the "Catalog numbers" chapter.
- In association with a contactor, a Variable Speed Drive or a motor starter: PowerTag Energy can ONLY be installed UPSTREAM these devices.

Number of poles

Choose the PowerTag Energy according to the number of poles of the protective device: one PowerTag Energy per protective device.

Ex.: 3 pole PowerTag Energy 63 A Resi9 for a 3 pole CB.

PowerLogic™ PowerTag Energy 63 A Resi9

Technical specifications

Main characteristics				
Rated voltage	1P+N / 1P+W	Un	Phase-to-neutral	200… 240 V AC ± 20 %
	3P	Un	Phase-to-phase	380… 415 V AC ± 20 %
	3P+N	Un	Phase-to-neutral	220… 240 V AC ± 20 %
			Phase-to-phase	380… 415 V AC ± 20 %
	R9M43	Un	Phase-to-phase	200… 240 V AC ± 20 %
Frequency				50/60 Hz
Maximum current		Imax		63 A
Basic current		Ib		10 A
Saturation current				130 A
Maximum consumption			1P+N	≤ 1 VA
			3P/3P+N	≤ 2 VA
Starting current		Ist		40 mA
Additional characteristics				
Operating temperature				-25°C to +60°C
Storage temperature				-40°C to +85°C
Overvoltage category			As per IEC 61010-1	Cat. III
Measuring category			As per IEC 61010-2-030	Cat. III
Pollution degree				3
Altitude				≤ 2000 m
Degree of protection			Device only	IP20
			IK	05
Radio-frequency communication				
ISM band 2.4 GHz				2.4 GHz to 2.4835 GHz
Channels			As per IEEE 802.15.4	11 to 26
Isotropic Radiated Power			Equivalent (EIRP)	0 dBm
Maximum transmission time				< 5 ms
Channel occupancy			Messages sent every	5 seconds minimum
Characteristics of measuring functions				
Function		Symbol	Performance category as per IEC 61557-12 (PMD-I/DD/K55/1)	Device measuring range
			Class	
Active energy (delivered and received)		Ea	1	Total and partial 0 to 99999999.9 kWh
Current		I	1	40 mA to 63 A
Voltage		U	0.5	Un ± 20 %

PowerLogic™ PowerTag Energy 63 A Resi9

R9M20

R9M21

R9M40

R9M22

R9M43

R9M41

R9M42

PowerTag Energy Monoconnect 63 A Resi9 Commercial reference numbers

PowerTag Energy for Resi9 **Monoconnect** offers: «Single-terminal» circuit breakers, RCDs and switches with **18 mm pitch between phase and neutral**, rating less than or equal to 63 A.

Commercial reference number	Type	Mounting	Description
R9M20	1P+wire	Top or bottom	PowerTag Energy R9 M63 1PW
R9M21	1P+N	Top	PowerTag Energy R9 M63 1PN T
R9M22		Bottom	PowerTag Energy R9 M63 1PN B
R9M40	3P	Top or bottom	PowerTag Energy R9 M63 3P
R9M43			PowerTag Energy R9 M63 3P 230V LL
R9M41	3P+N	Top	PowerTag Energy R9 M63 3PN T
R9M42		Bottom	PowerTag Energy R9 M63 3PN B

Refer to the Resi9 catalog in your country to select the right PowerTag Energy model to fit on the Resi9 protective device you want to equipped.

R9M60

R9M70

PowerTag Energy Flex 63 A Resi9 Commercial reference numbers

PowerTag Energy **Flex** for other Resi9 devices and specific installations, rating less than or equal to 63 A.

Commercial reference number	Type	Mounting	Description
R9M60	1P+N	Top or bottom	PowerTag Energy R9 F63 1PN
R9M70	3P+N	Top or bottom	PowerTag Energy R9 F63 3PN

Refer to the Resi9 catalog in your country to select the right PowerTag Energy model to fit on the Resi9 protective device you want to equipped.

To allow PowerTag Energy Resi9 F63 to adapt to different types of terminals, the voltage tap lugs can be replaced with other end-pieces or lugs for AWG22/0.33 mm2 wires.

PowerLogic™ PowerTag Energy 63 A Resi9

PowerTag Energy R9 M63 connection

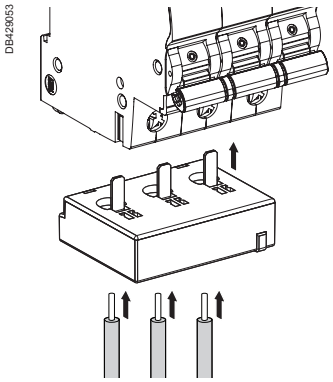

Stripping length : 18 mm

PowerTag Energy R9 M63 dimensions (mm)

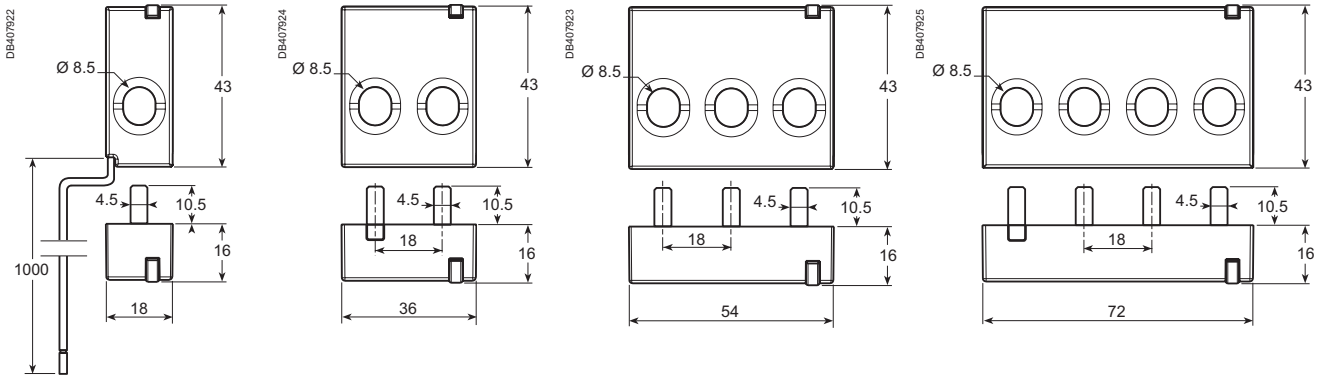

1P+wire 1P+N 3P 3P+N

PowerTag Energy R9 M63 weight

Type	Weight (g)
1P+wire	16.4
1P+N	17.5
3P	28
3P+N	35

PowerLogic™ PowerTag Energy 63 A Resi9

PowerTag Energy R9 F63 connection

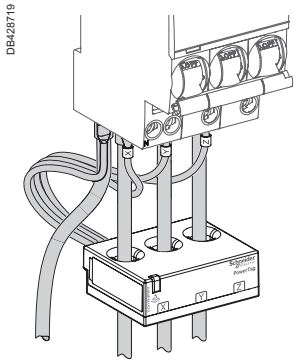

Stripping length: respect the stripping length stated on the device the PowerTag Energy is associated with.

PowerTag Energy R9 F63 dimensions (mm)

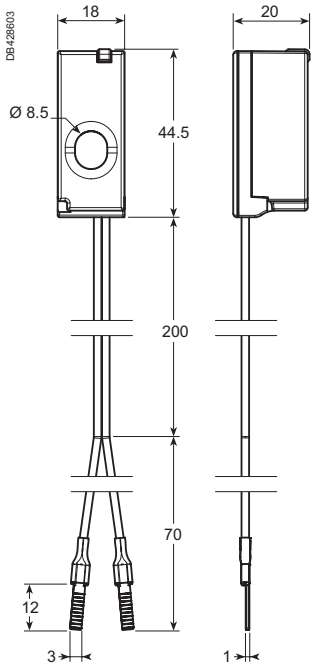

1P+N

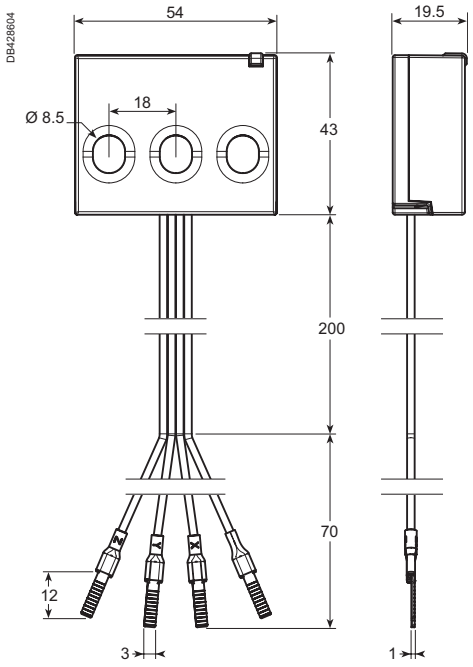

3P+N

PowerTag Energy R9 F63 weight

Type	Weight (g)
1P+N	16
3P	40

Please refer to PowerTag Energy 63 A Resi9 Installation Sheet for accurate and complete information on the installation of this product.

PowerLogic™ PowerTag Energy Flex 160 A

IEC 61557-12 PMD-II/DD/K70/1

As per the above standard:

With its flex design this PowerTag Energy can be used on many products or group of loads up to 160 A on 3P or 3P+N networks. Its removable spring connector for voltage picking facilitates its installation, and shapes for brackets allows to mount and maintain it where needed in a panel.

Main characteristics

PowerTag Energy Flex 160 A measures the following values in accordance with the IEC 61557-12 standard PMD-II/DD/K70/1:

- Energy (4 quadrants):
  - Active energy (kWh): total and partial, delivered and received.
  - Active energy per phase (kWh): total and partial, delivered and received.
  - Reactive energy (kVARh): total and partial, delivered and received.
  - Reactive energy per phase (kVARh): total and partial, delivered and received.
  - Apparent energy (kVAh): total and partial.
  - Apparent energy per phase (kVAh): total and partial.
- Real-time measurement values:
  - Voltages (V): phase-to-phase (U12, U23, U31) and phase-to-neutral (V1N, V2N, V3N).
  - Currents (A): per phase (I1, I2, I3), calculated neutral current when connected (IN) .
  - Power:
    - Active power (W): total and per phase.
    - Reactive power (VAR): total and per phase.
    - Apparent power (VA): total and per phase.
  - Frequency (Hz).
  - Power factor: total and per phase.
- Voltage loss alarms:
  - PowerTag Energy Flex sensor sends a “voltage loss” alarm and the current-per-phase value before being de-energized.
  - At “voltage loss”, PowerTag Energy Flex adds an overload alarm if the current is higher than the rated current of the associated protective device

Note: Functions listed above depends on Concentrator/Gateway.

PowerTag Energy Flex 160 A

PowerLogic™ PowerTag Energy Flex 160 A

Installation

PowerTag Energy Flex 160 A can be installed in a panel directly on cables or busbars, associated to a product or not. Voltage pickings removable spring terminal has to be wired by 1 copper wire per phase with following characteristics:

Wire range

Solid	Stranded	Stranded with terminal ends
0.2...1.5 mm²	0.2...2.5 mm²	0.25...1.5 mm²
24...16 AWG	24...14 AWG	24...16 AWG

Neutral picking shall be connected to have phase-to-neutral voltages, energy per phase and power per phase provided.

PowerTag Energy Flex 160 A is mainly advised for ComPact NSXm, ComPact INS160, Acti9 NG125, Acti9 C120, PowerPact B, TeSys GV4, and all other devices with a rating between 63 A and 160 A.

PB120384

PowerLogic™ PowerTag Energy Flex 160 A

Technical specifications

Main characteristics (as per IEC 61557-12)			
Rated voltage	Un	Phase-to-neutral	100...277 V AC ± 20 %
		Phase-to-phase	173...480 V AC ± 20 %
Frequency			50/60 Hz
Maximum current	Imax		160 A
Maximum operating current			1.2 x Imax
Saturation current			2 x Imax
Maximum consumption			3 VA
Starting current	Ist		100 mA
Basic current	Ib		25 A
Additional characteristic			
Operating temperature			-25 °C to +70 °C
Storage temperature			-40 °C to +85 °C
Overvoltage category		As per IEC 61010-1	Cat. IV
Measuring category		As per IEC 61010-2-030	Cat. IV
Pollution degree			3
Altitude			Up to 2000 m without derating [1]
Degree of protection device			IP20
			IK05
Radio-frequency communication			
ISM band 2.4 GHz			2.4 GHz to 2.4835 GHz
Channels		As per IEEE 802.15.4	11 to 26
Isotropic Radiated Power		Equivalent (EIRP)	0 dBm
Maximum transmission time			< 5 ms
Channel occupancy		For 1 device	messages sent every 5 seconds
Characteristics of measuring functions			
Function	Symbol	Performance category as per IEC 61557-12 (PMD-II/DD/K70/1)	Device measuring range
		Class	
Total active power (Active power per phase)	P	1	24 W (8 W) to 192 kW
Total reactive power (Reactive power per phase)	Q_A	2	30 VAR (10 VAR) to 192 kVAR
Total apparent power (Apparent power per phase)	S_A	2	38 VA (13 VA) to 192 kVA
Active Energy: per phase, total, partial, delivered and received	E_a	1	0 to 281.10^9 kWh
Reactive energy: per phase, total, partial, delivered and received	E_{rA}	2	0 to 281.10^9 kVARh
Apparent energy: per phase, total, partial	E_{apA}	2	0 to 281.10^9 kVAh
Frequency	f	0.5	45 to 65 Hz
Phase current	I	1	100 mA to 320 A
Neutral current	I_{NC}	2	
Voltages (Line to Line)	U	0.5	138 to 576 V AC
Power factor (per phase, total)	PF_A	1	-1 to 1

[1] Above 2000 m, please consult Schneider Electric.

PowerLogic™ PowerTag Energy Flex 160 A

A9MEM1580

PowerTag Energy Flex 160 A Commercial reference numbers

Commercial reference number	Type	Description
A9MEM1580	F160 3P/3P+N	PowerTag Energy Flex 160 A 3P / 3P+N

Check the Concentrators /Gateways compatibility and the list of Schneider Electric compatible devices with the Selection Guide pages 95 to 105.

Contact your Schneider Electric representative for complete ordering information.

PowerTag Energy Flex 160 A dimensions

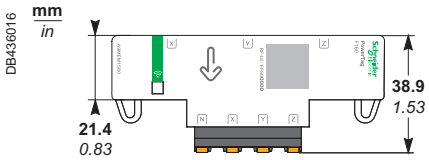

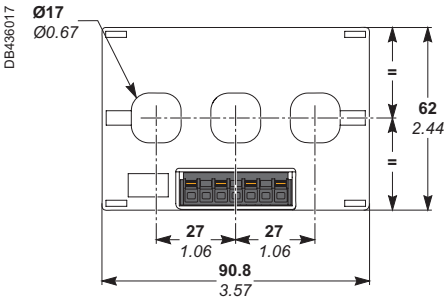

PowerTag Energy Flex 160 A weight

Type	Weight (g)
F160 3P/3P+N	100

Please refer to PowerTag Energy Flex 160 A Installation Sheet for accurate and complete information on the installation of this product.

PowerLogic™ PowerTag Energy Monoconnect 250 A & 630 A

IEC 61557-12 PMD-II/DD/K70/1

As per the above standard:

PowerTag Energy M250/M630 is designed for Molded Case Circuit Breakers and Switches (ComPact, EasyPact CVS and TeSys) for 3P and 3P+N electrical networks. This PowerTag Energy is mounted directly on the bottom side of the circuit breaker or the Vigi add-on if any. Thanks to its integrated design, it does not require any specific wiring, and is compatible with the same connection accessories than the device it is mounted on.

Main characteristics

PowerTag Energy M250/M630 measures the following values in accordance with the IEC 61557-12 standard PMD-II/DD/K70/1:

- Energy (4 quadrants):
  - Active energy (kWh): total and partial, delivered and received.
  - Active energy per phase (kWh): total.
  - Reactive energy (kVARh): partial, delivered and received.
- Real-time measurement values:
  - Voltages (V): phase-to-phase (U12, U23, U31) and phase-to-neutral (V1N, V2N, V3N).
  - Currents (A): per phase (I1, I2, I3).
  - Power:
    - Active power (W): total and per phase.
    - Reactive power (VAR): total.
    - Apparent power (VA): total.
  - Frequency (Hz).
  - Power factor.
- Voltage loss alarms:
  - PowerTag Energy sends a “voltage loss” alarm and the current-per-phase value before being de-energized.
  - At “voltage loss”, PowerTag Energy adds an overload alarm if the current is higher than the rated current of the associated protective device.

Note: Functions listed above depends on Concentrator/Gateway.

LV434020

PowerTag Energy Monoconnect 250 A

PowerLogic™ PowerTag Energy Monoconnect 250 A & 630 A

Installation

The module is self-powered and is installed for fixed devices directly on the bottom side of the circuit breaker or Vigi add-on terminals. For plug-in devices, it has to be installed on the base itself, top or bottom.

PowerTag Energy M250/M630 3P has to be used with 3P devices, and an external neutral voltage tap is provided in case of the installation has a neutral to provide phase-to-neutral voltages, active energy per phase and power per phase.
PowerTag Energy M250/M630 3P+N has to be used with 4P devices and with ComPact INS/INV 3P/4P switches

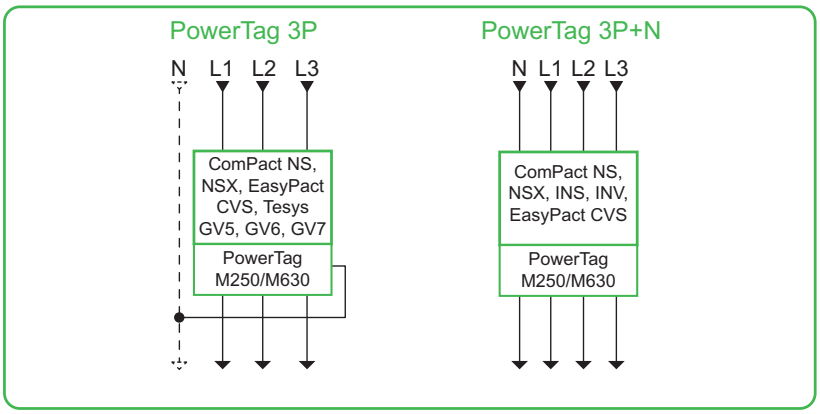

PowerTag M250/M630 modules are compatible with ComPact NSX100/160/250, ComPact NSX400/630, ComPact INS250-100A to 250A, ComPact INS320/400/500/630, ComPact INV100/160/200/250, ComPact INV320/400/500/630, ComPact NS100/160/250, ComPact NS400/630, EasyPact CVS 100-250, EasyPact CVS 400-630, TeSys GV5, TeSys GV6 and TeSys GV7.

Important notice : A derating coefficient may apply for the circuit-breaker on which the PowerTag is mounted on. Refer to the circuit breaker catalogue for derating coefficient.

In case of retrofit, following points have to been checked:

- Clearance to be able to add PowerTag Energy module and to respect bending radius of cables.
- Condition of power connectors: to be replaced if damaged.
- Tightening torques depending of the connector used.

LV434022_image-NSX630-3P

PowerLogic™ PowerTag Energy Monoconnect 250 A & 630 A

Technical specifications

Main characteristics			
Rated voltage	Un	Phase-to-neutral	230 VAC ± 20 %
		Phase-to-phase	400 VAC ± 20 %
Frequency			50/60 Hz
Maximum current	Imax		250 A / 630 A
Maximum operating current			1.2 x Imax
Saturation current			2 x Imax
Maximum consumption			3.7 VA
Starting current	Ist		160 mA / 400 mA
Basic current	Ib		40 A / 100 A
Additional characteristic			
Operating temperature			-25 °C to +70 °C
Storage temperature			-50 °C to +85 °C
Overvoltage category		As per IEC 61010-1	Cat. IV
Measuring category		As per IEC 61010-2-030	Cat. III
Pollution degree			3
Altitude			Up to 2000 m without derating [1]
Degree of protection device			IP20
			IK07
Radio-frequency communication			
ISM band 2.4 GHz			2.4 GHz to 2.4835 GHz
Channels		As per IEEE 802.15.4	11 to 26
Isotropic Radiated Power		Equivalent (EIRP)	0 dBm
Maximum transmission time			< 5 ms
Channel occupancy		For 1 device	messages sent every 5 seconds
Characteristics of measuring functions			
Function	Symbol	Performance category as per IEC 61557-12 (PMD-II/DD/K70/1)	Device measuring range (250 A / 630 A)
		Class	
Total active power (Active power per phase)	P	1	88 W (29 W) to 416 kW / 222 W (74 W) to 1048 kW
Total reactive power	Q_A	2	88 VAR to 416 kVAR / 221 VAR to 1048 kVAR
Total apparent power	S_A	2	88 VA to 416 kVA / 221 VA to 1048 kVA
Active Energy: per phase, total, partial	E_a	1	0 to 281.10^9 kWh
Partial Reactive Energy	E_{rA}	2	0 to 281.10^9 kVARh
Phase current	I	1	160 mA to 500 A / 400 mA to 1260 A
Voltages (Line to Line)	U	0.5	320 to 480 VAC
Power factor	PF_A	1	-1 to 1

[1] Above 2000 m, please consult us.

PowerLogic™ PowerTag Energy Monoconnect 250 A & 630 A

LV434020

LV434021

LV434022

LV434023

PowerTag Energy Monoconnect 250 A & 630 A Commercial reference numbers

Commercial reference number	Type	Description	Connection adapter for mounting on plug-in base only
LV434020	M250 3P	PowerTag Energy 250 A 3P	LV429306
LV434021	M250 3P+N	PowerTag Energy 250 A 3P+N	LV429307
LV434022 (1)	M630 3P	PowerTag Energy 630 A 3P	LV432584
LV434023 (1)	M630 3P+N	PowerTag Energy 630 A 3P+N	LV432585

Check the Concentrators /Gateways compatibility and the list of Schneider Electric compatible devices with the Selection Guide pages 95 to 105.

Contact your Schneider Electric representative for complete ordering information.

(1) For plug-in devices only: when plate mounted, need to add an intercalary wedging plate under the PowerTag Energy module with following dimensions:

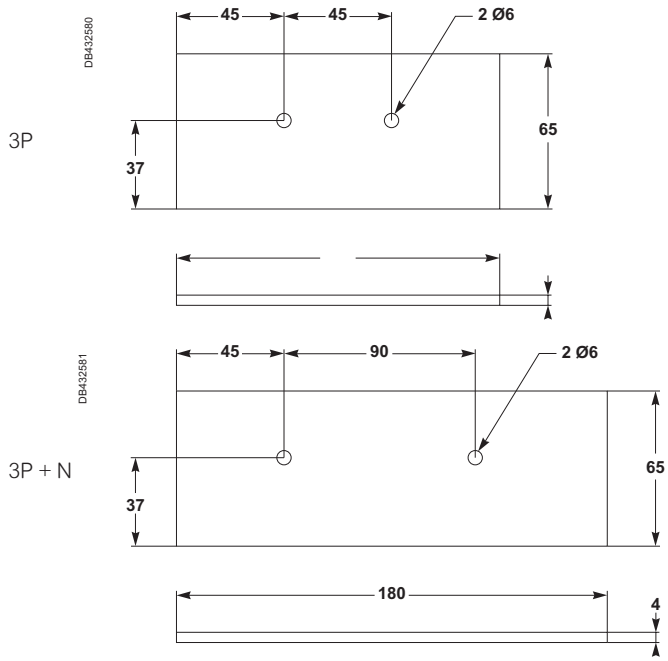

PowerLogic™ PowerTag Energy Monoconnect 250 A & 630 A

NSX100-250 / NSX400-630 / CVS100-250 / CVS400-630

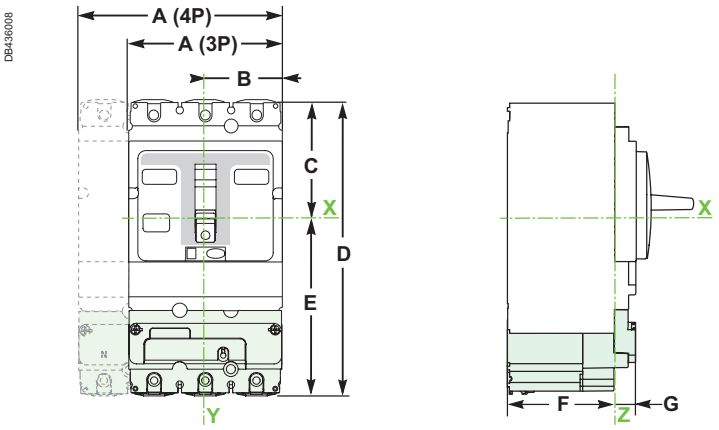

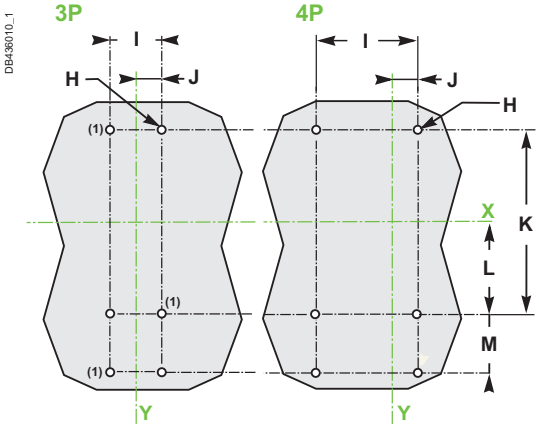

(1) Only for PowerTag M630

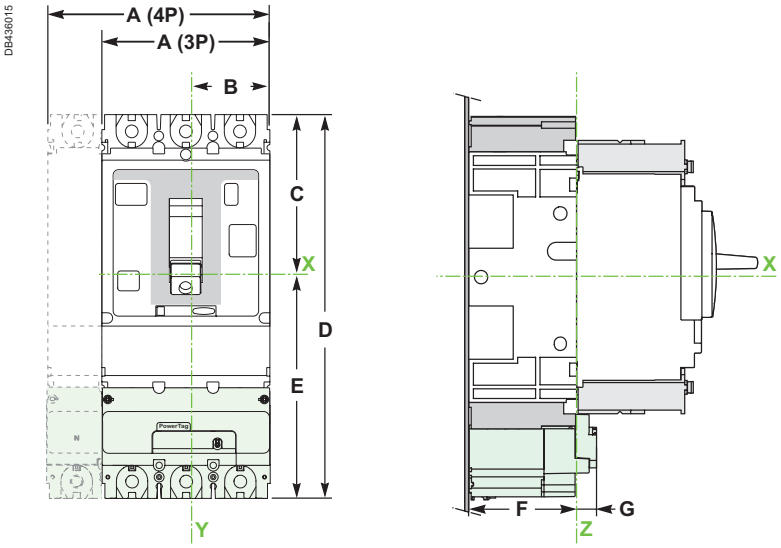

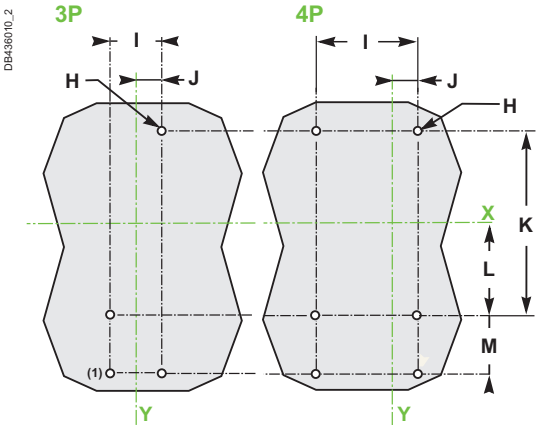

(1) Only for PowerTag M630

mm in	A		B	C	D	E	F	G	H		I		J		K	L	M
	3P	4P							3P	4P	3P	4P	3P	4P			
NSX100-250 CVS 100-250	105 4.13	140 5.51	52.5 2.06	80.5 3.17	201 7.91	120.5 4.74	72 2.83	14 0.55	3 Ø6 3 Ø0.23	6 Ø6 6 Ø0.23	35 1.34	70 2.75	17. 5 0.68	17. 5 0.68	125 4.92	62.5 2.46	40 1.57
NSX400-630 CVS 400-630	140 5.51	185 7.28	70 2.75	127.5 5.02	320 12.59	192.5 7.57	96 3.78	14 0.55	6 Ø6 6 Ø0.23	6 Ø6 6 Ø0.23	45 1.77	90 3.5	22.5 0.88	22.5 0.88	200 7.87	100 3.93	65 2.56
NSX100-250 with plug-in base	105 4.13	140 5.51	52.5 2.06	109 4.29	260 10.23	151 5.94	72 2.83	14 0.55	3 Ø6 3 Ø0.23	6 Ø6 6 Ø0.23	35 1.34	70 2.75	17. 5 0.68	17. 5 0.68	155 6.10	77.5 3.05	55 2.16
NSX400-630 with plug-in base	140 5.51	185 7.28	70 2.75	153 6.02	406 15.98	253 9.96	100 3.93	14 0.55	4 Ø06 4 Ø0.23	6 Ø6 6 Ø0.23	45 1.77	90 3.5	22.5 0.88	22.5 0.88	250 9.84	125 4.92	83 3.26

Please refer to PowerTag Energy 250 A & 630 A Installation Sheet for accurate and complete information on the installation of this product.

PowerLogic™ PowerTag Energy Monoconnect 250 A & 630 A

INS250 / INV100-250

INS320-630 / INV320-630

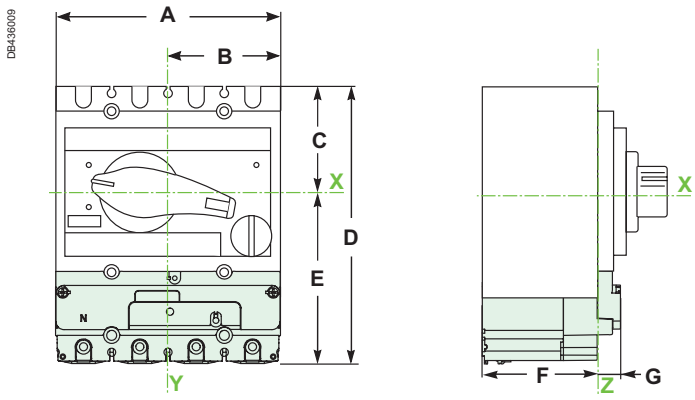

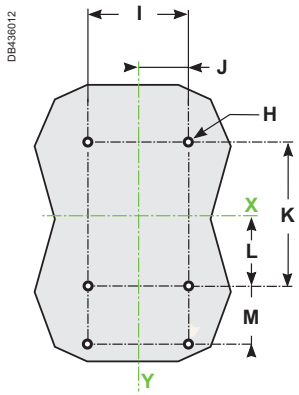

mm in	A	B	C	D	E	F	G	H	I	J	K	L	M
INS250 INV100-250	140 5.51	70 2.75	68 2.67	176 6.93	108 4.25	72 2.83	14 0.55	6 Ø6 6 Ø0.23	70 2.75	35 1.37	100 3.93	50 1.96	40 1.57
INS320-630 INV320-630	185 7.28	92.5 3.64	102.5 4.03	270 10.62	167.5 6.59	96 3.78	14 0.55	6 Ø6 6 Ø0.23	90 3.5	45 1.77	150 5.9	75 2.95	65 2.56

PowerTag Energy Monoconnect 250 A & 630 A weight

Type	Weight (g)
M250 3P	250
M250 3P+N	300
M630 3P	800
M630 3P+N	1000

Please refer to PowerTag Energy 250 A & 630 A Installation Sheet for accurate and complete information on the installation of this product.

PowerLogic™ PowerTag Energy Rope 200 A to 2000 A

IEC 61557-12 PMD-II/DD/K70/1

As per the above standard:

With its flexible and openable current sensors, this PowerTag Energy Rope can be installed easily on busbars and cables without having to disconnect the conductors, and is suitable for 3P or 3P+N networks. Its removable spring connector for voltage picking facilitates its installation, and the module can be mounted on a DIN rail or maintained with brackets where needed in a panel.

Main characteristics

PowerTag Energy Rope measures the following values in accordance with the IEC 61557-12 standard PMD-II/DD/K70/1:

- Energy (4 quadrants):
  - Active energy (kWh): total and partial, delivered and received.
  - Active energy per phase (kWh): total and partial, delivered and received.
  - Reactive energy (kVARh): total and partial, delivered and received.
  - Reactive energy per phase (kVARh): total and partial, delivered and received.
  - Apparent energy (kVAh): total and partial.
  - Apparent energy per phase (kVAh): total and partial.
- Real-time measurement values:
  - Voltages (V): phase-to-phase (U12, U23, U31) and phase-to-neutral (V1N, V2N, V3N).
  - Currents (A): per phase (I1, I2, I3), calculated neutral current when connected (IN).
  - Power:
    - Active power (W): total and per phase.
    - Reactive power (VAR): total and per phase.
    - Apparent power (VA): total and per phase.
  - Frequency (Hz).
  - Power factor: total and per phase.
- Voltage loss alarms:
  - PowerTag Energy Rope sensor sends a “voltage loss” alarm and the current-per-phase value before being de-energized.
  - At “voltage loss”, PowerTag Energy Rope adds an overload alarm if the current is higher than the rated current of the associated protective device.

Note: Functions listed above depends on Concentrator/Gateway.

PowerTag Energy Rope

PowerLogic™ PowerTag Energy Rope

Installation

PowerTag Energy Rope 18 mm module can be mounted on DIN rail or fastened with brackets anywhere in a panel. Then its openable current sensors have to be installed around conductors, cables or busbars, whatever they are insulated or not. Voltage pickings removable spring terminal has to be wired by 1 copper wire per phase with following characteristics:

Wire range

Solid	Stranded	Stranded with terminal ends
0.2...1.5 mm²	0.2...2.5 mm²	0.25...1.5 mm²
24...16 AWG	24...14 AWG	24...16 AWG

Neutral picking shall be connected to have phase-to-neutral voltages, energy per phase and power per phase provided.

PowerTag Energy Rope is mainly advised for ComPact NS, MasterPact NT and NW, MasterPact MTZ NA and HA, for retrofit, for group of loads, and for all other devices with a rating up to 2000 A.

PB120437

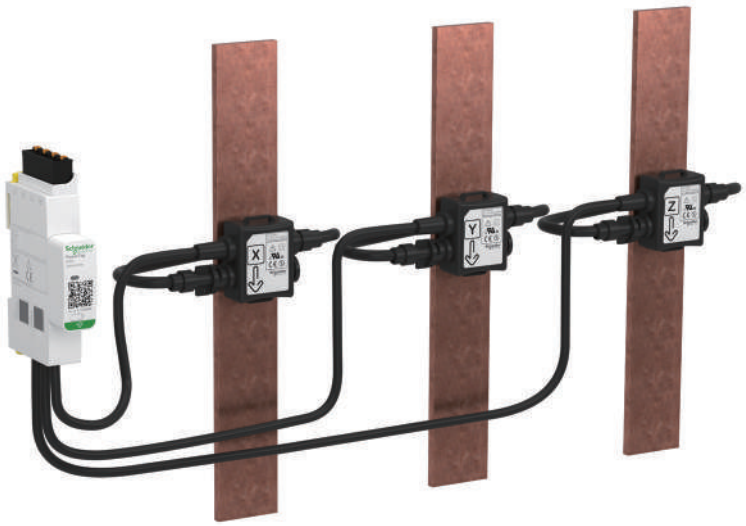

PowerLogic™ PowerTag Energy Rope 200 A to 2000 A

Technical specifications

Main characteristics (as per IEC 61557-12)			
Rated voltage	Un	Phase-to-neutral	100...277 VAC ± 20 %
		Phase-to-phase	173...480 VAC ± 20 %
Frequency			50/60 Hz
Maximum current	Imax		200 A / 600 A / 1000 A / 2000 A
Maximum operating current			1.2 x Imax
Saturation current			2 x Imax
Maximum consumption			3 VA
Starting current	Ist		120 mA / 400 mA / 600 mA / 1.2 A
Basic current	Ib		30 A / 100 A / 150 A / 300 A
Additional characteristic			
Operating temperature			-25 °C to +70 °C
Maximum primary conductor temperature			105 °C (2)
Storage temperature			-40 °C to +85 °C
Overvoltage category		As per IEC 61010-1	Cat. IV
Measuring category		As per IEC 61010-2-030	Cat. IV
Pollution degree			3
Altitude			Up to 2000 m without derating (1)
Degree of protection device			IP20 (IP40 front face)
			IK05
Radio-frequency communication			
ISM band 2.4 GHz			2.4 GHz to 2.4835 GHz
Channels		As per IEEE 802.15.4	11 to 26
Isotropic Radiated Power		Equivalent (EIRP)	0 dBm
Maximum transmission time			< 5 ms
Channel occupancy		For 1 device	messages sent every 5 seconds

Characteristics of measuring functions

Function	Symbol	Performance category as per IEC 61557-12 (PMD-II/DD/K70/1) Class	Device measuring range (200 A / 600 A / 1000 A / 2000 A)
Total active power (Active power per phase)	P	1	29 W (10 W) to 240 kW / 96 W (32 W) to 720 kW / 144 W (48 W) to 1200 kW / 288 W (96 W) to 2400 kW
Total reactive power (Reactive power per phase)	Q_A	2	36 VAR (12 VAR) to 240 kVAR / 120 VAR (40 VAR) to 720 kVAR / 180 VAR (60 VAR) to 1200 kVAR / 360 VAR (120 VAR) to 2400 kVAR
Total apparent power (Apparent power per phase)	S_A	2	46 VA (15 VA) to 240 kVA / 154 VA (51 VA) to 720 kVA / 231 VA (77 VA) to 1200 kVA / 461 VA (154 VA) to 2400 kVA
Active Energy: per phase, total, partial, delivered and received	E_a	1	0 to 281.10^9 kWh
Reactive energy: per phase, total, partial, delivered and received	E_{rA}	2	0 to 281.10^9 kVARh
Apparent energy: per phase, total, partial	E_{apA}	2	0 to 281.10^9 kVAh
Frequency	f	0.5	45 to 65 Hz
Phase current	I	1	120 mA to 400 A / 400 mA to 1200 A / 600 mA to 2000 A / 1.2 A to 4000 A
Neutral current	I_{NC}	2	
Voltages (Line to Line)	U	0.5	138 to 576 VAC
Power factor (per phase, total)	PF_A	1	-1 to 1

(1) Above 2000 m, please consult us.
(2) For higher value, please consult us.

PowerLogic™ PowerTag Energy Rope 200 A to 2000 A

A9MEM159●

PowerTag Energy Rope 200 A to 2000 A Commercial reference numbers

Commercial reference number	Type	Description
A9MEM1590	R200 3P/3P+N	PowerTag Energy Rope 200 A 3P / 3P+N
A9MEM1591	R600 3P/3P+N	PowerTag Energy Rope 600 A 3P / 3P+N
A9MEM1592	R1000 3P/3P+N	PowerTag Energy Rope 1000 A 3P / 3P+N
A9MEM1593	R2000 3P/3P+N	PowerTag Energy Rope 2000 A 3P / 3P+N

Check the Concentrators /Gateways compatibility and the list of Schneider Electric compatible devices with the Selection Guide pages 95 to 105.

Contact your Schneider Electric representative for complete ordering information.

PowerTag Energy Rope 200 A to 2000 A dimensions

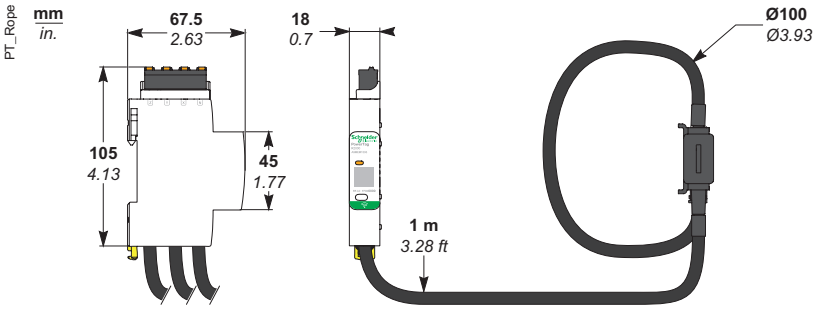

PowerTag Energy Rope 200 A to 2000 A weight

Type	Weight (g)
R200 3P/3P+N	360
R600 3P/3P+N	
R1000 3P/3P+N	
R2000 3P/3P+N	

Please refer to PowerTag Energy Rope 200 A to 2000 A Installation Sheet for accurate and complete information on the installation of this product.

PowerLogic™ PowerTag Energy

Selection guide for product compatibility*

(Compatibility for terminal not equipped with comb busbar)

PowerTag Energy 63 A

Products (AC network)	Mounting position	A9 M63	A9 P63	A9 P63 RCBO	A9 F63
Acti9/Multi9					
Circuit breakers					
iC60/iK60/DT60	Top	☑	-	-	-
	Bottom	☑	-	-	-
iC60 (double terminal)	Top	-	-	-	☑
	Bottom	-	-	-	☑
iC40	Top	-	☑	-	-
	Bottom	-	☑	-	-
DT40/iDPN/C40	Top	-	☑	-	-
	Bottom	-	☑	-	-
C120 ≤ 63 A NG125 ≤ 63 A	Top	-	-	-	☑ (1)
	Bottom	-	-	-	☑ (1)
iC65N-K (China) iC65 (China)	Top	☑	-	-	-
	Bottom	☑	-	-	-
iDPN (China)	Top	-	☑	-	-
	Bottom	-	☑	-	-
iKQ (1P+W PowerTag on each pole)	Top	NA	-	-	-
	Bottom	☑ (1P+W only)	-	-	-
N40	Top	-	☑	-	-
	Bottom	-	☑	-	-
Reflex iC60	Top	☑	-	-	-
	Bottom	☑	-	-	-
Reflex XC40	Top	☑	-	-	-
	Bottom	-	-	-	☑ (1)
C32/C45/C60/C65/K60/T60/ Multi9 OEM (C60N/H/L)	Top	☑	-	-	-
	Bottom	☑	-	-	-
Circuit breakers equipped with Vigi module					
iC60/iC65/iC60/iC65N-K with Vigi module	Top	☑ (CB)	-	-	-
	Bottom	-	-	-	☑ (1) (Vigi)
iC40 with Vigi iCG40	Top CB	-	☑ (CB)	-	-
	Top (Vigi)	-	☑ (2) (Vigi 1P+N)	-	-
	Bottom (Vigi)	-	-	-	☑ (Vigi 3P+N)
iC40 with "outgoer" Vigi module	Top	-	☑ (CB)	-	-
	Bottom	-	-	-	☑ (Vigi)
DT40/DPN/C40 with "group feeder" Vigi module	Top CB	-	☑ (CB)	-	-
	Top Vigi	-	☑ (Vigi 1P+N)	-	☑ (Vigi 3P+N)
DT40/DPN/C40 with "outgoer" Vigi module	Top	-	☑ (CB)	-	-
	Bottom	-	-	-	☑ (Vigi)
DT60 with Vigi TG60	Top CB	☑ (CB) only A9MEM1541	-	-	-
	Top Vigi	-	-	-	☑ (1) (Vigi)

(1) You may need to change the voltage measurement cable terminals of the PowerTag Energy F63 by other cable ends (wire AWG22/0.33 mm²) for a more suitable connection to this product.
(2) Product usually associated with a comb busbar

(*) Refer to the product catalog for technical characteristics

PowerLogic™ PowerTag Energy

Selection guide for product compatibility*

(Compatibility for terminal not equipped with comb busbar)

PowerTag Energy 63 A

Products (AC network)	Mounting position	A9 M63	A9 P63	A9 P63 RCBO	A9 F63
Acti9/Multi9					
Circuit breakers equipped with Vigi module (cont')					
C120 ≤ 63 A NG125 ≤ 63 A with Vigi module	Top	-	-	-	☑ (1) (CB)
	Bottom	-	-	-	☑ (1) (Vigi)
Circuit breakers equipped with Arc fault detection unit					
iC60 with ARC unit	Top	☑ (CB)	-	-	-
	Bottom	-	-	-	☑ (add-on block)
iC40 with ARC unit	Top	-	☑ (CB)	-	-
	Bottom	-	-	-	☑ (add-on block)
Arc fault detection devices					
iC40N ARC / iCV40N VigiARC	Top	☑	-	-	-
	Bottom	☑	-	-	-
Residual current devices					
iID/iID K	Top	☑	-	-	-
	Bottom	☑	-	-	-
iID (double terminal)	Top	-	-	-	☑
	Bottom	-	-	-	☑
iID40	Top	-	☑ (2) (1P+N)	-	☑ (2) (3P+N)
	Bottom	☑	-	-	-
iDPN Vigi "outgoer" 1P+N	Top	-	☑	-	-
	Bottom	-	☑	-	-
iC60H RCBO/iC60H2 RCBO/ IKQE RCBO	Top	NA (fishbone)	-	-	-
	Bottom	-	-	☑	-
iC60 RCBO	Top	☑	-	-	-
	Bottom	☑	-	-	-
iCV40 "outgoer" 1P+N	Top	-	☑	-	-
	Bottom	-	☑	-	-
iCV40 "outgoer" 3P+N	Top	-	☑	-	-
	Bottom	-	-	-	☑
DPN Vigi/DT40 Vigi/C40 Vigi "outgoer" 1P+N	Top	-	☑	-	-
	Bottom	-	☑	-	-
DPN Vigi/DT40 Vigi/C40 Vigi/ iDPN Vigi "outgoer" 3P+N	Top	-	☑	-	-
	Bottom	-	-	-	☑
DPN Vigi K	Top	-	-	-	☑ (1)
	Bottom	-	-	-	☑ (1)
N40 Vigi "outgoer"	Top	-	☑	-	-
	Bottom	-	☑	-	-
iDc/ITG40/C40	Top Left	-	☑	-	-
	Top Right	-	☑	-	-

(1) You may need to change the voltage measurement cable terminals of the PowerTag Energy F63 by other cable ends (wire AWG22/0.33 mm²) for a more suitable connection to this product.
(2) Product usually associated with a comb busbar

(*) Refer to the product catalog for technical characteristics

PowerLogic™ PowerTag Energy

Selection guide for product compatibility*

(Compatibility for terminal not equipped with comb busbar)

PowerTag Energy 63 A

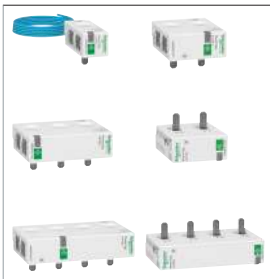

Products (AC network)	Mounting position	A9 M63	A9 P63	A9 P63 RCBO	A9 F63
Acti9/Multi9					
Residual current devices (cont')					
DCP Vigi	Top	☑	-	-	-
	Bottom	☑	-	-	-
C60H RCBO (Multi9)	Top	NA (fishbone)	-	-	-
	Bottom	-	-	☑	-
ID ≤ 63 A/ID K biconnect/ ID Type B ≤ 63 A	Top	☑	-	-	-
	Bottom	☑	-	-	-
RED/REDs/REDTest	Top	-	-	-	☑ (1)
	Bottom	-	-	-	☑ (1)
Switches					
iSW ≤ 63 A	Top	☑	-	-	-
	Bottom	☑	-	-	-
iSW-NA ≤ 63 A	Top	☑	-	-	-
	Bottom	☑	-	-	-
iSW 20/32 A	Top	-	-	-	☑
	Bottom	-	-	-	☑
i-NA ≤ 63 A	Top	☑	-	-	-
	Bottom	☑	-	-	-
NG125 NA ≤ 63 A	Top	-	-	-	☑ (1)
	Bottom	-	-	-	☑ (1)
Fuse disconnectors					
STI	Top	-	-	-	☑
	Bottom	-	-	-	☑
SBI 14x51/SBI 22x58 ≤ 63 A	Top	-	-	-	☑ (1)
	Bottom	-	-	-	☑ (1)
D01/D02	Top	-	-	-	☑ (1)
	Bottom	-	-	-	☑ (1)

(1) You may need to change the voltage measurement cable terminals of the PowerTag Energy F63 by other cable ends (wire AWG22/0.33 mm²) for a more suitable connection to this product.

(*) Refer to the product catalog for technical characteristics

PowerLogic™ PowerTag Energy

Selection guide for product compatibility*

(Compatibility for terminal not equipped with comb busbar)

PowerTag Energy 63 A

Products (AC network)	Mounting position	A9 M63	A9 P63	A9 P63 RCBO	A9 F63
TeSys					
Motor circuit breakers					
GV2	Top	-	-	-	☑ (1) (2)
	Bottom	-	-	-	☑ (1) (2)
GV3 ≤ 63 A	Top	-	-	-	☑ (1) (2)
	Bottom	-	-	-	☑ (1) (2)
Contactors					
TeSys D ≤ 63 A	Top	-	-	-	☑ Upstream only (1)
	Bottom	-	-	-	
TeSys K	Top	-	-	-	☑ Upstream only (1)
	Bottom	-	-	-	
Motor starter					
TeSys U	Top	-	-	-	☑ Upstream only (1)
	Bottom	-	-	-	

(1) You may need to change the voltage measurement cable terminals of the PowerTag Energy F63 by other cable ends (wire AWG22/0.33 mm²) for a more suitable connection to this product.
(2) PowerTag Energy sensors withstand motor starting in-rush currents. Environmental mission profile : Buildings as per 60721-3-3.

(*) Refer to the product catalog for technical characteristics

PowerLogic™ PowerTag Energy

Selection guide for product compatibility*

(Compatibility for terminal not equipped with comb busbar)

Products (AC network)		Mounting position	PowerTag Energy 160 A F160 3P / 3P+N
Acti9			
Circuit breakers			
C120 (with or without Vigi module)	3P / 3P+N	Top / Bottom	☑
NG125 (with or without Vigi module)	3P / 3P+N	Top / Bottom	☑
Residual current devices			
iID > 63 A	3P+N	Top / Bottom	☑
RCCB-ID 125 A	3P+N	Top / Bottom	☑
Fuse disconnectors			
SBI > 63 A	3P / 3P+N	Top / Bottom	☑
Switches			
NG125 NA	3P / 3P+N	Top / Bottom	☑
iSW > 63 A	3P / 3P+N	Top / Bottom	☑
iSW NA > 63 A	3P+N	Top / Bottom	☑
ComPact			
Circuit breakers			
NSXm	3P / 3P+N	Top / Bottom	☑ (5)
Switches			
NSXm NA	3P / 3P+N	Top / Bottom	☑ (5)
INS 80/100/125/160	3P / 3P+N	Top / Bottom	☑
PowerPact			
Circuit breakers			
B	3P / 3P+N	Top / Bottom	☑ (6)
TeSys			
Motor circuit breakers			
GV3 > 65 A	3P	Top / Bottom	☑
GV4	3P	Top / Bottom	☑
Contactors			
63 A < TeSys D ≤ 160 A	3P / 3P+N	Top	☑ Upstream only
TeSys F ≤ 160 A	3P / 3P+N	Top	☑ Upstream only

(5) It is advised to use EverLink connectors with control wire terminal (LV426970 for 3P / LV426971 for 4P)
(6) It is advised to use EverLink connectors with control wire terminal (LV426974 for 3P / LV426975 for 4P)

(*) Refer to the product catalog for technical characteristics

PowerLogic™ PowerTag Energy

Selection guide for product compatibility*

(Compatibility for terminal not equipped with comb busbar)

			PowerTag Energy 250 A		PowerTag Energy 630 A	
Products (AC network)		Mounting position	M250 3P	M250 3P+N	M630 3P	M630 3P+N
ComPact						
Circuit breakers						
NSX100/160/250 B/F/N/H/S/L/R/NA Fixed	3P	Bottom	☑	-	-	-
	4P	Bottom	-	☑	-	-
NSX400/630 F/N/H/S/L/R/NA Fixed	3P	Bottom	-	-	☑	-
	4P	Bottom	-	-	-	☑
NSX100/160/250 B/F/N/H/S/L/R/NA Plug-In (mounted on the base)	3P	Top / Bottom	☑	-	-	-
	4P	Top / Bottom	-	☑ (3)	-	-
NSX400/630 F/N/H/S/L/R/NA Plug-In (mounted on the base)	3P	Top / Bottom	-	-	☑ (4)	-
	4P	Top / Bottom	-	-	-	☑ (3) (4)
NS100/160/250 N/SX/H/L/NA Fixed	3P	Bottom	☑	-	-	-
	4P	Bottom	-	☑	-	-
NS400/630 N/H/L/NA Fixed	3P	Bottom	-	-	☑	-
	4P	Bottom	-	-	-	☑
NS100/160/250 N/SX/H/L/NA Plug-In (mounted on the base)	3P	Top / Bottom	☑	-	-	-
	4P	Top / Bottom	-	☑ (3)	-	-
NS400/630 N/H/L/NA Plug-In (mounted on the base)	3P	Top / Bottom	-	-	☑ (4)	-
	4P	Top / Bottom	-	-	-	☑ (3) (4)
Circuit breakers equipped with Vigi block						
NSX100/160/250 B/F/N/H/S/L/R/NA Fixed	3P	Bottom	☑	-	-	-
	4P	Bottom	-	☑	-	-
NSX400/630 F/N/H/S/L/R/NA Fixed	3P	Bottom	-	-	☑	-
	4P	Bottom	-	-	-	☑
NSX100/160/250 B/F/N/H/S/L/R/NA Plug-In (mounted on the base)	3P	Top	☑	-	-	-
NSX400/630 F/N/H/S/L/R/NA Plug-In (mounted on the base)	3P	Top	-	-	☑ (4)	-
Switches						
INS250/INV - 100/160/200/250	3P	Bottom	-	☑	-	-
	4P	Top / Bottom	-	☑ (3)	-	-
INS/INV - 320/400/500/630	3P	Bottom	-	-	-	☑
	4P	Top / Bottom	-	-	-	☑ (3)
TeSys						
Motor circuit breakers						
GV5, GV7	3P	Bottom	☑	-	-	-
GV6	3P	Bottom	-	-	☑	-
EasyPact						
Circuit breakers						
CVS 100-250	3P	Bottom	☑			
	4P	Bottom		☑		
CVS 400-630	3P	Bottom			☑	
	4P	Bottom				☑

(3) neutral on the right when mounted on top side
(4) when plate mounted, need to add a 4 mm intercalary under the PowerTag module (see ComPact NSX catalog)

(*) Refer to the product catalog for technical characteristics

PowerLogic™ PowerTag Energy

Selection guide for product compatibility*

(Compatibility for terminal not equipped with comb busbar)

			PowerTag Energy Rope			
Products (AC network)		Mounting position	R200 3P / 3P+N	R600 3P / 3P+N	R1000 3P / 3P+N	R2000 3P / 3P+N
ComPact						
Circuit breakers						
NS 630b	3P / 3P+N	Top / Bottom	-	☑	-	-
NS 800/1000	3P / 3P+N	Top / Bottom	-	-	☑	-
NS 1250/1600/1600b/2000	3P / 3P+N	Top / Bottom	-	-	-	☑
Switches						
INS/INV 630b	3P / 3P+N	Top / Bottom	-	☑	-	-
INS/INV 800/1000	3P / 3P+N	Top / Bottom	-	-	☑	-
INS/INV 1250/1600/2000	3P / 3P+N	Top / Bottom	-	-	-	☑
NS 630b NA	3P / 3P+N	Top / Bottom	-	☑	-	-
NS 800/1000 NA	3P / 3P+N	Top / Bottom	-	-	☑	-
NS 1250/1600/1600b/2000 NA	3P / 3P+N	Top / Bottom	-	-	-	☑
MasterPact						
Circuit breakers						
NT 06	3P / 3P+N	Top / Bottom	-	☑	-	-
NT 08/10	3P / 3P+N	Top / Bottom	-	-	☑	-
NT 12/16	3P / 3P+N	Top / Bottom	-	-	-	☑
NW 08/10	3P / 3P+N	Top / Bottom			☑	-
NW 12/16/20	3P / 3P+N	Top / Bottom	-	-	-	☑
Switches						
NT 06 HA	3P / 3P+N	Top / Bottom	-	☑	-	-
NT 08/10 HA	3P / 3P+N	Top / Bottom	-	-	☑	-
NT 12/16 HA	3P / 3P+N	Top / Bottom	-	-	-	☑
NW 08/10 NA/HA/HF	3P / 3P+N	Top / Bottom	-	-	☑	-
NW 12/16/20 NA/HA/HF	3P / 3P+N	Top / Bottom	-	-	-	☑
MTZ1 06 HA	3P / 3P+N	Top / Bottom	-	☑	-	-
MTZ1 08/10 HA	3P / 3P+N	Top / Bottom	-	-	☑	-
MTZ1 12/16 HA	3P / 3P+N	Top / Bottom	-	-	-	☑
MTZ2 08/10 NA/HA/HA10	3P / 3P+N	Top / Bottom	-	-	☑	-
MTZ2 12/16/20 NA/HA/HA10	3P / 3P+N	Top / Bottom	-	-	-	☑
TeSys						
Contactors						
TeSys D > 160 A	3P / 3P+N	Top	☑ Upstream only	-	-	-
160 A < TeSys F ≤ 2000 A	3P / 3P+N	Top	☑ Upstream only	☑ Upstream only	☑ Upstream only	☑ Upstream only
Others						
Circuit breakers / Switches / Motor circuit breakers						
All products below 200 A	3P / 3P+N	Top / Bottom	☑	-	-	-
All products between 200 A and 600 A	3P / 3P+N	Top / Bottom	-	☑	-	-
All products between 600 A and 1000 A	3P / 3P+N	Top / Bottom	-	-	☑	-
All products between 1000 A and 2000 A	3P / 3P+N	Top / Bottom	-	-	-	☑

(*) Refer to the product catalog for technical characteristics

PowerLogic™ PowerTag Energy

Selection guide for concentrators / gateways compatibility*

Concentrators / gateways

		Wiser IP module Wiser IP module+ EER31800	PowerTag Link C PowerTag Link C+ A9XELC10	Smartlink SI B A9XMZA08 Smartlink SI D A9XMWA20	PowerTag Link A9XMWD20 PowerTag Link HD A9XMWD100
PowerTag Energy M63					
	A9MEM1520	☑	☑	☑	☑
	A9MEM1521	☑	☑	☑	☑
	A9MEM1522	☑	☑	☑	☑
	A9MEM1540	☑	☑	☑	☑
	A9MEM1541	☑	☑	☑	☑
	A9MEM1542	☑	☑	☑	☑
	A9MEM1543	☑	☑	-	☑
PowerTag Energy M63 Resi9					
	R9M20	☑	-	-	-
	R9M21	☑	-	-	-
	R9M22	☑	-	-	-
	R9M40	☑	-	-	-
	R9M41	☑	-	-	-
	R9M42	☑	-	-	-
	R9M43	☑	-	-	-
PowerTag Energy P63					
	A9MEM1561	☑	☑	☑	☑
	A9MEM1562	☑	☑	☑	☑
	A9MEM1563	☑	☑	☑	☑
	A9MEM1571	☑	☑	☑	☑
	A9MEM1572	☑	☑	☑	☑
PowerTag Energy F63					
	A9MEM1560	☑	☑	☑	☑
	A9MEM1564	-	-	-	☑
	A9MEM1570	☑	☑	☑	☑
	A9MEM1573	-	-	-	☑
	A9MEM1574	-	-	-	☑
PowerTag Energy F63 Resi9					
	R9M60	☑	-	-	-
	R9M70	☑	-	-	-

(*) Refer to the product catalog for technical characteristics

PowerLogic™ PowerTag Energy
Selection guide for concentrators / gateways compatibility*

Concentrators / gateways

		Harmony Hub ZBRN1 ZBRN2 ZBRN32	EcoStruxure™ Panel Server Universal PAS600●	Wireless Panel Server for PrismaSeT Active
PowerTag Energy M63				
	A9MEM1520	-	☑	☑
	A9MEM1521	-	☑	☑
	A9MEM1522	-	☑	☑
	A9MEM1540	-	☑	☑
	A9MEM1541	-	☑	☑
	A9MEM1542	-	☑	☑
	A9MEM1543	-	☑	-
PowerTag Energy M63 Resi9				
	R9M20	-	-	-
	R9M21	-	-	-
	R9M22	-	-	-
	R9M40	-	-	-
	R9M41	-	-	-
	R9M42	-	-	-
	R9M43	-	-	-
PowerTag Energy P63				
	A9MEM1561	-	☑	☑
	A9MEM1562	-	☑	☑
	A9MEM1563	-	☑	☑
	A9MEM1571	-	☑	☑
	A9MEM1572	-	☑	☑
PowerTag Energy F63				
	A9MEM1560	☑	☑	☑
	A9MEM1564	-	☑	-
	A9MEM1570	☑	☑	☑
	A9MEM1573	☑	☑	☑
	A9MEM1574	-	☑	-
PowerTag Energy F63 Resi9				
	R9M60	-	-	-
	R9M70	-	-	-

(*) Refer to the product catalog for technical characteristics

PowerLogic™ PowerTag Energy
Selection guide for concentrators / gateways compatibility*

Concentrators / gateways

		Wiser IP module Wiser IP module+ EER31800	PowerTag Link C PowerTag Link C+ A9XELC10	Smartlink SI B A9XMZA08 Smartlink SI D A9XMWA20	PowerTag Link A9XMWD20 PowerTag Link HD A9XMWD100
PowerTag Energy F160					
	A9MEM1580	-	☑ (PowerTag Link C+ only)	-	☑
PowerTag Energy M250-M630					
	LV434020	☑	☑	☑	☑
	LV434021	☑	☑	☑	☑
	LV434022	☑	☑	☑	☑
	LV434023	☑	☑	☑	☑
PowerTag Energy R200-R600-R1000-R2000					
	A9MEM1590	-	☑ (PowerTag Link C+ only)	-	☑
	A9MEM1591	-	☑ (PowerTag Link C+ only)	-	☑
	A9MEM1592	-	☑ (PowerTag Link C+ only)	-	☑
	A9MEM1593	-	☑ (PowerTag Link C+ only)	-	☑

(*) Refer to the product catalog for technical characteristics

PowerLogic™ PowerTag Energy
Selection guide for concentrators / gateways compatibility*

Concentrators / gateways

		Harmony Hub ZBRN1 ZBRN2 ZBRN32	EcoStruxure™ Panel Server Universal PAS600●	Wireless Panel Server for PrismaSeT Active
PowerTag Energy F160				
	A9MEM1580	☑	☑	☑
PowerTag Energy M250-M630				
	LV434020	☑	☑	☑
	LV434021	☑	☑	☑
	LV434022	☑	☑	☑
	LV434023	☑	☑	☑
PowerTag Energy R200-R600-R1000-R2000				
	A9MEM1590	☑	☑	☑
	A9MEM1591	☑	☑	☑
	A9MEM1592	☑	☑	☑
	A9MEM1593	☑	☑	☑

(*) Refer to the product catalog for technical characteristics

Wireless Products

Schneider Electric offers a range of wireless products designed for new builds or retrofit installations. These are reliable, low-cost and easy to use wireless solutions with long battery life that does not compromise performance

- PowerLogic™ PowerTag Control
- PowerLogic™ HeatTag

A9XMC2D3

SMT10020

PowerLogic™ PowerTag Control

PowerTag Control monitors circuits wirelessly, collecting status of daisy-chained circuit breakers and notifying the data concentrator of information status, such as OF, SD, Contractor or Impulse Relay position indication. These wireless input/output modules allow circuit control and status monitoring. Designed for use in commercial and building applications, they quickly and easily turn your distribution board into a connected panel.

PowerTag Control also connects to pulse relays or contactors for remote control within a building management system for non-critical loads, such as lighting.

Applications:

- Monitors your electrical installation from main incomer down to load level
- Suitable for various business, buildings, industrial and residential applications with easy integration in upper systems
- Supports and enables Energy efficiency programs and standards such as:

  - European Energy Efficiency Directive (EED)
  - Energy Performance of Buildings Directive (EPBD)
  - IEC 60364-8-1 “Low Voltage Electrical installations - Energy Efficiency”
  - EN 17267 “Energy Measurement and Monitoring plan”
  - ISO 50001 “Energy Management System”

A9XMC2D3 Image2

A9XMC2D3

PowerTag Control

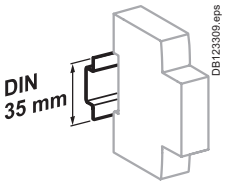

Clip on DIN rail 35 mm.

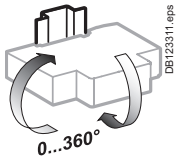

Indifferent position of installation.

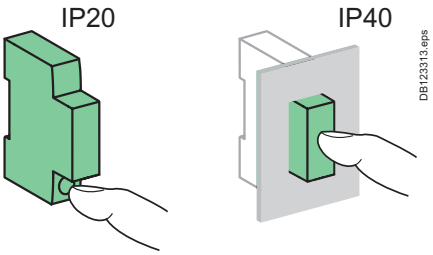

Technical characteristics

Main characteristics		
Power supply		230 V AC ± 20%
Frequency		50/60 Hz
Maximum consumption	IO	≤ 2 VA
	2DI	≤ 3 VA
Operating temperature		-25°C to +60°C
Storage temperature		-40°C to +85°C
Relative humidity (60068-2-78)		93 % at 40°C
Overvoltage category	As per IEC 61010-1	Cat. III
Altitude		≤ 2000 m
Pollution degree		3
Degree of protection according to IEC 60529	Front face	IP40
	Casing	IP20
	IK	05
Characteristics of inputs and outputs		
Digital input		
Type		230 V AC, dry contact
Digital output		
Type		230 V AC, dry contact
Relay type		Normally open or normally closed (3)
Applicable voltage on output		230 V AC ± 20%
Minimum/maximum current on output		10 mA / 2 A
Type of output order		Pulse or latch (3)
Pulse length in control mode with impulse relay		Nominal: 300 ms
Radio-frequency communication		
ISM band 2.4 GHz		2.4 GHz to 2.4835 GHz
Channels	As per IEEE 802.15.4	11 to 26
Isotropic Radiated Power	Equivalent (EIRP)	0 dBm
Channel occupancy	Messages sent	■ On event ■ Periodically (5s nominal)

(3) Setting adjustable

Dimensions (mm)

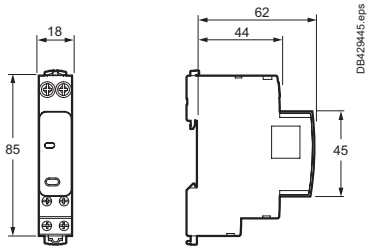

Weight (g)

PowerTag C	
PowerTag C IO 230 V	80
PowerTag C 2DI 230 V	75

Connection

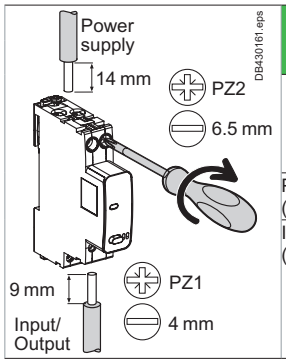

Terminals	Tightening torque	Copper cables		
		Rigid	Flexible	Flexible with ferrule
Power supply (Top)	2 N.m	1 to 16 mm² (AWG: 18...6)	0.5 to 10 mm² (AWG: 21...8)	-
Input/Output (Bottom)	1 N.m	1x: 1 to 6 mm² (AWG: 18...10) 2x: 1.5 to 2.5 mm² (AWG: 16...14)	1x: 0.5 to 4 mm² (AWG: 21...12) 2x: 1.5 to 2.5 mm² (AWG: 16...14)	1x: 0.5 to 4 mm² (AWG: 21...12) 2x: -

PowerTag Control

PowerTag C IO module

- Compatible with horizontal comb busbars 9 mm modules
- Automatic cable guiding in the correct position: terminals with guard

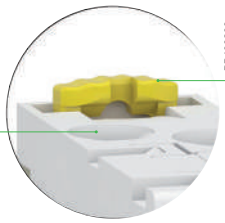

- Assembly and disassembly by operating toggle latches at the top and bottom of the products

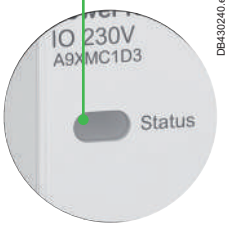

Status LED

- Provide information about PowerTag C status

- Insulated terminals IP20

Logo

- Wireless communication device

Push button

- Local output control
- Decommissioning

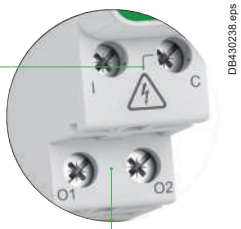

Monitoring / Back loop circuit

- "I" digital input terminal
- "C" common powered terminal 230 V AC

Control circuit

- Logical output relay
- "O" output terminals 230 V AC - 2 A max.

PowerTag Control

PowerTag C 2DI module

- Compatible with horizontal comb busbars 9 mm modules
- Automatic cable guiding in the correct position: terminals with guard

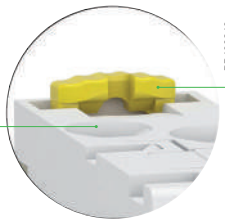

- Assembly and disassembly by operating toggle latches at the top and bottom of the products

- Insulated terminals IP20

Status LED

- Provide information about PowerTag C status

Logo

- Wireless communication device

Flush mounted push button

- Decommissioning

Monitoring circuits

- "I" digital input terminals
- "C" common powered terminals 230 V AC

PowerLogic™ HeatTag

Wireless Sensor for early detection of overheating cables

The PowerLogic™ HeatTag sensor analyzes gas and airborne particles helping facility manager to anticipate and act before smoke appears or an electrical fire starts.

Electrical fires generate huge losses in commercial and industrial buildings, interrupting production and delaying service delivery. These losses can be prevented if early detection of component overheating is accurately detected and alarmed.

PowerLogic™ HeatTag helps prevent electrical cabinets from being damaged by analyzing airborne gas and particles and sending alerts before smoke appears or an electrical fire starts. HeatTag is much more than a fire or smoke detector - it scientifically detects overheating in electrical installations before any damage is done.

PB120568

SMT10020

The solution for

Markets that can benefit from a solution that includes PowerLogic™ HeatTag smart sensors:

- Buildings
- Industry
- Healthcare
- Data Center and networks
- Infrastructure

Benefits

System integrators' benefit

- Ease of integration
- Ease of setup
- Cost effectiveness
- Seamless integration with EcoStruxure™ solutions

Panel builders' benefit

- No settings
- Nominal environment auto-learning to avoid false alerts
- Concentrator auto-discovery
- Alerts generated by a powerful algorithm integrated in HeatTag

End users' benefit

- Ease of use
- Prevents fire damage and associated costs
- Comprehensive, consistent and superior performance
- Maximize uptime, eliminate faults, and enhance safety

Competitive advantages

- Easy to install and operate
- Suitable for non forced ventilated cabinets ≥ IP31
- Immediately detects overheating in cables and connections
- More than a smoke detector or heat sensor
- 3 levels of alert recording
- Monitors air quality index
- Continuous improvements of algorithms

Power management solutions

Schneider Electric provides innovative power management solutions to increase your energy efficiency and cost savings, maximize electrical network reliability and availability, and optimize electrical asset performance.

Conformity of standards

- IEC/UL 61010-1
- IEC 61010-2-201
- IEC 61326-1
- IEC61326-2-3
- ETSI EN 301 489-1
- ETSI EN 301 489-17
- ETSI EN 300 328
- EN 62311
- EN IEC 63000
- IEEE 802.15.4 protocol
- FCC and IC certified

HeatTag sensors

PB120568

PowerLogic™ HeatTag sensor

PB120569

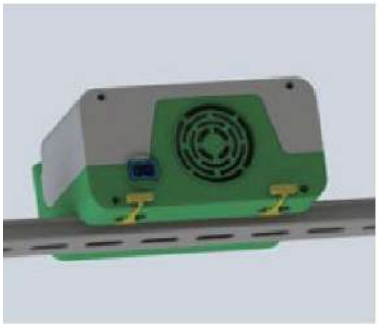

HeatTag rear view showing fan

PB120570

HeatTag sensor DIN mounted

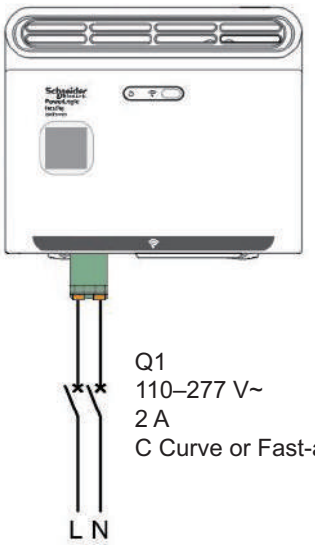

HeatTag features

Sensor Characteristics		
Temperature measurement	Measurement range	-15 °C / +70 °C (5 °F to 158 °F)
	Measurement accuracy	-1.1 °C / +1.1 °C
	Default transmission period	60 seconds (higher in case of high wireless data traffic)
Humidity measurement	Measurement range	15–90 %
	Measurement accuracy	±9 RH %
	Default transmission period	60 seconds (higher in case of high wireless data traffic)
Air quality	Index (0 to 10), alert generation when index ≥10	
Test alert after pairing	During first 30 minutes	
Environment auto-learning phase	8 hours after the first 30 minutes	
Mechanical Characteristics		
Dimensions (W x H x D)		108 x 107 x 55 mm
Weight		270 g
Degree of protection (IEC 60529)		IP 20
Electrical Characteristics		
Supply voltage		110–277 V AC, -15 % / +15 %
Frequency		50–60 Hz
Max. consumption		0.1 A
Operating temperature		-15 °C / +70 °C (5 °F to 158 °F)
Storage temperature		-20 °C / +85 °C (-4 °F to 185 °F)
Relative humidity in operation		15–90 %
Altitude of use		0–2000 m (0–6500 ft)
Degree of pollution (IEC 60664-1)		3
Overvoltage category		OVC III
Commercial Reference Number		
PowerLogic™ HeatTag Sensor		SMT10020

PB120573

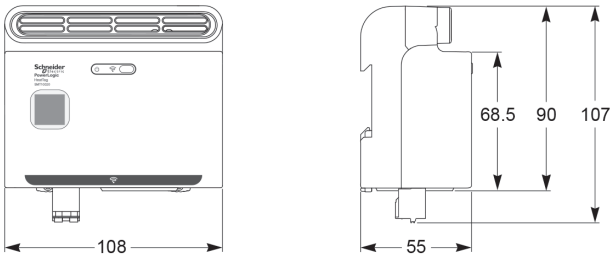

HeatTag sensor dimensions. See the appropriate **Installation Guide**.

PB120572

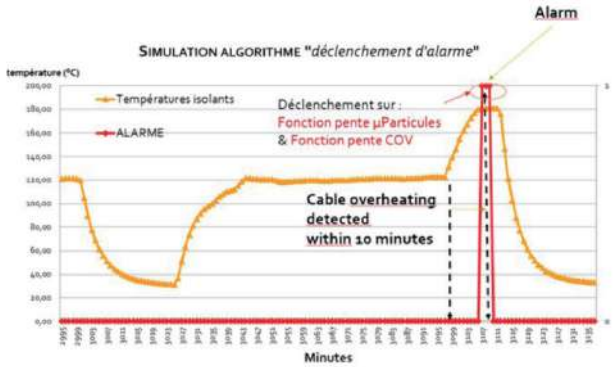

HeatTag simulation algorithm display

NOTE: Do not use HeatTag as a safety device or to replace fire protection devices. Please see the appropriate **User Guide** for this product.

Basic Multi-function Metering

A range of meters designed for cost management and simple network management. Affordable to buy and easy to choose, the highly-capable PowerLogic™ PM5000 and PM5350 series meters are designed to provide the best combination of features to match all your energy cost management needs.

As well as pin-point energy savings, optimal equipment efficiency and utilisation, basic multi-function meters perform a high level assessment of the power quality in an electrical network.

- PowerLogic™ PM5000
- PowerLogic™ PM5350
- PowerLogic™ PM5350IB
- PowerLogic™ PM5350PB
- PowerLogic™ PM5350P

PB117510

METSEPM5110

PB111770

METSEPM5560

PowerLogic™ PM5000 series

The PowerLogic™ PM5000 series power meters are the new benchmark in affordable, precision metering.

The value you want, the precision you need. Compact, affordable power meters with high-end cost capabilities and basic mobile energy management.

Applications

Capable of essential cost management:

- Sub-billing/tenant metering [+1]
- Equipment sub-billing
- Energy cost allocation

Also ideal for electrical network management:

- Track real-time power conditions
- Monitor control functions
- Provide basic power quality values
- Detect and capture voltage sag and swell events
- Monitor residual current
- Analyze equipment and network status
- BACnet/IP, EtherNet/IP, and DNP3.0 protocol support

PB118061

METSEPM5760

[+1] Subjected to local regulations.

The solution for

Markets that can benefit from a solution that includes PowerLogic™ PM5000 series meters:

- Buildings
- Industry
- Healthcare
- Data Center and networks
- Infrastructure

Benefits

System integrators' benefit

- Ease of integration
- Ease of setup
- Cost effectiveness

Panel builders' benefit

- Ease of installation
- Cost effectiveness
- Aesthetically pleasing
- Simplified ordering
- Low Voltage DC control power option
- Analog inputs options

End users' benefit

- Ease of use
- Precision metering & sub-billing (+2)
- Billing flexibility
- Comprehensive, consistent and superior performance
- Maximize uptime, eliminate faults, and enhance safety
- Cybersecurity features

Competitive advantages

- Easy to install and operate
- Easy for circuit breaker monitoring and control
- WAGES monitoring
- Data logging up to 16 parameters
- Power quality analysis up to 63rd harmonics
- Load management combined with alarm and timestamping
- High performance and accuracy
- Residual Current Monitoring (RCM) in PM56xx(+4) and PM57xx(+4)
- Voltage sag and swell detection with waveform capture
- MID ready compliance for legal billing application
- Onboard BACnet/IP, EtherNet/IP, and DNP3.0 protocol support
- PM5310R (+3) and PM5320R (+3) are enabled to connect with LVCT for faster installations

(+2) Subjected to local regulations.
(+3) PM5310R and PM5320R must be used with Schneider Electric's "Quick Click" 3-in-1 LVCTs.
(+4) PM5660, PM5661, PM5760, PM5761 must be used with Toroids.

Power management solutions

Schneider Electric provides innovative power management solutions to increase your energy efficiency and cost savings, maximize electrical network reliability and availability, and optimize electrical asset performance.

Conformity of standards

- BS/EN/IEC 61557-12:2018/ AMD1:2021
- BS/EN/IEC 62052-11:2020 edition 2
- IEC 62052-31:2015
- BS/EN/IEC 62053-22:2020 edition 2
- BS/EN/IEC 62053-23:2020 edition 2
- IEEE 802.3
- EN 50470-1:2006
- EN 50470- 3:2006
- CE and UKCA as per IEC/BS 61010-1 edition 3
- cULus as per UL 61010-1 edition 3
- BS/EN/IEC 61010-2-30:2017
- BS/EN/IEC 61326-1: edition 3
- FCC part 15 Class B
- EN 55022 Class B
- BACnet/IP - BTL listed (B-ASC)
- EtherNet/IP - ODVA certified
- ANSI C12.1-2008 (PM55xx)
- ANSI C12.20 Class 0.2 & 0.5
- Align with cyber security guidelines as per IEC 62443
- Type A as per IEC 62020 for RCM

Meets IEC 61557-12 PMD/[SD|SS]/K70/0.5 for PM5100 and PM5300
Meets IEC 61557-12 PMD/[SD|SS]/K70/0.2 for PM5500, PM5600, PM5700

- Legal billing compliance
  - MID compliance is compulsory for billing applications across Europe
  - In addition to billing applications, for facility managers responsible for energy cost
  - MID means same level of quality as a billing meter

MID Certified according to MID Directive, Annex "B" + Annex "D" for legal metrology relevant to active electrical energy meters (see Annex MI-003 of MID). Can be used for fiscal (legal) metrology.

MID ready compliance, EN 50470-1/3 – Class C

PM5000 series

PB118062

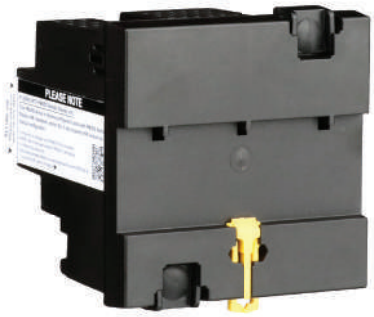

PowerLogic™ PM5563 meter

PB118063

PowerLogic™ PM5563 remote display front ISO

PB118064

PowerLogic™ PM5563 remote display rear ISO

PowerLogic™ PM5100, PM5300 and PM5500 series

The PowerLogic™ PM5000 power meter is the ideal fit for cost management applications. Designed for use in both energy management systems and building management systems, it provides the measurement capabilities needed to allocate energy usage, perform tenant metering and sub-billing, pin-point energy savings, optimize equipment efficiency and utilization, and perform a high level assessment of the power quality of the electrical network.

In a single 96 x 96 mm unit, with a graphical display, (plus optional remote display) all three phases, neutral and ground can be monitored simultaneously. The bright, anti-glare display features large characters and powerful backlighting for easy reading even in extreme lighting conditions and viewing angles. Easy to understand menus, text in 8 selectable languages, icons and graphics create a friendly environment to learn about your electrical network. Ethernet gateway and enhanced cyber security. These are highly accurate devices with global billing certifications.

Applications

- Cost management: Cost saving opportunities become clear once you understand how and when your facility uses electricity. The PowerLogic™ PM5000 series meters are ideal for:
  - Sub-billing / tenant metering: Allows a landlord, property management firm, condominium association, homeowners association, or other multi-tenant property to bill tenants for individual measured utility (electricity) usage depending on the local regulations. MID approved meters for billing applications across Europe.
  - Cost allocation: Allocate energy costs between different departments (HVAC, indoor and outdoor lighting, refrigeration, etc.), different parts of an industrial process or different cost centres. Cost allocation systems can help you save money by making changes to your operation, better maintaining your equipment, taking advantage of pricing fluctuations, and managing your demand.
- Network management: Improving reliability of the electrical network is key for success in any business. Monitoring values such as voltage levels, harmonics distortions, voltage unbalance, residual current, voltage sag and swell will help you to ensure proper operation and maintenance of your electrical network and equipment. PowerLogic™ PM5000 series meters are the perfect tool for:
  - Basic Power Quality monitoring: Power quality phenomena can cause undesirable effects such as heating in transformers, capacitors, motors, generators and misoperation of electronic equipment and protection devices.
  - Min/ Max monitoring (with timestamp): Understanding when electrical parameters, such as voltage, current and power demand, reach maximum and minimum values will give you the insight to correctly maintain your electrical network and assure equipment will not be damaged.
  - Alarming: alarms help you to be aware of any abnormal behaviour on the electrical network in the moment it happens.
  - WAGES monitoring: take advantage of the input metering on PM5000 meters to integrate measurements from third party devices such as water, air, gas, electricity or steam meters.
  - Residual current monitoring: measures leakage current flowing in TN & TT network system.
  - Voltage sags and swells: measures and captures wave form in the event of voltage sags and swells in the network.

- Main characteristics
  - Easy to install
    - Mounts using two clips, in standard cut out for DIN 96 x 96 mm, no tools required. Compact meter with 72 mm (77 mm for PM5500) depth connectable up to 690 V L-L without voltage transformers for installations compliant with category III. Optional remote display (PM5563). Ethernet gateway functionality via RS-485 port.
  - Easy to operate
    - Intuitive navigation with self-guided, language selectable menus, six lines, four concurrent values. Two LEDs on the meter face help the user confirm normal operation with a green LED - heartbeat/communications indicator, and the amber LED - customizable either for alarms or energy pulse outputs. Onboard web pages (PM5500) show real-time and logged information, and verify communications.
  - Easy circuit breaker monitoring and control
    - The PM5300 provides two relay outputs (high performance Form A type) with capability to command most of the circuit breaker coils directly. For Digital Inputs, monitored switches can be wired directly to the meter without external power supply by using whetting output voltage.
    - PM5500 series have 4 status inputs (digital) and 2 digital output (solid state) to use for WAGES monitoring, control and alarm annunciation.

Accurate energy measurement for precise cost allocation:

	PM5100	PM5300	PM5500	PM5600	PM5700
IEC 62053-22 (Active Energy)	Class 0.5S	Class 0.5S	Class 0.2S	Class 0.2S	Class 0.2S
IEC 62053-23 (Reactive Energy)	Class 1.0	Class 1.0	Class 1.0	Class 1.0	Class 1.0

PM5000 series

PB111777

PowerLogic™ PM5500 meter

PB111772

PowerLogic™ PM5300 meter

PB111768

PowerLogic™ PM5100 meter

Native multi-protocol support

The PM55/PM56/PM5700 is now easier than ever to integrate into new and existing BMS systems. With native BACnet/IP protocol support, meters can simultaneously communicate via BACnet and Modbus in applications where multiple software systems are used (building management and energy management systems).

The PM55/PM56/PM5700 series has been tested and certified in accordance with BACnet Testing Laboratories (BTL) requirements and Ethernet IP protocol as per ODVA requirements.

- PM55/PM56/PM5700 Direct metering of neutral current
  - The PM55/PM56/PM5700 has a fourth CT for measuring neutral current. In demanding IT applications, where loads are non-linear (i.e. switching power supplies on computers/servers), measuring neutral current is essential to avoid overload and resulting outage.
  - Power Quality analysis
  - The PM5000 offers Total Harmonic Distortion (THD/thd), Total Demand
  - Distortion (TDD) measurements and individual harmonics (odd) magnitudes and angles for voltage and current:

	PM5100	PM5300	PM55/56/5700
Individual Harmonics	magnitudes up to 15th	magnitudes up to 31st	magnitudes & angles up to 63rd

  - These types of power quality parameters help to identify the source of harmonics that can harm transformers, capacitors, generators, motors and electronic equipment.
- Load management
  - Peak demands with time stamping are provided. Predicted demand values can be used in combination with alarms for basic load shedding applications.
- Alarming with time stamping
  - A different combination of set point driven alarms and digital alarms with 1s time stamping are available in the PM5000 family:

	PM5100	PM5300	PM55/56/5700
Set point driven alarms	29	29	29 or 33*
Unary	4	4	4
Digital	–	2	4 or 2
Boolean / Logic	–	–	10
Custom defined	–	–	5

*Applicable in specific meter models. 2 alarms for disturbance (Sag/ Swell).

  - Alarms can be visualized as Active (the ones that have picked up and did not drop out yet) or Historical (the ones that happened in the past). Alarms can be programmed and combined to trigger digital outputs and mechanical relays (PM5300).
  - The PM5000 series keeps an alarm log with the active and historical alarms with date and time stamping. SMTP protocol for receiving alarm conditions via email and text. SNTP protocol for date/time network synchronization.
- Load timer
  - A load timer can be set to count load running hours based on a minimum current withdraw, adjustable to monitor and advise maintenance requirements on the load.
- High Performance and accuracy
  - IEC 61557-12 Performance measuring and monitoring devices (PMD). Defines the performance expectation based on classes. It defines the allowable error in the class for real and reactive power and energy, frequency, current, voltage, power factor, voltage unbalance, voltage and current harmonics (odds), voltage THD, current THD, as well as ratings for temperature, relative humidity, altitude, start-up current and safety. It makes compliant meters readings comparable - they will measure the same values when connected to the same load.

PM5000 series

PM5000 series feature selection

	PM5100		PM5300					
	PM5100	PM5110	PM5310	PM5310R (+5)	PM5320	PM5320R (+5)	PM5330	PM5340
Installation								
Fast installation, panel mount with integrated display	■	■	■	■	■	■	■	■
Fast installation, DIN rail mountable	–	–	–	–	–	–	–	–
Accuracy								
Class	CL 0.5S	CL 0.5S	CL 0.5S	CL 0.5S	CL 0.5S	CL 0.5S	CL 0.5S	CL 0.5S
Display								
Backlit LCD, multilingual, bar graphs, 6 lines, 4 concurrent values	■	■	■	■	■	■	■	■
Power and energy metering								
3-ph voltage, current, power, demand, energy, frequency, power factor	■	■	■	■	■	■	■	■
Multi-tariff	–	–	4	4	4	4	4	4
MID ready compliance, EN50470-1/3, Annex B & Annex D Class C	–	PM5111	–	–	–	–	PM5331	PM5341
Power quality analysis								
THD, thd, TDD	■	■	■	■	■	■	■	■
Harmonics, individual (odd) up to	15th	15th	31st	31st	31st	31st	31st	31st
Waveform capture & sag/ swell detection	–	–	–	–	–	–	–	–
I/Os and relays								
Digital inputs/ Digital output	1DO	1DO	2DI/2DO	2DI/2DO	2DI/2DO	2DI/2DO	2DI/2DO	2DI/2DO
Relays	–	–	–	–	–	–	2	2
Analog inputs	–	–	–	–	–	–	–	–
Residual Current inputs	–	–	–	–	–	–	–	–
Alarms and control								
Alarms	33	33	35	35	35	35	35	35
Set point response time, seconds	1	1	1	1	1	1	1	1
Single and multi-condition alarms	–	–	■	■	■	■	■	■
Boolean alarm logic	–	–	–	–	–	–	–	–
Memory for data logging	–	–	256KB	256KB	256KB	256KB	256KB	256KB
Communications								
Serial ports with modbus protocol	–	1	1	1	–	–	1	–
Ethernet port with Modbus TCP protocol	–	–	–	–	1	1	–	1
BACnet/IP protocol	–	–	–	–	■	■	–	■
EtherNet/IP protocol	–	–	–	–	–	–	–	–
DNP3.0 over Ethernet	–	–	–	–	–	–	–	–
Onboard web server with web pages	–	–	–	–	–	–	–	–
Serial to Ethernet gateway	–	–	–	–	–	–	–	–
Ref. number followed with METSE*	PM5100	PM5110	PM5310	PM5310R (+5)	PM5320	PM5320R (+5)	PM5330	PM5340
*See table below for complete commercial reference numbers								

(+5) PM5310R and PM5320R must be used with Schneider Electric's "Quick Click" 3-in-1 LVCTs

PM5000 series

PM5000 series feature selection

	PM5500					PM5600		PM5700
	PM5560	PM5563	PM5563RD	PM5570	PM5580	PM5650	PM5660	PM5760
Installation								
Fast installation, panel mount with integrated display	■	–	–	■	■	■	■	■
Fast installation, DIN rail mountable	–	■	■	–	–	–	–	–
Accuracy								
Class	CL 0.2S	CL 0.2S	CL 0.2S	CL 0.2S	CL 0.2S	CL 0.2S	CL 0.2S	CL 0.2S
Display								
Backlit LCD, multilingual, bar graphs, 6 lines, 4 concurrent values	■	–	■	■	■	■	■	■
Power and energy metering								
3-ph voltage, current, power, demand, energy, frequency, power factor	■	■	■	■	■	■	■	■
Multi-tariff	8	8	8	8	8	8	8	8
MID ready compliance, EN50470-1/3, Annex B & Annex D Class C	PM5561	–	–	–	–	–	PM5661	PM5761
Power quality analysis								
THD, thd, TDD	■	■	■	■	■	■	■	■
Harmonics, individual (odd) up to	63rd	63rd	63rd	63rd	63rd	63rd	63rd	63rd
Waveform capture & sag/ swell detection	–	–	–	–	–	8 cycles @ 128 samples/cycle	–	8 cycles @ 128 samples/cycle
I/Os and relays								
Digital inputs/ solid state Digital output	4DI/2DO	4DI/2DO	4DI/2DO	2DI/2DO	4DI/2DO	4DI/2DO	2DI/2DO	2DI/2DO
Relays	–	–	–	–	–	–	–	–
Analog inputs	–	–	–	2	–	–	–	–
Residual Current inputs	–	–	–	–	–	–	2	2
Alarms and control								
Alarms	52	52	52	50	52	54	54	56
Set point response time, seconds	1	1	1	1	1	1	1	1
Single and multi-condition alarms	■	■	■	■	■	■	■	■
Boolean alarm logic	■	■	■	■	■	■	■	■
Memory for data logging	1.1 MB	1.1 MB	1.1 MB	1.1 MB	1.1 MB	1.1 MB	1.1 MB	1.1 MB
Communications								
Serial ports with modbus protocol	1	1	1	1	1	1	1	1
Ethernet port with Modbus TCP protocol	2 (+6)	2 (+6)	2 (+6)	2 (+6)	2 (+6)	2 (+6)	2 (+6)	2 (+6)
BACnet/IP protocol	■	■	■	■	■	■	■	■
EtherNet/IP protocol	■	■	■	■	■	■	■	■
DNP3.0 over Ethernet	■	■	■	■	■	■	■	■
Onboard web server with web pages	■	■	■	■	■	■	■	■
Serial to Ethernet gateway	■	■	■	■	■	■	■	■
Ref. numbers with METSE*	PM5560	PM5563	PM5563RD	PM5570	PM5580	PM5650	PM5660	PM5760
*See table below for complete commercial reference numbers								

(+6) 2 Ethernet ports for daisy chain, one IP address.

PM5000 series

PM5000 technical specifications

		PM5100	PM5300	PM5500	PM5600	PM5700
Use on LV and MV systems		■				
Basic metering with THD and min/max readings		■				
Instantaneous rms values						
Current	Average, per phase, neutral and ground (PM5500)	■				
Voltage	Average, per phase L–L and L–N	■				
Frequency	Any available phase	■				
Real, reactive, and apparent power	Total and per phase	Signed, Four Quadrant				
True Power Factor	Average and per phase	Signed, Four Quadrant				
Displacement PF	Average and per phase	Signed, Four Quadrant				
% Unbalanced I, V L-N, V L-L		■				
Direct monitoring of neutral current		–		■	■	■
Energy values						
Accumulated Active, Reactive and Apparent Energy		Received/Delivered; Net and absolute; Time Counters				
Demand value						
Current average		Present, Last, Predicted, Peak, and Peak Date Time				
Active power		Present, Last, Predicted, Peak, and Peak Date Time				
Reactive power		Present, Last, Predicted, Peak, and Peak Date Time				
Apparent power		Present, Last, Predicted, Peak, and Peak Date Time				
Peak demand with timestamping D/T for current and three powers		■				
Demand calculation	Sliding, fixed and rolling block, thermal methods	■				
Synchronisation of the measurement window to input, communication command or internal clock		■				
Settable Demand intervals		■				
Demand synchronization with pulse input		–	■			
Other measurements						
I/O timer		■				
Operating timer		■				
Load timer		■				
Alarm counters and alarm logs		■				
Power quality measurements						
THD, thd (Total Harmonic Distortion) I, V L-N, V L-L		I, V L-N, V L-L				
TDD (Total Demand Distortion)		■				
Individual harmonics (odds)		15th (PM5110)	31st	63rd		
Neutral Current metering with ground current calculation		–	–	■		
Waveform capture and sag/swell detection		–	–	–	8 cycles @ 128 samples/cycle	
Data recording						
Min/max of instantaneous values, plus phase identification (+7)		■				
Alarms with 1s timestamping (+7)		■				
Data logging			2 fixed parameters kWh and kVAh with configurable interval & duration (e.g. 2 parameters for minimum 60 days at 15–minute intervals)	Up to 14 selectable parameters with configurable interval and duration (e.g. 6 parameters for minimum 90 days at 15–minute intervals)		
Min/max log		■	■	■		
Maintenance, alarm and event logs			■	■		
Customisable data logs		–		■		
RTC with battery back up		3 years (when meter is in Power OFF condition)				
Display resolution		5 digits for Energy and other parameters with auto scaling				
Preset Energy and Energy scaling		Available in selected references				

(+7) Stored in non-volatile memory

PM5000 series

PM5000 technical specifications

		PM5100	PM5300	PM5500	PM5600	PM5700
Inputs / Outputs / Mechanical Relays						
Digital inputs		–	2	4 in PM5560, PM5561, PM5562, PM5563, PM5580, PM5650 2 in PM5570, PM5660, PM5661, PM5760, PM5761		
Digital outputs		1 (kWh only)	2	2 (Solid state)		
Form A Relay outputs		–	2	–		
Analog inputs		–	–	2 for PM5570	–	–
Residual Current inputs		–	–		2 for PM5660	2 for PM5760
Timestamp resolution in seconds		1	1	1	1	1
Whetting source		–	24 V DC, 8 mA	–	–	–
Type of measurement: True rms on three-phase (3P, 3P + N)		64 samples per cycle		128 samples per cycle		
Measurement accuracy	IEC 61557-12	PMD/[SD|SS]/K70/0.5		PMD/[SD|SS]/K70/0.2		
	Active Energy	Class 0.5S as per IEC 62053-22/ Class 0.5 as per IEC 61557-12/ ± 0.5%		Class 0.2S as per IEC 62053-22/ Class 0.2 as per IEC 61557-12/ ± 0.2%		
	Reactive Energy	Class 2 as per IEC 62053-23/ Class 1.0 as per IEC 61557-12/ ± 1.0%		Class 2 as per IEC 62053-23/ Class 1.0 as per IEC 61557-12/ ± 1.0%		
	Active Power	Class 0.5 as per IEC 61557-12/ ± 0.5%		Class 0.2 as per IEC 61557-12/ ± 0.2%		
	Apparent Power	Class 0.5 as per IEC 61557-12/ ± 0.5%		Class 0.5 as per IEC 61557-12/ ± 0.5%		
	Reactive Power	Class 1.0 as per IEC 61557-12/ ± 1.0%		Class 1.0 as per IEC 61557-12/ ± 1.0%		
	Current, Phase	Class 0.5 as per IEC 61557-12/ ±0.5 %		Class 0.2 as per IEC 61557-12/ ±0.15 %		
	Voltage, L-N	Class 0.5 as per IEC 61557-12/ ± 0.5 %		Class 0.2 as per IEC 61557-12/ ± 0.1 %		
	Frequency	Class 0.05 as per IEC 61557-12/ ±0.05 %		Class 0.05 as per IEC 61557-12/ ±0.05 %		
	Power Factor	Class 0.5 as per IEC 61557-12/ ±0.005 count		Class 0.5 as per IEC 61557-12/ ±0.005 count		
	Voltage unbalance	Class 5/ ±5%		Class 2/ ±2%		
	Voltage harmonics	Class 5/ ±5%		Class 2/ ±2%		
	Voltage THD Class	Class 5/ ±5%		Class 2/ ±2%		
	Current harmonics	Class 5/ ±5%		Class 2/ ±2%		
	Current THD Class	Class 5/ ±5%		Class 2/ ±2%		
	MID Directive EN50470-1, EN50470-3	Annex B and Annex D (Optional model references) Class C				
Input-voltage (up to 1.0 MV AC max, with voltage transformer)	Nominal Measured Voltage range	20 V L-N / 35 V L-L to 400 V L-N /690 V L-L absolute range 35 V L-L to 760 V L-L		20 V L-N / 20 V L-L to 400 V L-N /690 V L-L absolute range 20 V L-L to 828 V L-L		
	Impedance	5 MΩ				
	Frequency nominal	50 or 60 Hz ±5 %		50 or 60 Hz ±10 %		
Input-current (configurable for 1 or 5 A secondary CTs)	I nominal	5 A				–
	Measured Amps with over range	Starting current: 5 mA Operating range: 50 mA to 8.5 A		Starting current: 5 mA Operating range: 50 mA to 10 A (with Crest Factor)		
	Withstand	Continuous 20 A, 10 s/hr 50 A, 1 s/hr 500 A				
	Impedance	< 0.3 mΩ				
	Frequency nominal	50 or 60 Hz ±5 %		50 or 60 Hz ±10 %		
	Burden	<0.026 VA at 8.5 A				
AC control power	Operating range	100 - 277 V AC L-N / 415 V L-L +/-10 % CAT III 300V class per IEC 61010		100-480 V AC ±10 % CAT III 600V class per IEC 61010		
	Burden	<5 W,11 VA at 415V L-L		<5W/16.0 VA at 480 V AC		
	Frequency	45 to 65 Hz				
	Ride through time at maximum burden	80 mS typical at 120V AC 100 mS typical at 230 V AC 100 mS typical at 415 V AC		35 ms typical at 120 V L-N 129 ms typical at 230 V L-N		
DC control power	Operating range	125–250 V DC ±20 % (100 to 300 V DC)				
	Burden	<4 W at 250 V DC		typical 3.1 W at 125 V DC, max. 5 W		
	Ride-through time	50 mS typical at 125 V DC and maximum burden				
LV DC control power	20-60 V DC ±10 % CAT III Burden 4.1 W max.	–	–	■ PM5580	–	–

PM5000 series

PM5000 technical specifications

			PM5100	PM5300	PM5500	PM5600	PM5700
Outputs	Relay outputs	Max output frequency	–	0.5 Hz maximum (1 s ON / 1 s OFF - min times)	–	–	–
		Switching current, at resistive load	–	250 V AC at 8.0 Amps, 25 k cycles 30 V DC at 2.0 Amps, 75 k cycles 30 V DC at 5.0 Amps, 12.5 k cycles	–	–	–
		Isolation	–	2.5 kV rms	–	–	–
	Digital outputs	Max load voltage	40 V DC		40 V AC / 60 V DC (PM5500 and PM 5650) 30 V AC / 40 V DC (PM5660, PM5661, PM5760, PM5761)		
		Max load current	20 mA		125 mA (Solid state)		
		On Resistance	50 Ω max		8 Ω		
		Meter constant	from 1 to 9,999,999 pulses per k_h (kWh, kVAh, kVARh)				
		Pulse width for Digital Output	50 % duty cycle				
		Pulse frequency for Digital Output	25 Hz max.				
		Leakage current	0.3 micro Amps		1 micro Amps		
		Isolation	5 kV rms		2.5 kV rms for 60 s		
	Optical outputs	Pulse width (LED)	200 ms				
		Pulse frequency	2.5 kHz. max		2.5 kHz. max		
		Meter constant	from 1 to 9,999,999 pulses per k_h (kWh, kVAh, kVARh)				
Status Inputs	ON Voltage		–	18.5 to 36 V DC	15 to 30 V AC / 15 to 60 V DC max		
	OFF Voltage		–	0 to 4 V DC	0 to 6 V AC / 0 to 6 V DC		
	Input Resistance		–	110 k Ω	100 k Ω		
	Maximum Frequency		–	2 Hz (T ON min = T OFF min = 250 ms)	25 Hz (T ON min = T OFF min = 20 ms)		
	Response Time		–	20 ms	10 ms		
	Opto Isolation		–	5 kV rms	2.5 kV rms for 60 s		
	Whetting output		–	24 V DC/ 8 mA max	-		
	Input Burden		–	2 mA @24V DC	2 mA @ 24 V AC/DC 2.5 mA @ 60 V AC/DC		
Analog inputs (PM5570)			–		4 - 20 mA DC (nominal), Accuracy: 1% of full-scale reading, Impedance < 20 Ω, Operating voltage: 24 V DC max	–	
Residual Current inputs (PM5660, PM5661, PM5760, PM5761) Type A as per IEC 62020			–			5 uA to 1200 uA (nominal), 1500 uA max (continuous), Input type: AC 45 to 65 Hz, Burden: 150 Ω, Default toroid: 1000 turns	
Mechanical characteristics							
Product weight			380 g	430 g	450 g	450 g	450 g
IP degree of protection (IEC 60529)			IP54 front display, IP30 rear side (IP65 front side with Optional accessory kit METSEIP65OP96X96FF)				
Dimensions W x H x D [protrusion from cabinet]			96 x 96 x 72 mm (77 mm for PM5500) (depth of meter from housing mounting flange) [13 mm]				
Mounting position			Vertical				
Panel thickness			6 mm maximum				
LVCT (+8) inputs for PM5310R and PM5320R - Nominal voltage of 0.333V							
Measurement range			-	0.00333V - 0.4V	-	-	-

(+8) PM5310R and PM5320R must be used with Schneider Electric's "Quick Click" 3-in-1 LVCTs

PM5000 series

PM5000 technical specifications

		PM5100	PM5300	PM5500	PM5600	PM5700
Environmental characteristics						
Operating temperature	Operating temperature	-25 °C to 70 °C				
	Display (reduced display performance at -25 ° C)	-25 °C to 70 °C				
Storage temperature		-40 °C to 85 °C				
Humidity range		5 to 95 % RH at 50 °C (non-condensing)				
Pollution degree		2				
Altitude		2000 m CAT III / 3000 m CAT II		3000 m max. CAT III		
Mission profile / Life span		>15 years				
Protective treatment		Conformal coating				
Electromagnetic compatibility						
Harmonic current emissions		–	–	IEC 61000-3-2		
Flicker emissions		–	–	IEC 61000-3-3		
Electrostatic discharge		IEC 61000-4-2				
Immunity to radiated fields		IEC 61000-4-3				
Immunity to fast transients		IEC 61000-4-4				
Immunity to surge		IEC 61000-4-5				
Conducted immunity 150 kHz to 80 MHz		IEC 61000-4-6				
Immunity to magnetic fields		IEC 61000-4-8				
Immunity to voltage dips		IEC 61000-4-11				
Immunity to damped oscillatory waves		–	–	IEC 61000-4-12		
Radiated and conducted emissions		FCC part 15, EN 55022 Class B				
Safety						
Europe		CE, as per IEC 61010-1 Ed. 3, IEC 62052-11 & IEC 61557-12				
U.S. and Canada		cULus as per UL 61010-1 (Edition 3)				
Measurement category (Voltage & Current inputs)		CAT III up to 400 V L-N / 690 V L-L				
Dielectric		As per IEC/UL 61010-1 (Edition 3)				
Protective Class		II, Double insulated for user accessible parts				
Communication						
RS-485 port Modbus RTU, Modbus ASCII (7 or 8 bit), JBUS		2-Wire, 9600,19200 or 38400 baud, Parity - Even, Odd, None, 1 stop bit if parity Odd or Even, 2 stop bits if None; (Optional in PM51x and PM53x)				
Ethernet port: 10/100 Mbps; Modbus TCP/IP		–	1 Optional	2 (daisy chain only, 1 IP address)		
Native Ethernet/IP & DNP3.0 over Ethernet		–	–	Yes	Yes	Yes
FTP / FTPS		–	–	Yes	Yes	Yes
SNMP, SNTP, SMTP		–	–	Yes	Yes	Yes
HTTPS		–	–	Yes	Yes	Yes
Firmware and language file update		Meter firmware update via the communication ports				
Isolation		2.5 kVrms, double insulated				
Human machine interface						
Display type		Monochrome Graphics LCD				
Resolution		128 x 128 pixels				
Backlight		White LED				
Viewable area (W x H)		67 x 62.5 mm				
Keypad		4-button				
Indicator Heartbeat / Communication activity		Green LED				
Energy pulse output / Active alarm (configurable)		Optical, amber LED				
Wavelength		590 to 635 nm				
Maximum pulse rate		2.5 kHz				

PM5000 series

Comm. ref numbers	Description
METSEPM5100	Power Meter, 600V AC L-L/ 5A or 1A input, 415V AC L-L or 250V DC control power, Cl 0.5S, 15th harmonic, 1DO
METSEPM5110	Power Meter, 600V AC L-L/ 5A or 1A input, 415V AC L-L or 250V DC control power, Cl 0.5S, 15th harmonic, 1DO, RS-485
METSEPM5111	Power Meter, 600V AC L-L/ 5A or 1A input, 415V AC L-L or 250V DC control power, Cl 0.5S, 15th harmonic, 1DO, RS-485, MID
METSEPM5310	Power Meter, 600V AC L-L/ 5A or 1A input, 415V AC L-L or 250V DC control power, Cl 0.5S, 31st harmonic, 256 kB, 2DI/2DO, RS-485
METSEPM5310R	Power Meter, 600V AC L-L/ RJ45 LVCT input, 415V AC L-L or 250V DC control power, Cl 0.5S, 31st harmonic, 256 kB, 2DI/2DO, RS-485
METSEPM5320	Power Meter, 600V AC L-L/ 5A or 1A input, 415V AC L-L or 250V DC control power, Cl 0.5S, 31st harmonic, 256 kB, 2DI/2DO, Ethernet
METSEPM5320R	Power Meter, 600V AC L-L/ RJ45 LVCT input, 415V AC L-L or 250V DC control power, Cl 0.5S, 31st harmonic, 256 kB, 2DI/2DO, Ethernet
METSEPM5330	Power Meter, 600V AC L-L/ 5A or 1A input, 415V AC L-L or 250V DC control power, Cl 0.5S, 31st harmonic, 256 kB, 2DI/2DO/2-Relay, RS-485
METSEPM5331	Power Meter, 600V AC L-L/ 5A or 1A input, 415V AC L-L or 250V DC control power, Cl 0.5S, 31st harmonic, 256 kB, 2DI/2DO/2-Relay, RS-485, MID
METSEPM5340	Power Meter, 600V AC L-L/ 5A or 1A input, 415V AC L-L or 250V DC control power, Cl 0.5S, 31st harmonic, 256 kB, 2DI/2DO/2-Relay, Ethernet
METSEPM5341	Power Meter, 600V AC L-L/ 5A or 1A input, 415V AC L-L or 250V DC control power, Cl 0.5S, 31st harmonic, 256 kB, 2DI/2DO/2-Relay, Ethernet, MID
METSEPM5560	Power Meter, 690V AC L-L/ 5A or 1A input, 480V AC L-L or 250V DC control power, Cl 0.2S, 63rd harmonic, 1.1 MB, 4DI/2-DO, RS-485, Ethernet
METSEPM5561	Power Meter, 690V AC L-L/ 5A or 1A input, 480V AC L-L or 250V DC control power, Cl 0.2S, 63rd harmonic, 1.1 MB, 4DI/2-DO, RS-485, Ethernet, MID
METSEPM5562	Power Meter, 690V AC L-L/ 5A or 1A input, 480V AC L-L or 250V DC control power, Cl 0.2S, 63rd harmonic, 1.1 MB, 4DI/2-DO, RS-485, Ethernet, RMI CAN approved, Hardware lockable
METSEPM5562MC	Power Meter, 690V AC L-L/ 5A or 1A input, 480V AC L-L or 250V DC control power, Cl 0.2S, 63rd harmonic, 1.1 MB, 4DI/2-DO, RS-485, Ethernet, RMI CAN approved, Factory sealed
METSEPM5563	Power Meter, 690V AC L-L/ 5A or 1A input, 480V AC L-L or 250V DC control power, Cl 0.2S, 63rd harmonic, 1.1 MB, 4DI/2-DO, RS-485, Ethernet, DIN mount, No display
METSEPM5563RD	Power Meter, 690V AC L-L/ 5A or 1A input, 480V AC L-L or 250V DC control power, Cl 0.2S, 63rd harmonic, 1.1 MB, 4DI/2-DO, RS-485, Ethernet, DIN mount, Remote display
METSEPM5570	Power Meter, 690V AC L-L/ 5A or 1A input, 480V AC L-L or 250V DC control power, Cl 0.2S, 63rd harmonic, 1.1 MB, 2DI/2AI/2-DO, RS-485, Ethernet
METSEPM5580	Power Meter, 690V AC L-L/ 5A or 1A input, 24 to 64V DC control power, Cl 0.2S, 63rd harmonic, 1.1 MB, 4DI/2-DO, RS-485, Ethernet
METSEPM5650	Power Meter, 690V AC L-L/ 5A or 1A input, 480V AC L-L or 250V DC control power, Cl 0.2S, 63rd harmonic, 1.1 MB, 4DI/2-DO, RS-485, Ethernet, Wave Form Capture and Sag/swell
METSEPM5660	Power Meter, 690V AC L-L/ 5A or 1A input, 480V AC L-L or 250V DC control power, Cl 0.2S, 63rd harmonic, 1.1 MB, 2DI/2-DO, RS-485, Ethernet, Residual Current Monitor
METSEPM5661	Power Meter, 690V AC L-L/ 5A or 1A input, 480V AC L-L or 250V DC control power, Cl 0.2S, 63rd harmonic, 1.1 MB, 2DI/2-DO, RS-485, Ethernet, Residual Current Monitor, MID
METSEPM5760	Power Meter, 690V AC L-L/ 5A or 1A input, 480V AC L-L or 250V DC control power, Cl 0.2S, 63rd harmonic, 1.1 MB, 2DI/2-DO, RS-485, Ethernet, Wave Form Capture and Sag/swell, Residual current monitor
METSEPM5761	Power Meter, 690V AC L-L/ 5A or 1A input, 480V AC L-L or 250V DC control power, Cl 0.2S, 63rd harmonic, 1.1 MB, 2DI/2-DO, RS-485, Ethernet, Wave Form Capture and Sag/swell, Residual current monitor, MID

For selection of compatible current transformers with 5 A output in Schneider range: Refer **PLSED310169EN** in solid core and split core IEC type

For Residual Current Monitoring Toroids (Vigirex) - Closed Toroids, A Type (applicable for PM5660, PM5661, PM5760, PM5761)	
50437	TA30 - closed toroid A type, for RCM enabled power meters, 30 mm inner diameter, rated current 65 Amps, 1000 turns
50438	PA50 - closed toroid A type, for RCM enabled power meters, 50 mm inner diameter, rated current 85 Amps, 1000 turns
50439	IA80 - closed toroid A type, for RCM enabled power meters, 80 mm inner diameter, rated current 160 Amps, 1000 turns
50440	MA120 - closed toroid A type, for RCM enabled power meters, 120 mm inner diameter, rated current 250 Amps, 1000 turns
50441	SA200 - closed toroid A type, for RCM enabled power meters, 200 mm inner diameter, rated current 400 Amps, 1000 turns
50442	GA300 - closed toroid A type, for RCM enabled power meters, 300 mm inner diameter, rated current 630 Amps, 1000 turns
Accessories for Closed Toroids (applicable for PM5660, PM5661, PM5760, PM5761)	
56055	Magnetic ring/ Iron screen accessory for TA30 toroid sensor
56056	Magnetic ring/ Iron screen accessory for PA50 toroid sensor
56057	Magnetic ring/ Iron screen accessory for IA80 toroid sensor
56058	Magnetic ring/ Iron screen accessory for MA120 toroid sensor
Residual Current Monitoring Toroids (Vigirex) - Split Toroids, OA Type (applicable for PM5660, PM5661, PM5760, PM5761)	
50420	TOA80 - split toroid OA type, 80 mm inner diameter, rated current 160 Amps, 1000 turns
50421	TOA120 - split toroid OA type, 120 mm inner diameter, rated current 250 Amps, 1000 turns
56053	L1 type - rectangular sensor, width 280 x height 115 mm, rated current 1600 Amps, 1000 turns
56054	L2 type - rectangular sensor, width 470 x height 160 mm, rated current 3200 Amps, 1000 turns

Current Transformer commercial reference numbers for PM53xxR

Comm. ref numbers	Description
0.333V (1/3 Volts), 3-in-1 CTs with RJ45 connectors for PM53x0R LVCT enabled power meter	
METSECTV25006	LVCT Solid core 3 in 1 with RJ45 cable, 25 mm phase center, 60 Amps, 0.333V output
METSECTV25010	LVCT Solid core 3 in 1 with RJ45 cable, 25 mm phase center, 100 Amps, 0.333V output
METSECTV25013	LVCT Solid core 3 in 1 with RJ45 cable, 25 mm phase center, 125 Amps, 0.333V output
METSECTV25016	LVCT Solid core 3 in 1 with RJ45 cable, 25 mm phase center, 160 Amps, 0.333V output
METSECTV35006	LVCT Solid core 3 in 1 with RJ45 cable, 35 mm phase center, 60 Amps, 0.333V output
METSECTV35010	LVCT Solid core 3 in 1 with RJ45 cable, 35 mm phase center, 100 Amps, 0.333V output
METSECTV35012	LVCT Solid core 3 in 1 with RJ45 cable, 35 mm phase center, 120 Amps, 0.333V output
METSECTV35013	LVCT Solid core 3 in 1 with RJ45 cable, 35 mm phase center, 125 Amps, 0.333V output
METSECTV35015	LVCT Solid core 3 in 1 with RJ45 cable, 35 mm phase center, 150 Amps, 0.333V output
METSECTV35016	LVCT Solid core 3 in 1 with RJ45 cable, 35 mm phase center, 160 Amps, 0.333V output
METSECTV35020	LVCT Solid core 3 in 1 with RJ45 cable, 35 mm phase center, 200 Amps, 0.333V output
METSECTV35025	LVCT Solid core 3 in 1 with RJ45 cable, 35 mm phase center, 250 Amps, 0.333V output
METSECTV45025	LVCT Solid core 3 in 1 with RJ45 cable, 45 mm phase center, 250 Amps, 0.333V output
METSECTV45030	LVCT Solid core 3 in 1 with RJ45 cable, 45 mm phase center, 300 Amps, 0.333V output
METSECTV45040	LVCT Solid core 3 in 1 with RJ45 cable, 45 mm phase center, 400 Amps, 0.333V output
METSECTV45050	LVCT Solid core 3 in 1 with RJ45 cable, 45 mm phase center, 500 Amps, 0.333V output
METSECTV45060	LVCT Solid core 3 in 1 with RJ45 cable, 45 mm phase center, 600 Amps, 0.333V output
METSECTV45063	LVCT Solid core 3 in 1 with RJ45 cable, 45 mm phase center, 630 Amps, 0.333V output
METSECTV29006	LVCT Solid core 3 in 1 with RJ45 cable, 29 mm phase center, 60 Amps, 0.333V output
METSECTV29010	LVCT Solid core 3 in 1 with RJ45 cable, 29 mm phase center, 100 Amps, 0.333V output
METSECTV29012	LVCT Solid core 3 in 1 with RJ45 cable, 29 mm phase center, 120 Amps, 0.333V output
METSECTV29013	LVCT Solid core 3 in 1 with RJ45 cable, 29 mm phase center, 125 Amps, 0.333V output
METSECTV29015	LVCT Solid core 3 in 1 with RJ45 cable, 29 mm phase center, 150 Amps, 0.333V output
METSECTV29016	LVCT Solid core 3 in 1 with RJ45 cable, 29 mm phase center, 160 Amps, 0.333V output
METSECTV29020	LVCT Solid core 3 in 1 with RJ45 cable, 29 mm phase center, 200 Amps, 0.333V output
METSECTV70080	LVCT Solid core 3 in 1 with RJ45 cable, 70 mm phase center, 800 Amps, 0.333V output
METSECTV70100	LVCT Solid core 3 in 1 with RJ45 cable, 70 mm phase center, 1000 Amps, 0.333V output
METSECTV70125	LVCT Solid core 3 in 1 with RJ45 cable, 70 mm phase center, 1250 Amps, 0.333V output
Cables for PM5563 and PM5563RD	
METSEPM5CAB03	RJ25 cable assembly for interfacing PM5563 meter and PM5RD remote display with 0.3 meter cable length
METSEPM5CAB1	RJ25 cable assembly for interfacing PM5563 meter and PM5RD remote display with 1.0 meter cable length
METSEPM5CAB10	RJ25 cable assembly for interfacing PM5563 meter and PM5RD remote display with 10 meter cable length
METSEPM5CAB3	RJ25 cable assembly for interfacing PM5563 meter and PM5RD remote display with 3 meter cable length
METSEPM5CAB4	RJ25 cable assembly for interfacing PM5563 meter and PM5RD remote display with 4 meter cable length
Other related products or accessories	
METSEPM5RD	Remote display unit for PM5563 power meter supplied with mounting bracket, gasket, anti-rotation pin and RJ25 cable METSEPMCABxy
METSEPM51HK	Hardware kit for PM51xx comprises 2 retainer clips and spare connectors for - Voltage in, Control power in, Digital IO & RS-485
METSEPM53HK	Hardware kit for PM51xx comprises 2 retainer clips and spare connectors for - Voltage in, Control power in, Digital IO, Relay & RS-485
METSEPM51_3RSK	Revenue sealing kit for PM51XX & PM53XX
METSEPM55RSK	Revenue sealing kit for PM55XX
METSEPM55HK	Hardware kit for PM55xx

Please contact your Schneider Electric representative for complete ordering information.

PM5000 series

PM5100/PM5300 Series meter mounting

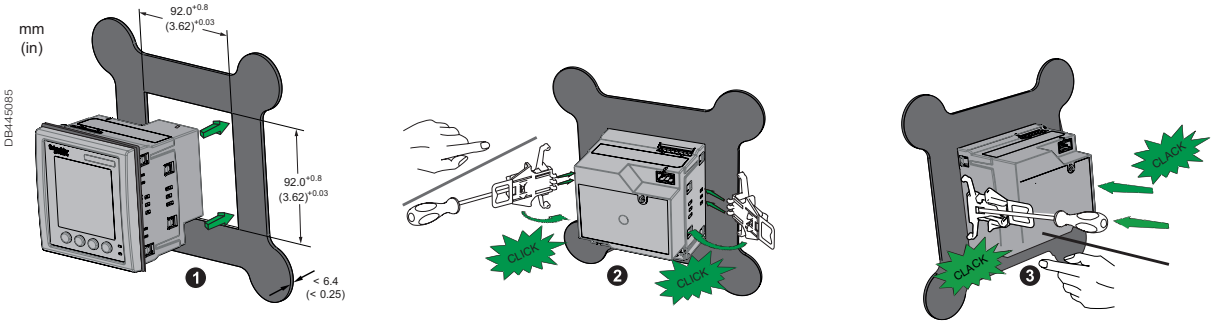

PM5500/PM5600/PM5700 series meter mounting

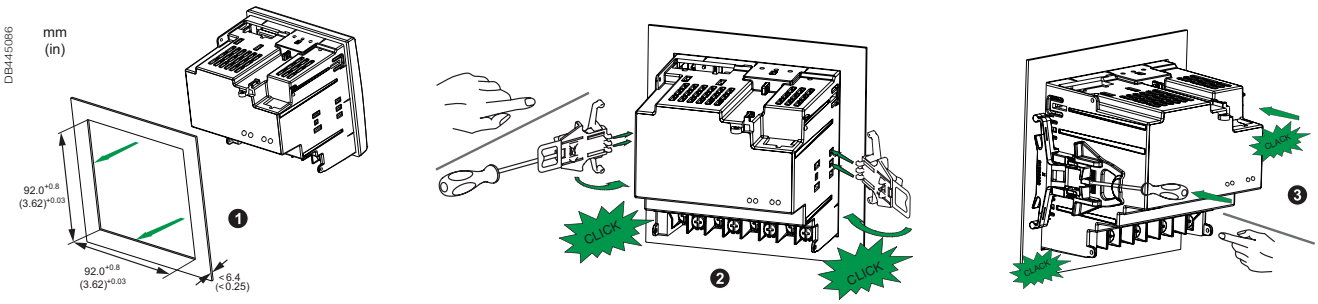

PM5000 series meter dimensions

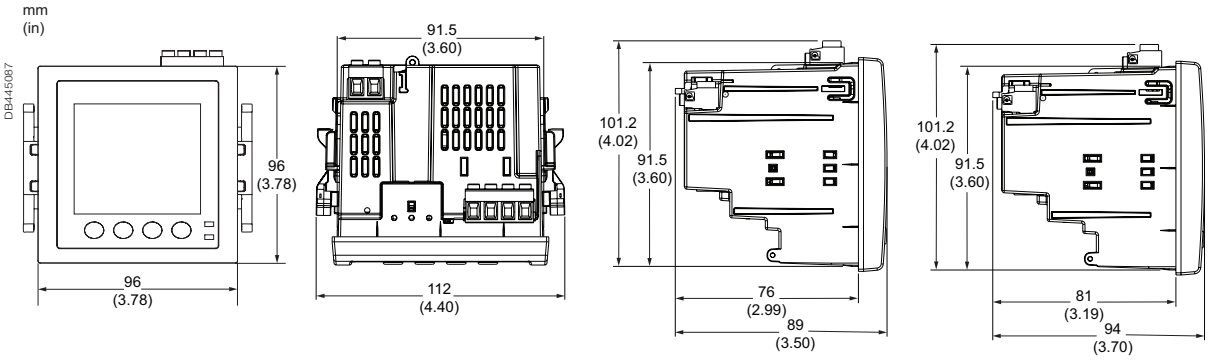

PM5100/PM5300 PM5500/PM5600/PM5700

PM5000 series overview

PM5000 meter parts

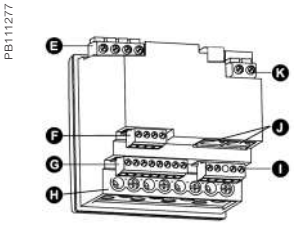

PM5500/PM5600/PM5700 meter parts

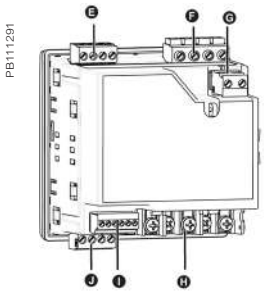

PM5100/PM5300 meter parts

- **A** Menu selection buttons
- **B** LED indicators
- **C** Navigation or menu selections
- **D** Maintenance and alarm notification area

- **E** Voltage inputs
- **F** RS-485 comms
- **G** Digital inputs
- **H** Current inputs
- **I** Digital outputs
- **J** Ethernet ports
- **K** Control power

- **E** Relay output (PM5300 only)
- **F** Voltage inputs
- **G** Control power
- **H** Current inputs
- **I** Status inputs/digital outputs
- **J** Communications port: Ethernet (PM5300 only) or RS-485)

*Please see the appropriate **Installation Guide** for accurate and complete information on the installation of this product.*

PowerLogic™ PM5350 series

The PowerLogic™ PM5350 series power meters are the new benchmark in affordable, precision metering.

The PowerLogic™ PM5350, PM5350IB, PM5350PB, and PM5350P power meters offer all the measurement capabilities required to monitor an electrical installation in a space-efficient, single 96 x 96 mm unit with small depth. DNC certifies for marine applications.

Applications

- Panel instrumentation.
- Cost allocation or energy management
- Electrical installation remote monitoring
- Sophisticated alarming
- Circuit beaker monitoring and control

PB117510

METSEPM5350P

The solution for

Markets that can benefit from a solution that includes PowerLogic™ PM5350 series meters:

- Buildings
- Industry
- Healthcare
- Data Centre and networks
- Infrastructure

Benefits

System integrators' benefit

- Ease of integration
- Ease of setup
- Cost effectiveness

Panel builders' benefit

- Ease of installation
- Cost effectiveness
- Aesthetically pleasing
- Simplified ordering

End users' benefit

- Ease of use
- Precision metering & sub-billing
- Billing flexibility
- Comprehensive, consistent and superior performance

Competitive advantages

- Easy to install and operate
- Easy for circuit breaker monitoring and control
- Power quality analysis
- Load management combined with alarm and timestamping
- High performance and accuracy
- Multi-tariff capabilities
- Individual harmonics up to 31st

Power management solutions

Schneider Electric provides innovative power management solutions to increase your energy efficiency and cost savings, maximise electrical network reliability and availability, and optimise electrical asset performance.

Conformity of standards

- IEC 62053-22
- IEC 61557-12
- IEC 62053-23
- IEC/UL 61010-1
- IEC 61326-1
- UL 61010-1
- IEC 61000-3-3
- FCC part 15 Class A
- DNV GL certified

PM5350 series

PB117511

Front display of PowerLogic™ PM5350P front display

PB117512

Rear view of PowerLogic™ PM5350P

Commercial reference number	Description
METSEPM5350	RS-485 Modbus, THD, 4DI, 2Relay
METSEPM5350IB	RS-485, 4DI/2Relay, Multi-level alarm, UL480V, 4DI/2Relay
METSEPM5350PB	RS-485, 4DI/2Relay, Multi-level alarm, UL300V, 4DI/2Relay
METSEPM5350P	RS-485 Modbus, THD, 31st Individual harmonics, Multi-tariff, 4DI/2Relay

The PowerLogic™ PM5350 series power meters offer electrical installation measurement capabilities in a single 96 x 96 mm unit. Three-phases and neutral can be monitored simultaneously using a bright, anti-glare display with large characters and backlighting. Menus are intuitive and the meter supports English, Chinese, Hebrew, and Spanish languages. Its compact size and high performance make the PowerLogic™ PM5350 series suitable for many applications.

- Applications
  - Panel instrumentation.
  - Cost allocation or energy management.
  - Electrical installation remote monitoring.
  - Alarming with under/over, digital status, control power interruption, meter reset, self diagnostic issue.
  - Circuit Breaker monitoring and control with relay outputs and whetted digital inputs.
- Main characteristics
  - Easy to install
    - Mounts using two clips, no tools required. Ultra compact meter with 44 mm depth connectable up to 480 V L-L without voltage transformers for installations compliant with category III, as per IEC 61010-1. See specification table for UL voltage limits.
  - Easy to operate
    - Intuitive navigation with self-guided, language selectable menus, six lines, four concurrent values. Two LEDs help confirm normal operation.
  - Easy circuit breaker monitoring and control
    - Two relay outputs (high performance) to command most circuit breaker coils directly. Monitored switches can be wired directly without external power supply.
  - System status at a glance
    - Bright, anti-glare, backlit display plus two LEDs; orange for energy pulse or alarm and green for heartbeat/communications indication.
  - IEC 62053-22 class 0.5S accuracy for active energy
    - Accurate energy measurement for cost allocation.
  - Power Quality analysis
    - The PM5350P offers THD and TDD measurements as standard. Total Demand Distortion is based on a point of common coupling (PCC), which is a common point that each user receives power from the power source. The TDD compares the contribution of harmonics versus the maximum demand load. In addition, it has individual harmonics (odd) measurement up to 31st harmonics. These types of power quality parameters help to identify the source of harmonics that can harm transformers, capacitors, generators, motors and electronic equipment.
- Load management
  - Peak demands with Timestamping are provided. Predicted demand values can be used in basic load shedding applications. Alarming with timestamping
  - Over 30 alarm conditions, such as under/over conditions, digital input changes, and phase unbalance inform you of events. A time-stamped log maintains a record of the last 40 alarm events.
  - Load timer setpoint adjustable to monitor and advise maintenance requirements.
  - Performance Standard Meets IEC 61557-12 PMD/Sx/K70/0.5.

PM5350 series

Feature guide		PM5350P	PM5350	PM5350IB	PM5350PB
General					
Use on LV and MV systems		■			
Basic metering with THD and min/max readings		■			
Instantaneous rms values					
Current	Total, Phases and neutral	■			
Voltage	Total, Ph-Ph and Ph-N	■			
Frequency		■			
Real, reactive, and apparent power	Total and per phase	Signed			
True Power Factor	Total and per phase	Signed, Four Quadrant			
Displacement PF	Total and per phase	Signed, Four Quadrant			
Unbalanced I, VL-N, VL-L		■			
Accumulated Active, Reactive and Apparent Energy Stored in non-volatile memory		Received/Delivered; Net and absolute;			
Demand values					
Current average	Present, Last, Predicted, Peak, & Peak Date Time	■			
Active power	Present, Last, Predicted, Peak, & Peak Date Time	■			
Reactive power	Present, Last, Predicted, Peak, & Peak Date Time	■			
Apparent power	Present, Last, Predicted, Peak, & Peak Date Time	■			
Multi-tariff		16 tariffs			
Peak demand with timestamping D/T for current & powers		■			
Demand calculation	Sliding, fixed and rolling block, thermal	■			
Synchronization of the measurement window		■			
Other measurements					
I/O timer		■			
Operating timer		■			
Active load timer		■			
Alarm counters		■			
Power quality measurements					
THD, thd (Total Harmonic Distortion)		I, V L-N, V L-L			
TDD, thd (Total Demand Distortion)		■			
Harmonics Individual (Odd)		31st			
Data recording					
Min/max of instantaneous values, plus phase identification		■			
Alarms with 1s timestamping		Standard 29; Unary 4; Digital 4			
Alarms stored in non-volatile memory		40 events			
Inputs/Outputs					
Digital inputs		4 (DI1, DI2, DI3, DI4)			
Digital outputs		2 relay outputs (DO1, DO2)			
Display					
White backlit LCD display, 6 lines, 4 concurrent values		■			
IEC or IEEE visualization mode		■			
Communication					
Modbus RTU, Modbus ASCII, Jbus Protocol		■			
Firmware update via RS-485 serial port (DLF3000 via the Schneider Electric website: www.se.com)		■			

PM5350 series

Electrical characteristics			PM5350	PM5350P	PM5350PB/IB
Type of measurement		True rms measurement in 1P, 2P, 3P network, supports 13 wiring schemes. 32 samples per cycle, zero blind	■	31st	■
Measurement accuracy	Current, Phase(1)	±0.30 %	■	0.2% (Avg A)	■
	Voltage, L-N (1)	±0.30 %	■	0.2% (Avg A)	■
	Power Factor (1)	±0.005	■		
	Power, Phase(2)	IEC 61557-12 Class 0.5; For 5 A nominal CT	■		
	Frequency (1)	±0.05 %	■		
	Real Energy(3)	IEC 62053-22 Class 0.5S IEC 61557-12 Class 0.5	■		
	Reactive Energy(4)	IEC 62053-23 Class 2 IEC 61557-12 Class 2	■		
Data update rate		1 second nominal (50/60 cycles)	■		
Input-voltage	VT primary	1.0 MV AC max, starting voltage depends on VT ratio	■		
	U nom	277 V L-N	■		
	Measured voltage with overrange & Crest Factor	IEC: 20 to 480 V AC L-L; 20 to 277 V AC L-N, CAT III IEC: 20 to 690 V AC L-L; 20 to 400 V AC L-N, CAT II UL: 20 to 300 V AC L-L, CAT III	■		■ and UL: 20 to 480 V AC L-L
	Permanent overload	700 V AC L-L, 404 V AC L-N	■		
	Impedance	10 MΩ	■		
	Burden	0.2 VA at 240 V AC L-N	■		
	Frequency range	45 to 70 Hz	■	45 to 65 Hz	■
Input-current	CT ratings Secondary	1 A, 5 A nominal	■		
	Measured voltage with overrange & crest factor	5 mA to 9 A	■		
	Withstand	Continuous 20 A,10 sec/hr 50 A,1 sec/hr 500 A	■		
	Impedance	< 0.3 mΩ	■		
	Frequency range	45 to 70 Hz	■		
	Burden	< 0.024 VA at 9 A	■		
AC control power	Operating range	85 - 265 V AC	■		
	Burden	At 120 V AC, 4.1 VA/ 1.5 W typical At 230 V AC, 6.3 VA/ 2.0 W typical At 265 V AC, 9.6 VA/ 3.5 W typical	6.7 VA / 2.7 W 8.6 VA / 2.9 W 11.9 VA / 3.5 W	7 VA / 4 W 9 VA / 5 W 11.9 VA / 5 W	6.7 VA / 2.7 W 8.6 VA / 2.9 W 11.9 VA / 3.5 W
	Frequency	45 to 65 Hz	■		
	Ride-through time	Typical at 120 V AC and with maximum burden Typical at 230 V AC and with maximum burden	100 mS 400 mS	40 mS 250 mS	100 mS 400 mS
DC control power	Operating range	100 to 300 V DC	■		
	Burden	Typical/ Maximum at 125 V DC Typical/ Maximum at 250 V DC Typical Maximum at 300 V DC	1.4 W / 2.6 W 1.8 W / 2.7 W 3.8 W max	4 W max 5 W max 5 W max	1.4 W / 2.6 W 1.8 W / 2.7 W 3.8 W max
	Ride-through time	Typical at 125 V DC and with maximum burden	50 mS	30 mS	50 mS
Real time clock	Battery backup	30 seconds ride-through	■	3 years backup without control power	■
Digital output	Number/Type	2 - Mechanical Relays	■		
	Output frequency	0.5 Hz maximum (1 second ON / 1 second OFF - minimum times)	■		
	Switching Current	30 V DC, 5 A 250 V AC, 8 A Cos φ = 1 250 V AC, 6 A Cos φ = 0.4	■		
	Isolation	2.5 kVrms	■		
Status Digital Inputs	Voltage ratings	ON 18.5 to 36 V DC, OFF 0 to 4 V DC	■		
	Input Resistance	110 k Ω	■		
	Maximum Frequency	2 Hz (T ON min = T OFF min = 250 ms)	■		
	Response Time	10 ms	■		
	Isolation	2.5 kVrms	■		
Whetting output	Nominal voltage	24 V DC	■		
	Allowable load	4 mA	■		
	Isolation	2.5 kVrms	■		

(1) Measurements taken from 45 Hz to 65 Hz, 0.5 A to 9 A, 57 V to 347 V & 0.5 ind to 0.5 cap power factor with a sinusoidal wave.
(2) Active power: ±0.5 % from 0.25 A to 9.0 A at Cos φ = 1, ±0.6 % from 0.50 A to 9.0 A at Cos φ = 0.5 (ind or cap)
(3) Real/active Energy: ±0.5 % from 0.25 A to 9.0 A at Cos φ = 1, ±0.6 % from 0.50 A to 9.0 A at Cos φ = 0.5 (ind or cap) IEC 61557-12 Class 0.5
(4) Reactive energy: ±2.0 % from 0.25 A to 9.0 A at Sin φ = 1±2.5 % from 0

PM5350 / PM5350P series

Rear of meter - open

PE86279

Rear view retainers - installation

PE86274

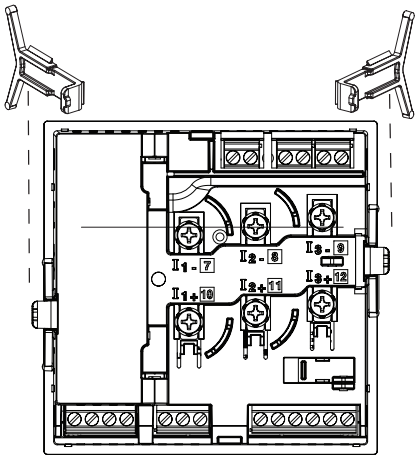

PB113626

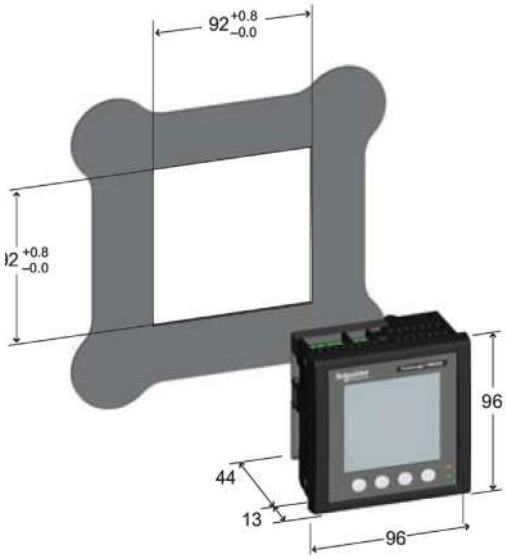

Rear view retainers - users

PE86275

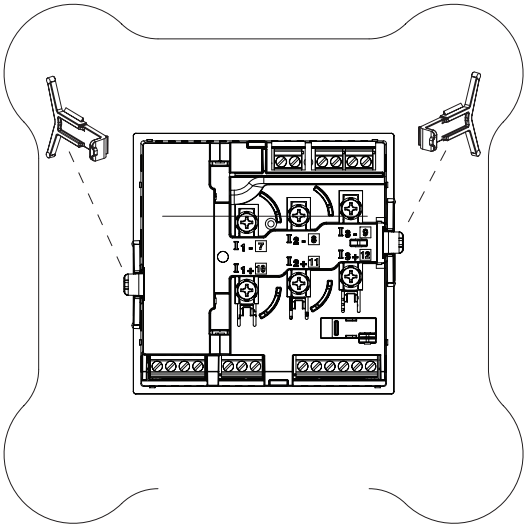

For detailed installation instructions see the product's Installation Guide.

PB113626

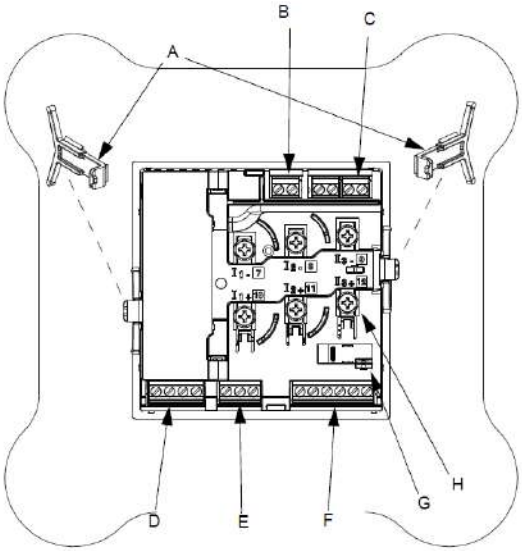

PM5350 / PM5350P meter parts

A Retainer clips.
B Control power supply connector.
C Voltage inputs.
D Digital outputs.
E RS-485 port (COM1).
F Digital input.
G Optical revenue switch.
H Current inputs.

For detailed installation instructions see the product's Installation Guide.

PM5350IB/PB series

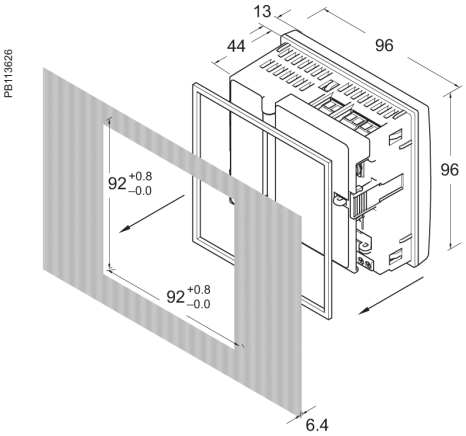

Dimensions PM5350IB

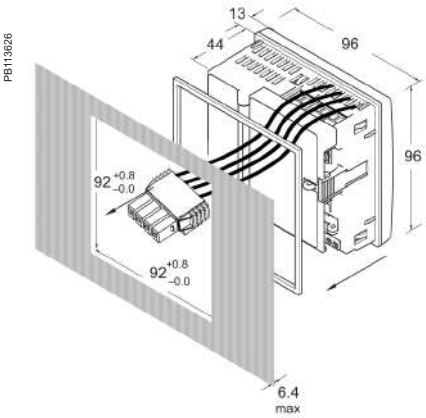

Dimensions PM5350PB

Parts of PM5350IB and PM5350PB (rear panel door removed)

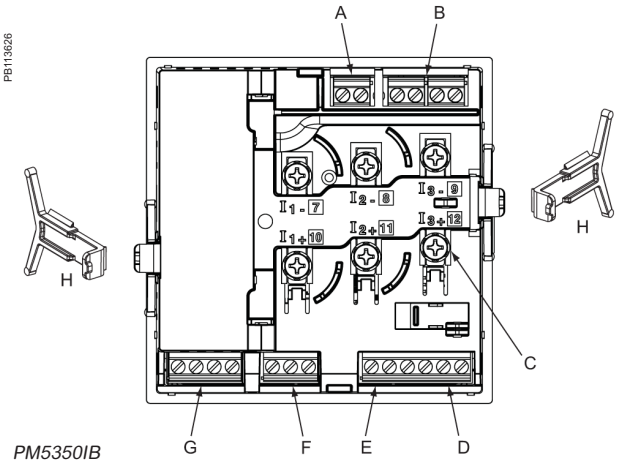

PM5350IB

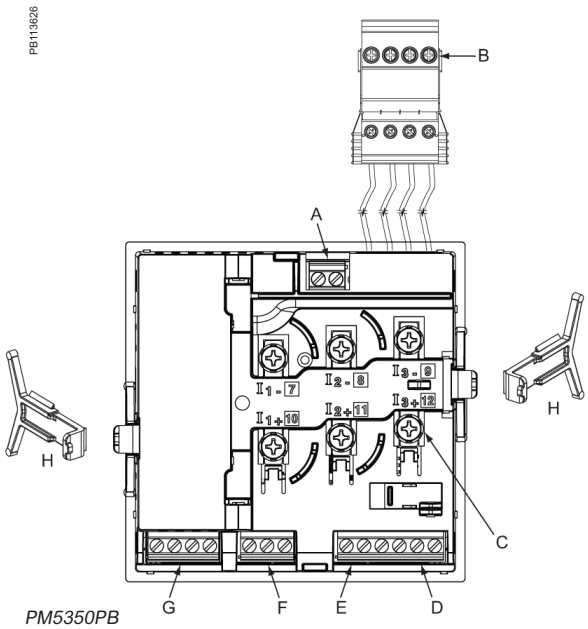

PM5350PB

A Control power
B Voltage inputs
C Current inputs
D Digital inputs
E Whetting voltage source (for digital inputs)
F RS-485 communications
G Digital outputs
H Retainer clips

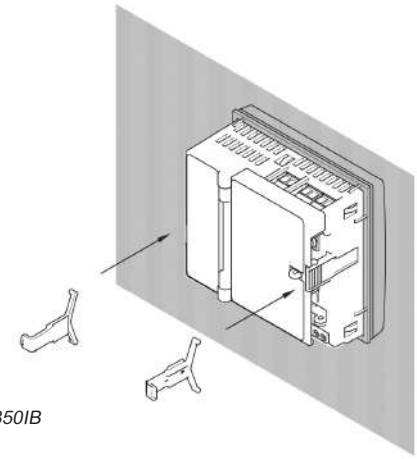

PM5350IB

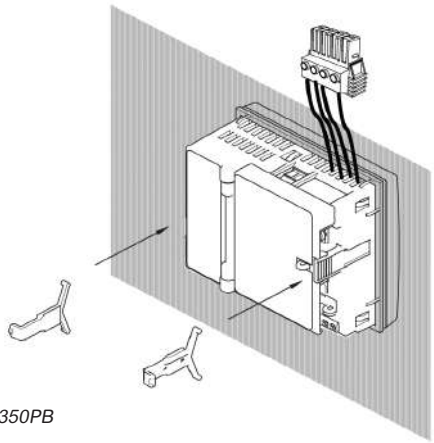

PM5350PB

For detailed installation instructions see the product's Installation Guide.

Advanced Metering

Advanced high performance meters are designed for mains or critical loads on MV/LV networks. They provide analysis of efficiency, losses and capacity, bill verification, power quality compliance monitoring, problem notification and diagnosis and control of loads, etc. Power quality meters are classified as advanced meters designed to monitor service entrances and critical network locations to maximize power availability and reliability by providing a comprehensive system load profile, power quality and root cause analyses.

- PowerLogic™ PM8000
- PowerLogic™ ION9000

PB113687

PB115917

PM8000

ION9000

PowerLogic™ PM8000 series

The PowerLogic™ PM8000 series meters are compact, cost-effective multifunction power meters that will help you ensure reliability and efficiency of your power-critical facility.

Reveal and understand complex power quality conditions. Measure, understand and act on insightful data gathered from your entire power system. Designed for key metering points throughout your energy infrastructure, the PowerLogic™ PM8000 series meter has the versatility to perform nearly any job you need a meter to do, wherever you need it!

Applications

Ideal for low to high voltage applications in industrial facilities, data centers, infrastructure and other critical power environments.

PB113687

METSEPM8240

PM8000 series

The solution for

Markets that can benefit from a solution that includes PowerLogic™ PM8000 series meters:

- Industry
- Data centers
- Infrastructure
- Healthcare
- Buildings

Benefits

- Makes understanding power quality simple to help operations personnel avoid downtime and helps ensure increased productivity and equipment life.
- Makes energy and power quality immediately relevant and actionable to support your operational and sustainability goals.

Competitive advantages

- Modular, flexible patented ION technology architecture enables a simple building block approach.
- Disturbance Direction Detection, modularity and compliance with latest power quality standards.
- Color screen.
- Multiple communication options.
- Excellent accuracy.

Power management solutions

Schneider Electric provides innovative power management solutions to increase your energy efficiency and cost savings, maximize electrical network reliability and availability, and optimise electrical asset performance.

Conformity of standards

- EN 50160
- EN 50470
- IEC 61000-4-30
- IEC 61010-1
- IEC 61326-1
- IEC 61557-12
- IEC 62052-11
- IEC 62053-11
- IEC 62053-22
- IEC 62053-23
- IEC 62053-24
- IEC 62586-2
- IEEE 519
- UL 61010-1

PB113696

PowerLogic™ PM8000 DIN rail meter- underside

PB113668

PowerLogic™ PM8000 series meter - rear view

PB113692

PowerLogic™ PM8000 DIN rail mounted meter

PM8000 series

PB113641

PowerLogic™ PM8000 series meter

PB119094

PowerLogic™ PM8000 series waveform web page sample

PB119093

PowerLogic™ PM8000 series CBEMA web page sample

PB119095

PowerLogic™ PM8000 series PQ harmonics web page sample

Feature selection

Commercial reference number	PM8000 meters
PM81XX	Essential Feature Set
PM82XX	Standard Feature Set
PM83XX	Advanced Feature Set

Main characteristics

- Precision metering:
  - IEC 61557-12 PMD/SD/K70/0.2 and PMD/SS/K70/0.2 3000m (performance measuring and monitoring functions).
  - Class 0.2S accuracy IEC 62053-22, ANSI C12.20 Class 0.2 (active energy).
  - Industry leading Class 0.5S accuracy for reactive energy (IEC 62053-24).
  - Cycle-by-cycle RMS measurements updated every ½ cycle.
  - Full 'multi-utility' WAGES metering support.
  - Net metering.
  - Anti-tamper protection seals and hardware metrology lock.
- PQ compliance reporting and basic PQ analysis:
  - Monitors and logs parameters in support of international PQ standards,
    - IEC 61000-4-30 Class A/S (test methods as per IEC 62586-2).
  - Generates onboard PQ compliance reports accessible via onboard web pages:
    - Basic event summary and pass/fail reports, for EN 50160 for power frequency, supply voltage indication, supply voltage dips, short and long interruptions, temporary over voltages, voltage unbalance and harmonic voltage.
    - ITIC (CBEMA) and SEMI curves, with alarm categorization to support further analyses.
    - NEMA Motor Derating curve.
    - Pass/fail report for IEEE 519 for voltage and current harmonic limits.
  - Harmonic analysis:
    - THD on voltage and current, per phase, min/max, custom alarming.
    - Individual harmonic magnitudes and angles on voltage and current, up to the 63rd harmonic.
  - High resolution waveform capture: triggered manually or by alarm, captured waveforms available directly from the meter via SFTP in a COMTRADE format.
  - Disturbance detection and capture: sag/swell on any current and voltage channel, alarm on disturbance event, waveform capture with pre-event information.
  - Patented Disturbance Direction Detection: provides indication of the captured disturbance occurring upstream or downstream of the meter; timestamped results provided in the event log, with degree of certainty of disturbance direction.
- Used with Schneider Electric's sophisticated software tools, provides detailed PQ reporting across entire network:
  - EN 50160 report.
  - IEC 61000-4-30 report.
  - IEEE 519 harmonic compliance report.
  - PQ compliance summary.
  - Display of waveforms and PQ data from all connected meters.
  - Onboard web-based waveform viewer.
  - Energy reports for consumption analysis and cost management.
  - WAGES dashboards and reports.
  - EcoStruxure™ Power Events Analysis, including alarm management, sequence of events, and root cause analysis.
- Cybersecurity:
  - Security events logging with Syslog protocol support.
  - HTTPS secure protocol.
  - Ability to enable or disable any communication port and any protocol per port.
  - Anti-tamper protection seals and hardware metrology lock.
  - User accounts with strong passwords.
- Data and event logging:
  - Onboard data and event logging.
  - 512 MB storage.

PM8000 series

PB113669

PowerLogic™ PM8000 series meter with remote display

PB113686_1

PowerLogic™ PM8000 series meter with option modules

PB113682

PowerLogic™ PM8000 series with RS-485 4-Wire module

PB113699

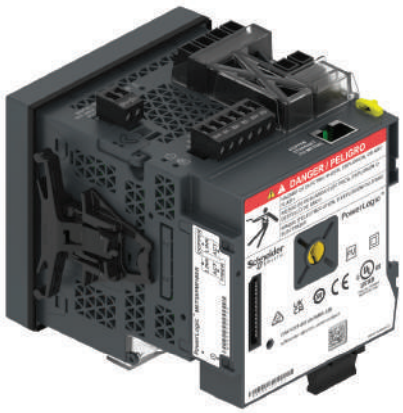

PowerLogic™ PM8000 series with Fiber-Ethernet Module

Main characteristics (contd.)

- No data gaps due to network outages or server downtime.
- Min/Max log for standard values.
- Up to 64 user definable data logs, recording up to 16 parameters on a cycle-by-cycle or other user definable interval.
- Continuous logging or 'snapshot' triggered by setpoint and stopped after defined duration.
- Trend energy, demand and other measured parameters.
- Forecasting via web pages: average, minimum and maximum for the next four hours and next four days.
- Advanced time-of-use capability.
- Security / event log: alarm conditions, metering configuration changes, power outages, firmware download, and user login/logout all timestamped to ±1 millisecond.

- Alarming and control:
  - 50+ definable alarms to log critical event data, trigger waveform recording, or perform control function.
  - Trigger on any condition, with 1/2-cycle and 1-second response time.
  - Combine alarms using Boolean logic and to create alarm levels.
  - Alarm notification via email.
  - In conjunction with Schneider Electric's EcoStruxure™ software, alarms, software alarms, and alarm frequency are categorized and trended enabling sequence of events and root cause analyses.

Usability

- Easy installation and setup:
  - Panel and DIN rail mounting options, remote display option.
  - Pluggable connectors.
  - Free setup application simplifies meter configuration.
  - Auto-discovery using DPWS (Device Profile Web Services).
  - DHCP for automatic IP address configuration.

- Front panel:
  - Easy to read color graphic display.
  - Simple, intuitive menu navigation with multi-language (8) support.

- Flexible remote communications:
  - Multiple simultaneously operating communication ports and protocols allow interfacing with other automation systems; (e.g. waveforms, alarms, billing data, etc.) can be uploaded for viewing/analysis while other systems access real-time information.
  - Supports Modbus, ION, DNP3, IEC 61850.
  - Dual port Ethernet: 10/100BASE-TX; supports IPV4 and IPV6; daisy-chaining capability removes need for additional switches.
  - Fiber-Ethernet option module: Multi-mode 100Base-FX with SC duplex connector
  - Secure web interface with HTTPS and TLS 1.2 with support for user-provided certificates.
  - Create redundant network loop using Rapid Spanning Tree Protocol (RSTP) and managed Ethernet switches.
  - Customize TCP/IP port numbers and enable/disable individual ports.
  - RS-485 2-wire connection, up to 115,200 baud, Modbus RTU, ION and DNP3 protocols.
  - 4-Wire RS-485 option module: Up to 115,200 baud, Modbus RTU, ION and DNP3 protocols.
  - Ethernet to serial gateway with Modbus Master functionality, connecting to 31 downstream serial Modbus devices. Also supports Modbus Mastering over TCP/IP (Ethernet) network.
  - Full function web server with factory and customizable pages to access real-time and PQ compliance data.

PM8000 series

PB113671_1

PowerLogic™ I/O module

PB113672

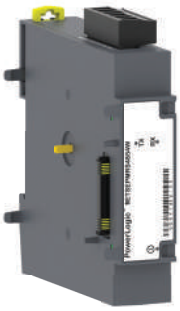

4-Wire RS-485 Option Module

PB113673

Fiber-Ethernet Option Module

PB113678

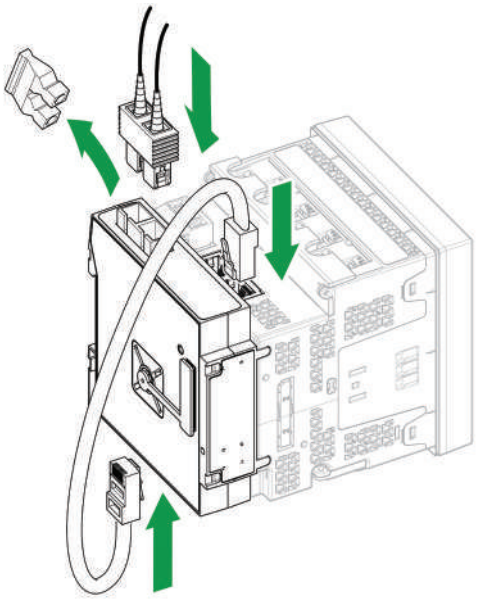

PowerLogic™ PM8000 connection with Fiber-Ethernet module

- Time synchronization via:
  - GPS clock (RS-485) or IRIG-B (digital input) to ±1 millisecond.
  - Network Time Protocol (NTP/SNTP).
  - Precision Time Protocol (PTP - IEEE 1588 / IEC 61588).
  - Time set function from Schneider Electric software server.

Adaptability

- ION™ frameworks are customizable, scalable applications with object-oriented programming that compartmentalizes functions, and increases flexibility and adaptability.
- Applications include: accessing and aggregating data from downstream Modbus devices over serial or across the network (Modbus TCP/IP), logging and/or processing data through totalization, unit conversion or other calculations, applying complex logic for alarming or control operations, and visualization via webpages.

Standard meter I/O

- 3 digital status/counter inputs.
- 1 KY (form A) energy pulse output for interfacing with other systems.

Advanced Metering Option Modules

- Expanding meter's flexibility with communication and I/O option modules
- Powered from meter base

I/O Expansion Option Modules

Option modules include:

- Digital module:
  - 6 digital status/counter inputs.
  - 2 Form C relay outputs, 250 V, 8 A.
- Analog module:
  - 4 analog inputs (4-20 mA; 0-20 mA; 0-30 V).
  - 2 analog outputs (4-20 mA; 0-20 mA; 0-10 V) for interfacing with building management sensors and systems.

Communication Option Modules

Option modules include:

- 4-Wire RS-485 Module [+1]:
  - Adds 4-wire support to the meter i.e. eliminating the cost and efforts of rewiring while replacing/retrofitting legacy 4-Wire RS-485 systems
  - Pluggable screw terminal connector
- Fiber-Ethernet Module [+2]:
  - Provides isolated data transmission through fiber optics up to 2000 m length
  - Supports multi-mode 100Base-FX type
  - SC duplex connector

[+1] Onboard 2-Wire RS-485 port is disabled with the optional module.
[+2] Connected to the meter base using Ethernet patch cable (included with the module)

Maximum of 4 optional modules in total (Fiber-Ethernet, 4-Wires RS-485, I/O modules) can be connected to the meter. Only 1 Fiber-Ethernet and 1 4-Wire RS-485 option module is supported per meter.

*Please refer to the option module **Installation Guides** for more details.*

PM8000 series

Feature guide

		PM8000 Essential	PM8000 Standard	PM8000 Advanced
General				
Use on LV, MV, and HV systems		■	■	■
Current accuracy		0.1 % reading	0.1 % reading	0.1 % reading
Voltage accuracy		0.1 % reading	0.1 % reading	0.1 % reading
Active energy accuracy		0.2 Class	0.2 Class	0.2 Class
Number of samples/cycle or sample frequency		256 (+3)	256	512
ION programability		■	■	■
Instantaneous rms values				
Current, voltage, frequency		■	■	■
Active, reactive, apparent power	Total and per phase	■	■	■
Power factor	Total and per phase	■	■	■
Current measurement range (autoranging)		0.05 - 10 A	0.05 - 10 A	0.05 - 10 A
Energy values				
Active, reactive, apparent energy		■	■	■
Settable accumulation modes		■	■	■
Demand values				
Current	Present and max.values	■	■	■
Active, reactive, apparent power	Present and max.values	■	■	■
Predicted active, reactive, apparent power		■	■	■
Synchronization of the measurement window		■	■	■
Setting of calculation mode	Block, sliding	■	■	■
Power quality measurements				
Harmonic distortion	Current and voltage	■	■	■
Individual harmonics	Via front panel and web page	31	63	63
	Via EcoStruxure™ software	-	127	127
Waveform capture		■ (+3)	■	■
Detection of voltage swells and sags		■	■	■
Fast acquisition	1/2 cycle data	■	■	■
IEC 61000-4-30 Class A/S		-	S	A
EN 50160 Interharmonic		-	-	■
IEC 61000-4-15		-	-	■
EN 50160 compliance checking		-	■	■
IEEE 519 compliance checking		-	■	■
Disturbance Direction Detection		-	■	■
Rapid Voltage Change		-	■	■
Customizable data outputs (using logic and math functions)		■	■	■
Data recording				
Min/max of instantaneous values		■	■	■
Event logs		■	■	■
Trending/forecasting		-	■	■
SER (Sequence of event recording)		■	■	■
Time stamping		■	■	■
GPS synchronization (±1 ms)		■	■	■
Data Recorder		10	50	64
Memory Channels		160	800	1024
Storage (in Mbytes)		64	512	512

(+3) Waveform capture is limited to 128 Samples/cycle recording.

PM8000 series

Feature guide (Contd.)

	PM8000 Essential	PM8000 Standard	PM8000 Advanced
Display and I/O			
Front panel display	■	■	■
Wiring self-test	■	■	■
Pulse output	1	1	1
Digital or analog inputs (max)	27 digital 16 analog	27 digital 16 analog	27 digital 16 analog
Digital or analog outputs (max, including pulse output)	1 digital 8 relay 8 analog	1 digital 8 relay 8 analog	1 digital 8 relay 8 analog
Communication			
2-Wire RS-485 port	1	1	1
Ethernet port	2	2	2
Serial port (Modbus, ION, DNP3)	■	■	■
Ethernet port (Modbus/TCP, ION TCP, DNP3 TCP, DHCP, DNS, IPv4, IPv6, IEC 61850)	■	■	■
Ethernet gateway	■	■	■
Alarm notification via email	■	■	■
HTTP/HTTPs web server with waveform viewer	■	■	■
SNMP with custom MIB and traps for alarms	■	■	■
SMTP email	■	■	■
PTP and NTP time synchronization	■	■	■
FTP file transfer	■	■	■
Option module with 4-Wire RS-485 port	■	■	■
Option module with Fiber-Ethernet port	■	■	■

Commercial references

Essential	Standard	Advanced	Description
METSEPM8140	METSEPM8240	METSEPM8340	96 x 96 panel mount meter, AC/DC power
METSEPM8110	METSEPM8210	METSEPM8310	96 x 96 panel mount meter, LV DC power
METSEPM8143	METSEPM8243	METSEPM8343	DIN rail mount meter, AC/DC power
METSEPM8113	METSEPM8213	METSEPM8313	DIN rail mount meter, LV DC power
METSEPM8144	METSEPM8244	METSEPM8344	DIN rail mount meter with remote display, AC/DC power
METSEPM8114	METSEPM8214	METSEPM8314	DIN rail mount meter with remote display, LV DC power
METSEPM81401	METSEPM82401	METSEPM83401	MID approved panel mount meter (+4)
-	METSEPM82403	-	RMICAN approved panel mount meter (+5)
METSEPM81404	METSEPM82404	METSEPM83404	RMICAN sealed panel mount meter (+5)

Accessories	Description
METSEPM89RD96	Remote display, 3 metre cable, mounting hardware for 30 mm hole (nut & centering pin), mounting hardware for DIN96 cutout (92 x 92 mm) adapter plate
METSEPM89M2600	Digital I/O module (6 digital inputs & 2 relay outputs)
METSEPM89M0024	Analog I/O module (4 analog inputs & 2 analog outputs)
METSECAB10	Display Cable, 10 m
METSEPM8HWK	Replacement hardware kit (connectors, screws, retainer clips, mounting template)
METSEPMRS4854W	4-Wire RS 485 option module
METSEPMFIBER	Fiber-Ethernet option module
METSEPM8000SK	Sealing kit

(+4) For UK + EU only.
(+5) For Canada only.

PM8000 series

Technical Specifications

Electrical characteristics		
Type of measurement		True rms to 512 samples per cycle
Measurement accuracy	Current & voltage	Class 0.2 as per IEC 61557-12
	Active Power	Class 0.2 as per IEC 61557-12
	Power factor	Class 0.5 as per IEC 61557-12
	Frequency	Class 0.02 as per IEC 61557-12
	Active energy	Class 0.2S IEC 62053-22 Class 0.2 IEC 61557-12, ANSI C12.20 Class 0.2
	Reactive Energy	Class 0.5S IEC 62053-24*
	MID Directive	EN 50470-1, EN 50470-1, AnnexB & AnnexD (optional model)
Display refresh rate		1/2 cycle or 1 second
Input-voltage characteristics	Specified accuracy voltage	57 - 400 V L-N / 100 - 690 V L-L
	Impedance	5 MΩ per phase
	Specified accuracy frequency - Frequency	42 to 69 Hz (50/60 Hz nominal)
	Limit range of operation - frequency	20 to 450 Hz
Input-current characteristics	Rated nominal current	1 A (0.2S), 5 A (0.2S) , 10 A (0.2 ANSI)
	Specified accuracy current range	Starting Current: 5 mA Accurate Range: 50 mA - 10 A
	Permissible overload	200 A rms for 0.5 s, non-recurring
	Impedance	0.0003 Ω per phase
	Burden	0.01 VA max at 5 A
Power supply AC/DC	AC	90-415 V AC ±10 % (50/60 Hz ±10 %) 90-120 V AC +/- 10% (400 Hz)
	DC	110-415 V DC ±15 % (20-60 V DC ±10 % for PM8210
	Ride-through time	100 ms (6 cycles at 60 Hz) min., any condition 200 ms (12 cycles at 60 Hz) typ., 120 V AC 500 ms (30 cycles at 60 Hz) typ., 415 V AC
	Burden	Typical: 7.7 W / 16 VA at 230 V (50/60 Hz) Fully optioned: max. 18 W / 40 VA at 415 V (50/60 Hz)
Power supply LV DC	DC	20 to 60 V DC ±10 %
	Burden	Fully optioned: max. 18 W at 18 to 60 V DC
Input/outputs	Meter Base Only	3 digital inputs (30 V AC/60 V DC) 1 form A (KY) solid state digital output (30 V AC/60 V DC, 75 mA)
	Optional	Digital - 6 digital inputs (30 V AC / 60 V DC) wetted + 2 form C relay outputs (250 V AC, 8 A)
		Analog - 4 analog inputs (4-20 mA, 0-30 V DC) + 2 analog outputs (4-20 mA, 0-10 V DC)
Mechanical characteristics		
Weight		Integrated Display Model 0.581 kg DIN rail mounted Model 0.528 kg IO modules 0.140 kg Remote display 0.300 kg
IP degree of protection		IP 54, UL type 12: Panel mount and Remote display, front IP 30: Panel mount rear, DIN rail mount, I/O modules
Excellent quality		ISO 9001 and ISO 14000 certified manufacturing
Dimensions	Panel mount model	96 x 96 x 77.5 mm
	DIN model	90.5 x 90.5 x 90.8 mm
	Remote display	96 x 96 x 27 mm
	IO modules	90.5 x 90.5 x 22 mm
Environmental conditions		
Operating temperature		-25 °C to 70 °C
Remote Display Unit		-25 °C to 60 °C
Storage temperature		-40 °C to 85 °C
Humidity rating		5 % to 95 % non-condensing
Installation category		III
Operating altitude (maximum)		3000 m above sea-level
Electromagnetic compatibility		
EMC standards		IEC 62052-11 and IEC 61326-1
Immunity to electrostatic discharge		IEC 61000-4-2
Immunity to radiated fields		IEC 61000-4-3
Immunity to fast transients		IEC 61000-4-4
Immunity to surges		IEC 61000-4-5
Immunity to conducted disturbances		IEC 61000-4-6
Immunity to power frequency magnetic fields		IEC 61000-4-8
Immunity to conducted disturbances, 2-150kHz		CLC/TR 50579
Immunity to voltage dips & interruptions		IEC 61000-4-11
Immunity to ring waves		IEC 61000-4-12
Conducted and radiated emissions		EN 55022, EN 55011, FCC part 15 Class B, EN55011, EN55022 Class B, ICES-003 Class B
Surge withstand Capability (SWC)		IEEE / ANSI C37.90.1

PM8000 series

Technical Specifications(Contd.)

Safety	
Safety Construction	IEC/EN 61010-1 ed.3, CAT III, 400 V L-N / 690 V L-L UL 61010-1 ed.3 and CSA-C22.2 No. 61010-1 ed.3, CAT III, 347 V L-N / 600 V L-L IEC/EN 62052-11, protective class II
Communication	
Ethernet to serial line gateway	Communicates directly with up to 31 unit load devices
Web server	Customisable pages, new page creation capabilities, HTML/XML compatible
Serial port RS-485	Baud rates of 2400 to 115200, pluggable screw terminal connector
Ethernet port(s)	2x 10/100BASE-TX, RJ45 connector (UTP)
Protocol	Modbus, ION, DNP3, IEC 61850, HTTPS, FTP, SNMP, SMTP, DPWS, RSTP, NTP, PTP, NTP/SNTP, GPS, IPv4 /IPv6, DHCP, Syslog protocols
Communication Option Modules	
Optional 4-Wire RS-485 serial port	Baud rates of 2400 to 115200, pluggable screw terminal connector
Optional Fiber-Ethernet port	Ethernet patch cable from base meter, multi-mode 100Base-FX, SC duplex connector
Firmware characteristics	
High-speed data recording	Down to 1/2 cycle interval burst recording, stores detailed characteristics of disturbances or outages. Trigger recording by a user-defined setpoint, or from external equipment
Harmonic distortion	Up to 63rd harmonic (127th via Schneider Electric software) for all voltage and current inputs
Sag/swell detection	Analyse severity/potential impact of sags and swells: magnitude and duration data suitable for plotting on voltage tolerance curves per phase triggers for waveform recording, control
Disturbance direction detection	Determine the location of a disturbance more quickly and accurately by determining the direction of the disturbance relative to the meter. Analysis results are captured in the event log, along with a timestamp and confidence level indicating level of certainty
Instantaneous	High accuracy of standard speed (1s) and high-speed (1/2 cycle) measurements, including true rms per phase and total for: voltage, current, active power (kW),reactive power (kvar), apparent power (kVA), power factor, frequency, voltage and current unbalance, phase reversal
Load profiling	Channel assignments (Up to 1024 Channels via 64 data recorders) configurable for any measurable parameter, including historical trend recording of energy, demand, voltage, current, power quality, or any measured parameter. Trigger recorders based on time interval, calendar schedule, alarm/event condition, or manually
Trend curves	Historical trends and future forecasts to better manage demand, circuit loading, and other parameters. Provides average, min, max and standard deviation every hour for last 24 hours, every day for last month, every week for last 8 weeks and every month for last 12 months
Waveform captures	Simultaneous capture of all voltage and current channels, sub-cycle disturbance capture, ability to record from 320 cycles at 512 sample per cycle to over 2880 cycles at 16 points per cycle with user selectable sampling speed as well as pre- and post-trigger length
Alarms	Threshold alarms: adjustable pickup and dropout setpoints and time delays, numerous activation levels possible for a given type of alarm, user-defined or automatic alarm threshold settings, user-defined priority levels (optional automatic alarm setting)
Advanced Time of Use (TOU)	6 seasons; 3 different day types: weekend, weekday, and holiday; up to 8 tariffs per day type
Advanced security	Up to 50 users with unique access rights. Perform resets, time sync, or meter configurations based on user privileges
Storage	512 MB
Firmware update	Update via the communication ports
Display characteristics	
Integrated or Remote display	320 x 240 (1/4 VGA) Color LCD, configurable screens, 5 buttons and 2 LED indicators (alarm and meter status)
Languages	English, French, Spanish, Russian, Portugese, German, Italian, Chinese
Notations	IEC, IEEE
The HMI menu includes	
Alarms	Active alarms, historic alarms (50+ alarms)
Basic Reading	Voltage, current, frequency, power summary
Power	Power summary, demand, power factor
Energy	Energy total, delivered, received
Events	Timestamped verbose event log
Power Quality	EN 50160, IEEE 519, harmonics, phasor diagrams
Inputs/Outputs	Digital inputs, digital outputs, analog inputs, analog outputs
Nameplate	Model, serial and FW version
Custom Screens	Build your own metrics
Setup Menu	Meter setup, communications setup, display setup, date/time/clock setup, alarm setup, language setup, time of use setup, resets, password setup

PM8000 series

PM8000 panel mount meter dimensions

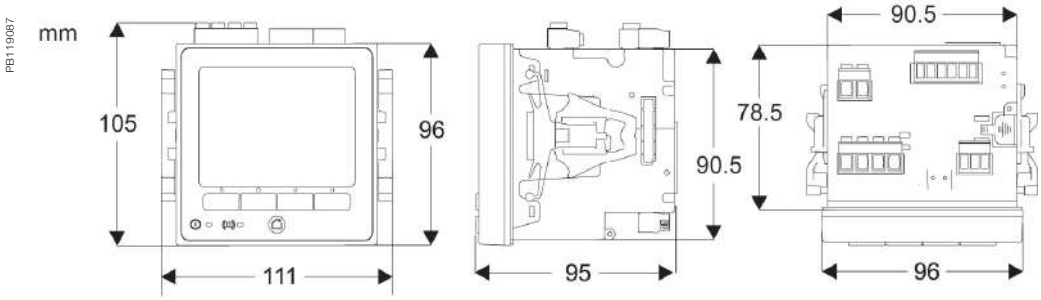

PM8000 DIN rail mount meter dimensions

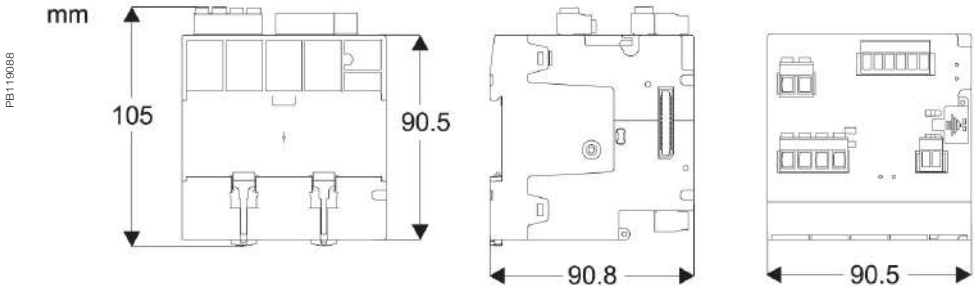

PM8000 remote display dimensions

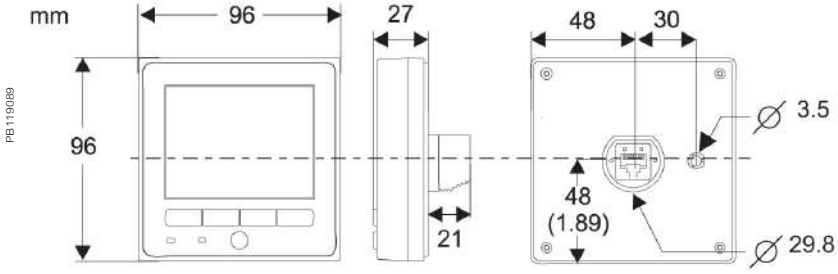

PM8000 with communication option modules

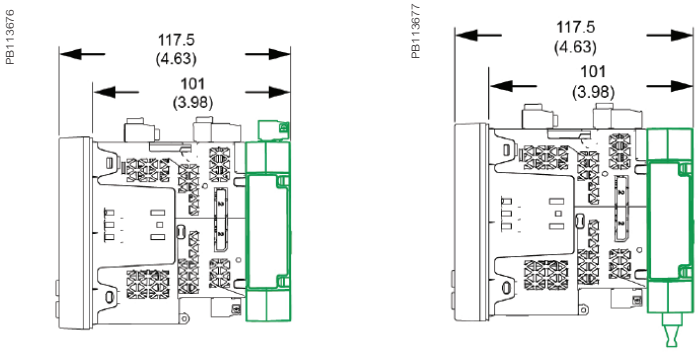

PM8000 with I/O modules dimensions

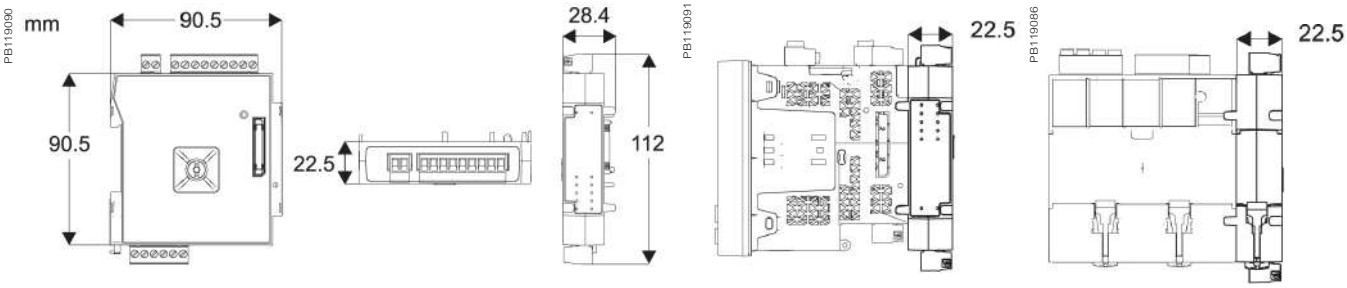

*Please see the appropriate **Installation Guide** for accurate and complete information on the installation of this product.*

PM8000 series

PM8000 series parts

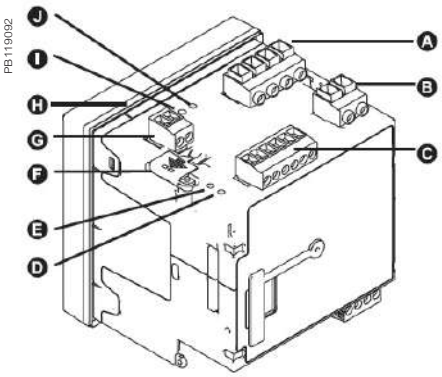

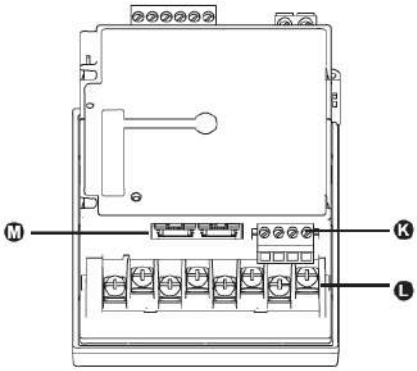

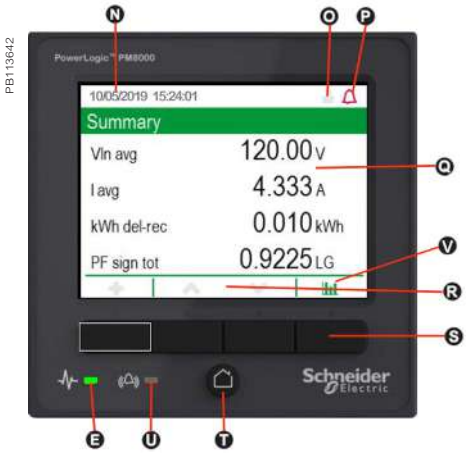

- A Voltage inputs
- B Control power
- C Digital inputs
- D Revenue lock LED (green)
- E Status LED (green/red)
- F Revenue lock switch
- G Digital output
- H Sealing gasket
- I Infrared energy pulsing LED
- J Energy pulsing LED
- K RS-485
- L Current inputs
- M Ethernet (2)
- N Date/time
- O Revenue lock icon
- P Alarm icon
- Q Display
- R Navigation icons
  - Up
  - Down
  - Select
  - Cancel
  - Edit
  - More
- S Navigation buttons
- T Home button
- U Alarm LED (red)
- V Bar graph

PowerLogic™ ION9000 series

The PowerLogic™ ION9000 is your 24/7 power quality expert, providing information, not just data.

With a comprehensive, industry-leading Power Quality Instrument (PQI) performance designation according to IEC 62586-1/-2, the PowerLogic™ ION9000 is third-party certified ANSI C12.20 Class 0.1 and IEC 62053-22 Class 0.1S accurate, the most accurate power meter available today. Lab-verified power quality and safety ensure reliable, precision performance that is perfect for supply- or demand-side applications. Its patented Disturbance Direction Detection also helps you pinpoint the source of power quality issues faster. Capable of sampling at 10 MHz, the ION9000T captures extremely fast voltage events that are missed by most other power meters, enabling advanced diagnostics and high-resolution event associations for fast, conclusive diagnosis and resolution to transient voltages.

Highly customizable and modular, the ION9000's field programmability can adapt to satisfy any solution, protecting your investment now and in the future. All designed to align with your comprehensive grid cybersecurity policies and backed by Schneider Electric's global services and support.

Applications

Ideal for critical power and large energy users who cannot afford to be shut down, the ION9000T has High-Speed Transient Capture (HSTC) to detect and record transient events that exceed the voltage withstand of sensitive equipment.

PB115917

METSEION92040

ION9000 series

The market solution for

Markets that benefit from a solution that includes PowerLogic™ ION9000 series meters:

- Data centers
- Healthcare facilities
- Semiconductor
- Pharmaceutical & chemical
- Energy industries
- Mining, Minerals, & Metals
- Renewable energy interconnects
- Medium voltage distribution & energy automation

Benefits

- Makes understanding power quality simple which helps operations personnel avoid downtime and increase productivity and equipment life
- Makes energy and power quality data immediately actionable and relevant to operational and sustainability goals

Competitive advantages

- Modular, flexible, patented ION™ programmable technology
- Utility grade energy accuracy
- Patented Disturbance Direction Detection
- Third-party, lab-verified compliance to the latest PQ standards
- Onboard pass/fail PQ characterization and assessment according to EN50160 and IEEE519
- Cybersecurity event logging, Syslog protocol, HTTPS, SFTP, and full control of each communication port
- High-speed impulsive and oscillatory transient detection

Power management solutions

Schneider Electric provides innovative power management solutions to increase your energy efficiency and cost savings. Maximize electrical network reliability and availability, and optimize electrical asset performance.

Conformity of standards

- ANSI C12.20
- ANSI C37.90.1
- IEC 61000-4-7
- IEC 61000-4-15
- IEC 61000-4-30
- IEC 61010-1
- IEC 61326-1
- IEC 61557-12
- IEC 61850
- IEC 62052-11
- IEC 62052-31
- IEC 62053-22
- IEC 62053-23
- IEC 62053-24
- IEC 62586
- UL 61010-1

PB115918

PowerLogic™ ION9000 front view

PB115916

PowerLogic™ ION9000 with panel mounting adapter

ION9000 series

PB115917

PowerLogic™ ION9000 series meter with RD192 display

PB115914

PowerLogic™ ION9000 RD192 remote display

PB115915

PowerLogic™ ION9000 Harmonics display

Main characteristics

- PQ compliance reporting and basic PQ analysis:
  - Recognized as a Power Quality Instrument Class A to IEC62586-1 and IE62586-2
  - Monitors and logs parameters according to IEC 61000-4-30 Class A international PQ standards (test methods as per IEC 62586-2).
  - High resolution waveform capture: triggered manually or by event. Captured waveforms available directly from the meter via SFTP in a COMTRADE format, and viewable in the meter's web interface.
  - Generates onboard PQ compliance reports accessible via onboard web pages:
    - Pass/fail report for IEEE 519 for voltage and current harmonic limits.
    - ITIC (CBEMA) and SEMI curves, with alarm categorization to support further analyses.
    - NEMA Motor Derating curve.
  - Harmonic analysis:
    - THD and TDD per phase, min/max, custom alarming.
    - Individual harmonic magnitudes and angles on voltage and current, up to the 63rd harmonic.
  - Disturbance detection and capture: sag/swell on any current and voltage channel, alarm on disturbance event, and waveform capture.
  - Patented Disturbance Direction Detection: provides indication of the captured disturbance occurring upstream or downstream of the meter; timestamped results provided in the event log, with degree of certainty of disturbance direction.
- Transient detection and capture: events 20 microseconds or longer in duration on any voltage channel with alarm, event log, and waveform capture.
- PowerLogic™ ION9000T also provides High-Speed Transient Capture (HSTC) of voltage events 100 nanoseconds or longer in duration and up to 10,000 V in magnitude with high-speed and disturbance waveform captures, as well as per-event statistics on each transient.

- Metering precision:
  - IEC 61557-12 PMD/SD/K70/0.2 and PMD/SS/K70/0.2 3000m (Performance Measuring and Monitoring devices (PMD)).
  - Industry leading Class 0.1S accuracy IEC 62052-11 ed.2, ANSI C12.20 Class 0.1 (active energy).
  - Class 0.5S accuracy for reactive energy (IEC 62053-24).
  - Cycle-by-cycle RMS measurements updated every ½ cycle.
  - Full 'multi-utility' WAGES metering support.
  - Net metering.
  - Anti-tamper protection seals and hardware metrology lock.

- Cybersecurity:
  - Security events logging with Syslog protocol support.
  - HTTPS and SFTP secure protocols.
  - Ability to enable or disable any communication port and any protocol per port.
  - Anti-tamper protection seals and hardware metrology lock.
  - User accounts with strong passwords.

- Used with Schneider Electric's advanced software tools, provides detailed PQ reporting across entire network:
  - EN 50160 compliance report.
  - IEEE 519 harmonic compliance report.
  - IEC 61000-4-30 report.
  - Power quality compliance summary.
  - Energy reports for consumption analysis and cost management.
  - WAGES dashboards and reports.
  - Display of waveforms and PQ data from all connected meters.
  - Onboard web-based waveform viewer.
  - EcoStruxure™ Power Events Analysis, including alarm management, sequence of events, and root cause analysis.

ION9000 series

PB115919

PowerLogic™ ION9000 front with two option modules

PB115920

PowerLogic™ ION9000 bottom with two option modules

PB113674

PowerLogic™ ION9000 iso with two communication option modules

PB113675

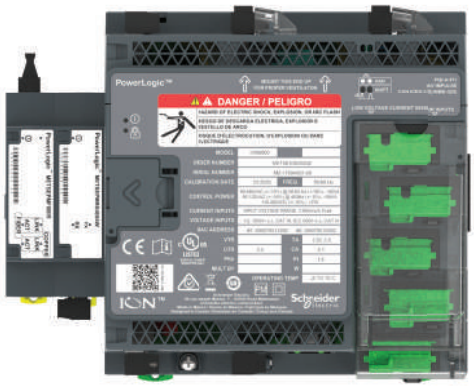

PowerLogic™ ION9000 with two communication option modules

- Data and event logging:
  - Onboard data and event logging.
  - 2 GB of standard non-volatile memory.
  - No data gaps due to network outages or server downtime.
  - Min/max log for standard values.
  - 100 user-definable data logs, recording up to 16 parameters at a 1/2 cycle or other user definable interval.
  - Continuous logging or snapshot, triggered by setpoint and stopped after defined duration.
  - Trend energy, demand and other measured parameters.
  - Forecasting via web pages: average, minimum and maximum for the next four hours and next four days.
  - Advanced time-of-use capability.
  - Security/event log: alarm conditions, metering configuration changes, power outages, firmware download, and user login/logout with timestamp.
- Alarming and control:
  - 50+ definable alarms to log critical event data, trigger waveform recording, or perform control function.
  - Trigger on any condition, with 1/2-cycle and 1-second response time.
  - Combine alarms using Boolean logic enabling customization of alarms.
  - Alarm notification via email.
  - In conjunction with Schneider Electric's EcoStruxure™ software, alarms, software alarms, and alarm frequency are categorized and trended enabling sequence of events and root cause analyses.

Usability

- Auto-discovery using DPWS (Device Profile Web Services).
- DHCP for automatic IP address configuration.
- Full function web server enables simple web commissioning.
- Free setup wizard simplifies meter configuration.
- Front panel:
  - Easy to read color graphic display.
  - Simple and intuitive menu navigation with multiple language interface and support.
- DIN rail mounting options.
- Remote display option.
- Pluggable connectors.
- Low Voltage Current Sensors Input option.
- Flexible remote communications:
  - Multiple simultaneously operating communication ports and protocols allow interfacing with other automation systems, e.g. waveforms, alarms, billing data, etc. Data can be uploaded for viewing/analysis while other systems access real-time information.
  - Supports: Modbus, ION, DNP3, DLMS/COSEM, SNMP, and IEC 61850.
  - Dual port Ethernet: 2x 10/100BASE-TX; supports IPV4 and IPV6; daisy-chaining capability removes need for additional switches.
  - Fiber-Ethernet option module: Multi-mode 100Base-FX with SC duplex connector
  - Create redundant network loop using Rapid Spanning Tree Protocol (RSTP) and managed Ethernet switches.
  - Secure web interface with HTTPS and TLS 1.2 with support for user-provided certificates.
  - Customize TCP/IP port numbers and enable/disable individual ports.
  - RS-485 2-wire connection, up to 115,200 baud, Modbus RTU, ION and DNP3 protocols.
  - 4-Wire RS-485 option module: up to 115,200 baud, Modbus RTU, ION and DNP3 protocols
  - Ethernet to serial gateway with Modbus Master functionality, connecting to 31 unit loads of downstream serial Modbus devices. Also supports Modbus Mastering over TCP/IP (Ethernet) network.

ION9000 series

PB113671_1

PowerLogic™ I/O module

PB113672

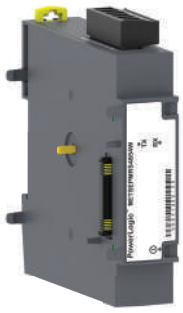

4-Wire RS-485 Option Module

PB113673

Fiber-Ethernet Option Module

PB113681

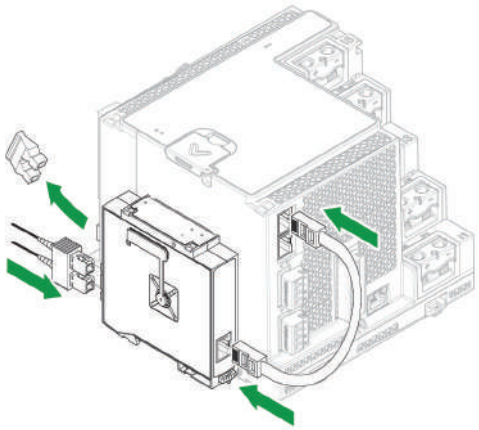

PowerLogic™ ION9000 connected with Fiber-Ethernet

- Full function web server with factory and customizable pages to access real-time and PQ compliance data.

- Time synchronization via:
  - Precision network time protocol (PTP) based on IEEE 1588 / IEC 61588.
  - GPS clock (RS-485) or IRIG-B (digital input) to ±1 millisecond.
  - Network Time Protocol (NTP/SNTP).
  - Automatic time synchronization available through Schneider Electric software server.

Adaptability

- ION™ frameworks are customizable, scalable applications with object-oriented programming that compartmentalizes functions, and increases flexibility and adaptability.
- Applications include: accessing and aggregating data from downstream Modbus devices over serial or across the network (Modbus TCP/IP), logging and/or processing data through totalization, unit conversion or other calculations, applying complex logic for alarming or control operations, and visualization via webpages.

Standard meter I/O

- 8 digital status/counter inputs with ±1 millisecond timestamp.
- 4 solid state digital outputs (Form A) for energy pulsing, interfacing with other systems or control.
- 2 Form C relay outputs for control applications.

Advanced Metering Option Modules

- Expanding meter's flexibility with communication and I/O option modules
- Powered from meter base

I/O Expansion Option Modules

Option modules include:

- Digital module:
  - 6 digital status/counter inputs.
  - 2 Form C relay outputs, 250 V AC, 8 A.
- Analog module:
  - 4 analog inputs (0-20 mA, 4-20 mA; 0-30 V).
  - 2 analog outputs (0-20 mA, 4-20 mA; 0-10 V) for interfacing with building management sensors and systems.

Communication Option Modules

Option modules include:

- 4-Wire RS-485 Module (+1):
  - It adds 4-wire support to the meter i.e. eliminating the cost and efforts of rewiring while replacing/retrofitting legacy 4-Wire RS-485 systems
  - Pluggable screw terminal connector
- Fiber-Ethernet Module (+2):
  - Provides isolated data transmission through fiber optics up to 2000 m length
  - Supports multi-mode 100Base-FX type
  - SC duplex connector

(+1) One of the onboard 2-Wire RS-485 port is disabled with the optional module
(+2) Connected to the meter base using Ethernet patch cable (included with the module)

Maximum of 4 optional modules in total (Fiber-Ethernet, 4-Wires RS-485, I/O modules) can be connected to the meter. Only 1 Fiber-Ethernet and 1 4-Wire RS-485 option module is supported per meter.

*Please refer to the option module **Installation Guides** for more details.*

ION9000 series

Feature guide

General	ION9000	ION9000T
Use on LV, MV, and HV systems	■	■
Current accuracy: 0.1 % reading	■	■
Voltage accuracy: 0.1 % reading	■	■
Active energy accuracy: 0.1 Class	■	■
Number of samples/cycle or sample frequency: 1024	■	■
High-Speed Transient Capture: 10 MHz (200 k for 50 Hz, 167 k for 60 Hz)	-	■
Instantaneous rms values		
Current, voltage, frequency	■	■
Active, reactive, apparent power: Total and per phase	■	■
Power factor: Total and per phase	■	■
Energy values		
Active, reactive, apparent energy	■	■
Settable accumulation modes	■	■
Demand values		
Current: Present and max. values	■	■
Active, reactive, apparent power: Present and max. values	■	■
Predicted active, reactive, apparent power	■	■
Synchronization of the measurement window	■	■
Setting of calculation mode: Block, sliding	■	■
Power Quality measurements		
Harmonic distortion: Current and voltage	■	■
Individual harmonics: via front panel and web page: 63 via EcoStruxure™ software: 511	■	■
Waveform capture	■	■
Detection of voltage swells and sags	■	■
Fast acquisition: 1/2 cycle data	■	■
EN 50160 compliance checking	■	■
Customizable data outputs (using logic and math functions)	■	■
IEEE 519 compliance checking	■	■
Data recording		
Min/max of instantaneous values	■	■
Data logs	■	■
Event logs	■	■
Trending/forecasting	■	■
SER (Sequence of event recording)	■	■
Time stamping	■	■
GPS synchronization (± 1ms)	■	■
Memory: 2000 MB	■	■
Display and I/O		
Front panel display, 2 options: 96 mm & 192 mm	■	■
Pulse output: 2	■	■
Digital or analog inputs(max): 32 digital, 16 analog	■	■
Digital or analog outputs (max, including pulse output): 4 digital, 10 relay, 8 analog	■	■
Communication		
2-Wire RS-485 port	■	■
Ethernet port(s): 2x 10/100BASE-TX, RJ45 connector, CAT5/5e/6/6a cable	■	■
Serial port protocols (Modbus, ION, DNP3, DLMS/COSEM)	■	■
Ethernet port protocols (Modbus, ION, DNP3, DLMS/COSEM, IEC 61850)	■	■
Ethernet gateway	■	■
Alarm notification via email	■	■
HTTP/HTTPS web server with waveform viewer	■	■
SNMP with custom MIB and traps for alarms	■	■
SMTP email	■	■
PTP and NTP time synchronization	■	■
SFTP file transfer	■	■
Option module with 4-Wire RS-485 port	■	■
Option module with Fiber-Ethernet port	■	■

ION9000 series

Technical specifications

Electrical characteristics			ION9000	ION9000T
Type of measurement	True rms to 1,024 samples per cycle		■	■
	High-speed transient detection, 10 MHz, 10 kV		-	■
Measurement accuracy	Current & voltage	Class 0.1 as per IEC 61557-12	■	■
	Active Power	Class 0.1 as per IEC 61557-12	■	■
	Power factor	Class 0.5 as per IEC 61557-12	■	■
	Frequency	Class 0.02 as per IEC 61557-12	■	■
	Active energy	Class 0.1S IEC 62053-22 Class 0.1 IEC 61557-12 Class 0.1 ANSI C12.20	■	■
	Reactive Energy	Class 0.5S IEC 62053-24	■	■
Display refresh rate		HMI display updated once per second; data refresh rate 1/2 cycle or 1 second	■	■
Input-voltage characteristics	Specified accuracy voltage	57 - 400 V L-N / 100 - 690 V L-L	■	■
	Impedance	5 MΩ per phase	■	■
	Specified accuracy frequency	42 to 69 Hz (50/60 Hz nominal)	■	■
	Limit range of operation - frequency	20 to 450 Hz	■	■
Input-current characteristics	Rated nominal current	1 A (0.1S), 5 A (0.1S); current class 2, 10, 20 A (0.1 ANSI)	■	■
	Specified accuracy current range	Starting Current: 1 mA (no accuracy) Accurate Range: 10 mA - 20 A	■	■
	Permissible overload	500 A rms for 1.0s	■	■
	Impedance	0.0003 Ω per phase	■	■
	Burden	0.01 VA max at 5 A	■	■
LV Input-current characteristics	Input voltage range	±5.5 V pk	■ (+3)	-
	Minimum signal	1 mV	■ (+3)	-
	Withstand	30 V pk continuous	■ (+3)	-
	Input impedance	200 k Ω	■ (+3)	-
	Safety	For use with listed Energy Monitoring current transformers	■ (+3)	-
Power supply AC/DC	AC	90-480 V AC ±10 % (50/60 Hz ±10 %) 90-120 V AC ±10% (400 Hz)	■	■
	DC	110-480 V DC ±10 %	■	■
	Ride-through time (Values for meters with no optional accessories)	100 ms (5 cycles at 50/60 Hz) typ., 120 V AC 400 ms (20 cycles at 50/60 Hz) typ., 240 V AC 1,200 ms (60 cycles at 50/60 Hz) typ., 480 V AC	■	■
	Burden	Typical: 16.5 W / 38 VA at 480 V (50/60 Hz) Fully optioned: max. 40 W / 80 VA at 480 V (50/60 Hz).	■	■
Power supply LV DC	DC	20 to 60 V DC ±10 %	■	-
	Burden	Typical: 15 W at 20 to 60 V DC Fully optioned: 38 W at 20 to 60 V DC	■	-
Input/outputs	Meter base Only	8 digital inputs (30 V AC/60 V DC) 4 Form A (KY) solid state digital output (30 V AC/60 V DC, 75 mA) 2 Form C relays (8 A at 250 V AC, 5 A at 24 V DC)	■	■
	Optional	Digital - 6 digital inputs (30 V AC / 60 V DC) wetted + 2 Form C relay outputs (250 V AC, 8 A)	■	■
		Analog - 4 analog inputs (0-20 mA, 4-20 mA, 0-30 V DC) + 2 analog outputs (0-20 mA, 4-20 mA, 0-10 V DC).	■	■

(+3) The LV Input-current option replaces standard CT inputs

ION9000 series

Mechanical characteristics			ION9000	ION9000T
Weight	DIN rail mount meter 1.5 kg IO modules 0.140 kg Touchscreen display 0.300 kg		■	■
IP degree of protection	IP 65, UL type 12: Panel mount and touchscreen display, front. IP 30: Panel mount rear, DIN rail mount, I/O modules.		■	■
Excellent quality	ISO 9001 and ISO 14000 certified manufacturing.		■	■
Dimensions	Panel mount	160 x 160 x 135.3 mm	■	■
	DIN rail mount meter	160 x 160 x 135.3 mm	■	■
	Color remote display (2 options)	197 x 175 x 27.5 mm touchscreen	■	■
	I/O modules	90.5 x 90.5 x 22 mm	■	■
	Touchscreen display(s)	192 mm and 96 mm	■	■
Environmental conditions				
Operating temperature	-25 to 70 ºC		■	■
Remote Display Unit	-25 to 60 ºC		■	■
Storage temperature	-40 to 85 ºC		■	■
Humidity rating	5 to 95 % non-condensing		■	■
Installation category	III		■	■
Operating altitude (maximum)	3,000 m above sea-level		■	■
Electromagnetic compatibility				
EMC standards	IEC 62052-11, IEC 61326-1, IEC 61000-6-5		■	■
Immunity to electrostatic discharge	IEC 61000-4-2		■	■
Immunity to radiated fields	IEC 61000-4-3		■	■
Immunity to fast transients	IEC 61000-4-4		■	■
Immunity to surges	IEC 61000-4-5		■	■
Immunity to conducted disturbances	IEC 61000-4-6		■	■
Immunity to power frequency magnetic fields	IEC 61000-4-8		■	■
Immunity to conducted disturbances, 2-150kHz	CLC/TR 50579		■	■
Immunity to voltage dips & interruptions	IEC 61000-4-11		■	■
Immunity to ring waves	IEC 61000-4-12		■	■
Conducted and radiated emissions	EN 55011 and EN 55032 Class B, FCC part 15 Class B, ICES-003 Class B		■	■
Surge withstand Capability (SWC)	IEEE/ANSI C37.90.1		■	■
Safety				
Safety Construction	IEC/EN 61010-1 ed.3, CAT III, 400 V L-N / 690 V L-L, UL 61010-1 ed.3 and CSA-C22.2 No 61010-1 ed.3, CAT III, 347 V L-N / 600 V L-L, IEC/EN 62052-31, protective class II		■	■
Communication				
Ethernet to serial line gateway	Communicates directly with up to 31 serial devices		■	■
Web server	Customizable pages, new page creation capabilities, HTML/XML compatible		■	■
Serial port RS-485	2x, Baud rates of 2,400 to 115,200, pluggable screw terminal connector		■	■
Ethernet port(s)	2x 10/100BASE-TX, RJ45 connector, CAT5/5e/6/6a cable		■	■
Protocol	HTTPS, SFTP, SNMP, SMTP, DPWS, RSTP, PTP, NTP/SNTP, GPS, Syslog, DHCP, IPv4, IPv6		■	■
Communication option module				
Optional port 4-Wire RS-485	Baud rates of 2400 to 115200, pluggable screw terminal connector		■	■
Optional Fiber-Ethernet port	Ethernet patch cable from base meter, multi-mode 100Base-FX, SC duplex connector		■	■

ION9000 series

Firmware characteristics		ION9000	ION9000T
High-speed data recording	Down to 1/2 cycle interval recording, stores detailed characteristics of disturbances or outages. Trigger recording by a user-defined setpoint, or from external equipment	■	■
Harmonic distortion	Up to 63rd harmonic (511th via Schneider Electric EcoStruxure™ software) for all voltage and current inputs	■	■
Sag/swell detection	Analyze severity/potential impact of sags and swells: magnitude and duration data suitable for plotting on voltage tolerance curves per phase triggers for waveform recording	■	■
Disturbance direction detection	Determine the location of a disturbance more quickly and accurately by determining the direction of the disturbance relative to the meter. Results are captured in the event log, along with a timestamp and confidence level indicating level of certainty	■	■
Detection & capture of transients	As short as 20 µs at 50 Hz (17 µs at 60 Hz)	■	■
High-speed transient capture	Detection and capture of high-speed impulsive and oscillatory transients as short as 100 ns in duration and up to 10 kV in magnitude	-	■
Instantaneous	High accuracy of standard speed (1s) and high-speed (1/2 cycle) measurements, including true rms per phase and total for: voltage, current, active power (kW),reactive power (kvar), apparent power (kVA), power factor, frequency, voltage and current unbalance, phase reversal	■	■
Load profiling	Channel assignments (1600 channels via 100 recorders) configurable for any measurable parameter, including historical trend recording of energy, demand, voltage, current, power quality, or any measured parameter. Trigger recorders based on time interval, calendar schedule, alarm/event condition, or manually	■	■
Trend curves	Historical trends and future forecasts to better manage demand, circuit loading, and other parameters. Provides average, min, max, and standard deviation every hour for last 24 hours, every day for last month, every week for last 8 weeks and every month for last 12 months	■	■
Waveform captures	Simultaneous capture of voltage and current channels, sub-cycle disturbance captures of 180-cycles @ 1,024 samples/cycle to 7,200-cycles @ 16 sample/cycle, retriggerable	■	■
High-speed transient waveform captures	Simultaneous capture of voltage channels, impulsive and oscillatory transient capture of up to 1-cycle @ 200 k samples per cycle (50 Hz) along with coincidence disturbance waveform capture	-	■
Alarms	Threshold alarms: adjustable pickup and dropout setpoints and time delays, numerous activation levels possible for a given type of alarm, user-defined or automatic alarm threshold settings, user-defined priority levels (optional automatic alarm setting)	■	■
Advanced Time of Use (TOU)	4 seasons; 5 different day types: weekend, weekday, and holiday; up to 4 tariffs per day type	■	■
Advanced network security	Up to 50 users with unique access rights. Perform resets, time sync, or meter configurations based on user privileges	■	■
Memory	2,000 MB	■	■
Firmware update	Update via the communication ports	■	■
Display characteristics			
96 mm pushbutton display	320 x 240 (1/4 VGA) color LCD, configurable screens, 5 buttons and 2 LED indicators (alarm and meter status)	■	■
192 mm touchscreen display	800 x 480 pixels, 177.8 mm (7") Color LCD, +/- 85 degree view angle, sunlight readable, dual capacitive touch, usable when wet or through Class 0 lineman gloves, impact resistant to 5 joules, IP65 rating	■	■
Languages	English, French, Spanish, Russian, Portuguese, German, Italian, Chinese	■	■
Notations	IEC, IEEE	■	■

ION9000 series

ION9000 Commercial reference numbers

Comm ref number	Description
METSEION92030	ION9000 meter, DIN mount, no display, hardware kit
METSEION92040	ION9000 meter, DIN mount, 192 mm display, B2B adapter, hardware kit
METSEION92043	ION9000 meter, DIN mount, 192 mm display, B2B adapter, hardware kit, Measurement Canada Ready (Canada only)
METSEION92044	ION9000 meter, DIN mount, 192 mm display, B2B adapter, hardware kit, Measurement Canada Sealed (Canada only)
METSEION92130	ION9000 Meter, 20-60 Vdc control input, DIN mount, no display, hardware kit
METSEION92140	ION9000 Meter, 20-60 Vdc control input, DIN mount, 192 mm display, B2B adapter, hardware kit
METSEION93030	ION9000 meter, LVCS, DIN mount, no display, hardware kit
METSEION93040	ION9000 meter, LVCS, DIN mount, 192 mm display, B2B adapter, hardware kit
METSEION93130	ION9000 Meter, LVCS, 20-60 Vdc control power, DIN mount, no display, hardware kit
METSEION93140	ION9000 Meter, LVCS, 20-60 Vdc control power, DIN mount, 192 mm display, B2B adapter, hardware kit
METSEION95030	ION9000T meter, HSTC, DIN mount, no display, hardware kit
METSEION95040	ION9000T meter, HSTC, DIN mount, 192 mm display, B2B adapter, hardware kit
METSERD192	Remote display, color touchscreen, 192 x 192 mm
METSEPM89RD96	Remote display, color LCD, 96 x 96 mm
METSEPM89M2600	I/O module, 2 relay outputs, 6 digital inputs
METSEPM89M0024	I/O module, 2 analog outputs, 4 analog inputs
METSE9HWK	ION9000 meter hardware kit – plugs, terminal guards, spare grounding screw, DIN clips
METSE9CTHWK	ION9000 Current Input hardware kit - terminal screws, CT covers
METSERD192HWK	RD192 remote display hardware kit
METSE9B2BMA	ION9000 B2B (back to back) mounting adapter
METSE9HWKLVCS	ION9000 hardware kit for LVCS
METSE9USBK	ION9000 USB cover hardware kit
METSE7X4MAK	ION7X50 mounting adapter kit
METSEPMRS4854W	4-Wire RS 485 option module
METSEPMFIBER	Fiber-Ethernet option module

Contact your Schneider Electric representative for complete ordering information.

ION9000 series

ION9000 meter dimensions

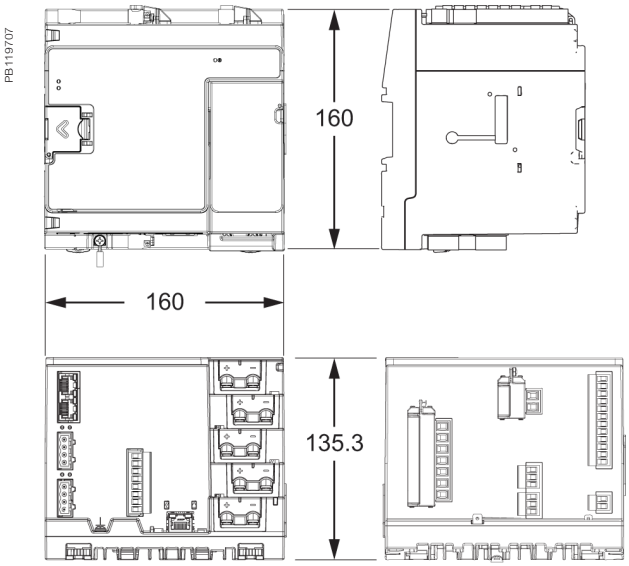

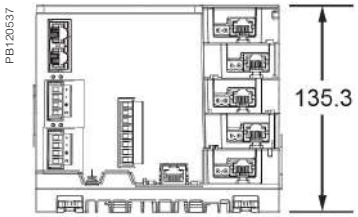

LVCS Input-current option

ION9000 mounting template

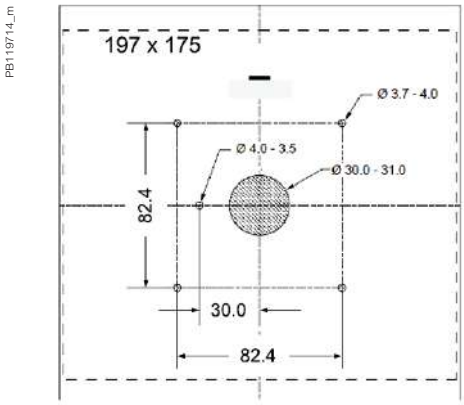

ION9000 back-to-back (B2B) dimensions

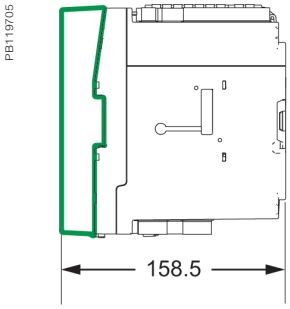

ION9000 192 mm display dimensions

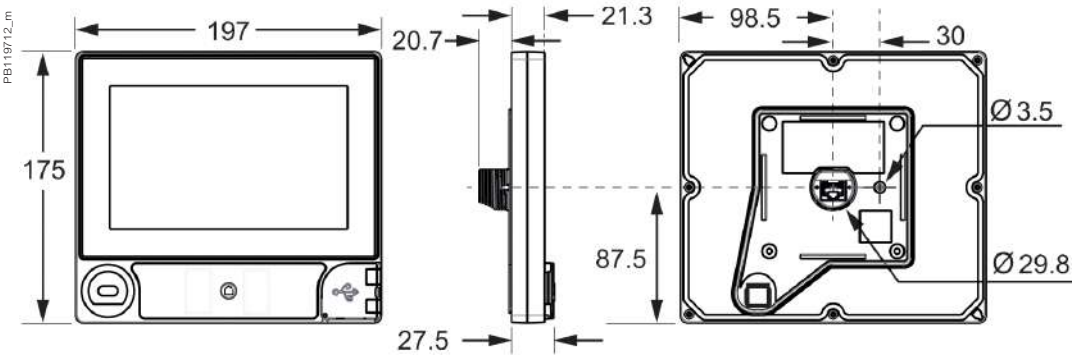

ION9000 96 mm display dimensions

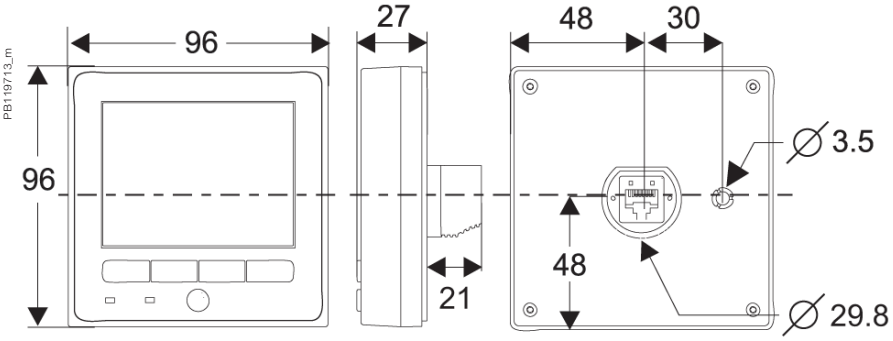

*Please refer to ION9000 Series Meter **Installation Sheet** for accurate and complete information on the installation of this product.*

ION9000 series

ION9000 meter DIN rail dimensions

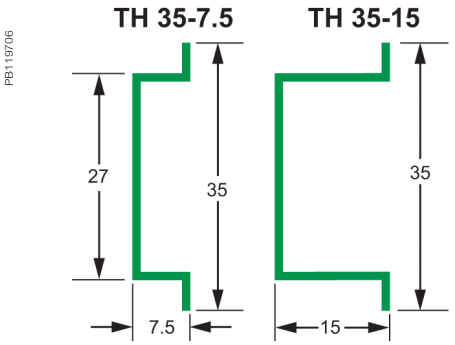

ION7x50 mounting adapter dimensions

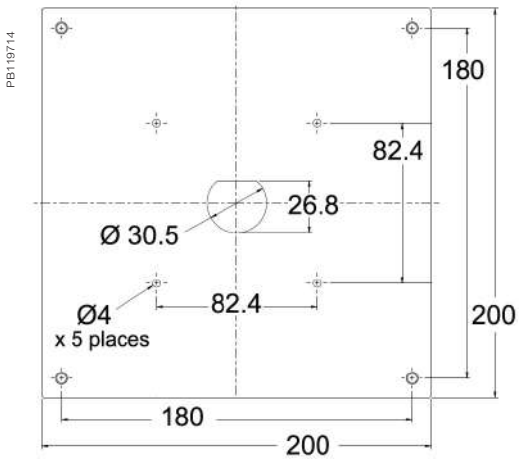

ION9000 LV Current Input wiring options

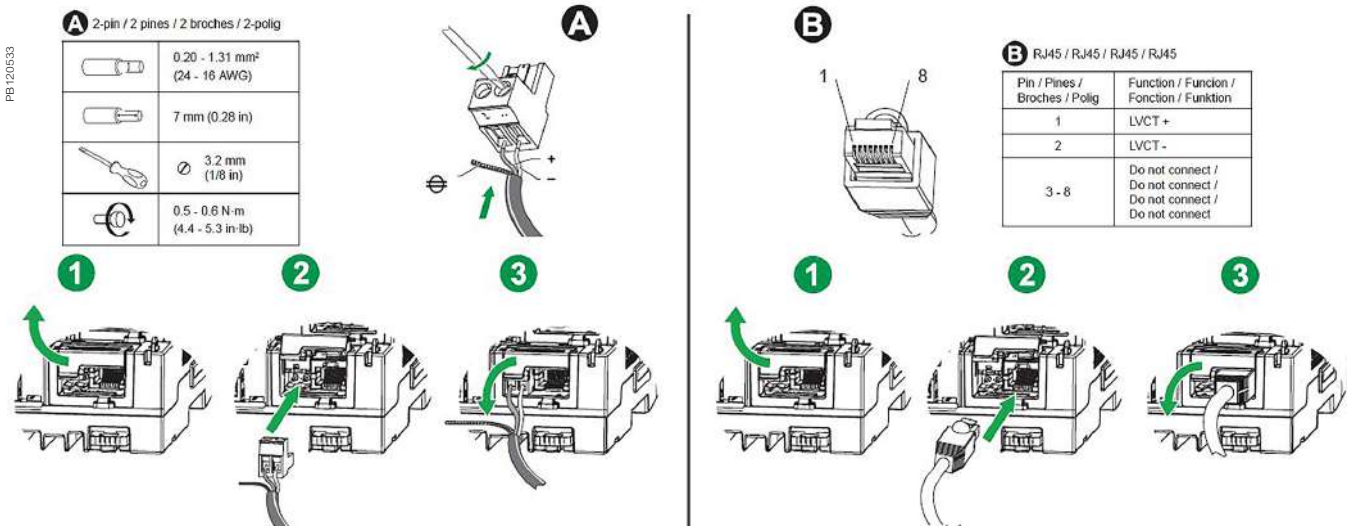

ION9000 with communication option modules

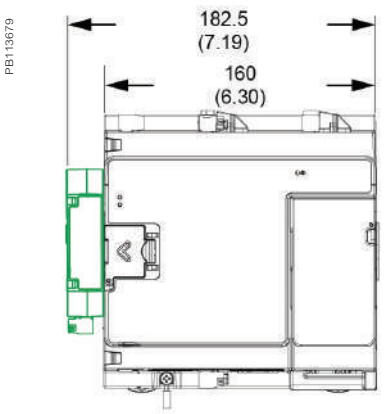

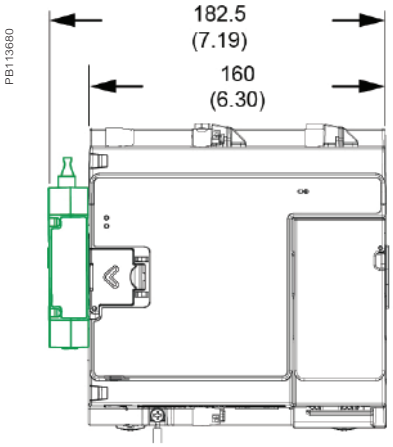

Advanced Utility Metering

Power quality and revenue meters are designed for utility network monitoring, e.g. transmission and distribution network monitoring.

Revenue and power quality meters designed for precision metering at key transmission network inter-ties, distribution substations and service entrances to optimise power reliability and energy efficiency in utility smart grids.

- PowerLogic™ ION7400
- PowerLogic™ ION8650

PB115152

ION7400

PB107500

ION8650

PowerLogic™ ION7400 series

Providing high accuracy and a wide range of features for transmission and distribution metering, the versatile PowerLogic™ ION7400 series advanced utility meter has the flexibility to change along with your needs.

- Compact 3-phase, multifunction energy and power quality compliance
- Flexible and modular installation with object-oriented intelligence
- Accurate, precise, and highly adaptable metering

Applications

- Substation feeder metering
- Revenue metering
- Extensive power quality monitoring and cause analysis
- End feeder line monitoring
- Digital fault recording

PB115152

METSEION7400

ION7400 series

The solution for

Markets that can benefit from a solution that includes PowerLogic™ ION7400 series meters:

- Transmission networks
- Distribution network

Benefits

- Reduce operations costs
- Improve power quality
- Improve continuity of service

Competitive advantages

- Be able to use Power Monitoring Expert software for data analysis or share operation data with SCADA systems through multiple communication channels and protocols
- Transformer/line loss compensation
- Instrument transformer correction
- Utilize Disturbance Direction Detection to help locate fault

Power management solutions

Schneider Electric provides innovative power management solutions to increase your energy efficiency and cost savings, maximise electrical network reliability and availability, and optimise electrical asset performance.

Conformity of standards

- ANSI C12.20
- CLC/TTR50579
- EN 50160
- IEC 61000-4-7
- IEC 61000-4-15
- IEC 61000-4-30
- IEC 61010-1
- IEC 61326
- IEC 61557-12
- IEC 61850
- IEC 62052-11
- IEC 62053-22
- IEC 62053-23
- IEC 62586
- IEEE 519

PB113696

PowerLogic™ ION7400 DIN rail mounted meter- bottom view

PB115161

PowerLogic™ ION7400 meter - rear view

PB115162_1

PowerLogic™ ION7400 DIN rail mounted meter

ION7400 series

PB115152

PowerLogic™ ION7400 meter showing active alarms.

PB115153

PowerLogic™ ION7400 with Harmonics display.

PB115159

PowerLogic™ ION7400 series meter with phasor display.

Applications and benefits

- Maximize profits by providing the highest output possible with the least amount of risk to availability
- Optimize availability and reliability of electrical systems and equipment
- Monitor power quality (PQ) for compliance and to prevent problems
- Meters fully supported by EcoStruxure™ Power Monitoring Expert and EcoStruxure™ Power Operation software

Main characteristics

- Precision metering:
  - IEC 61557-12 PMD/Sx/K70/0.2 3000m (performance measuring and monitoring functions)
  - IEC 62053-22 for active energy Class 0.2s accuracy and 0.5s accuracy, ANSI C12.20 Class 0.2 for active energy
  - IEC 62053-23 for reactive energy Class 2 accuracy and Class 3
  - Cycle-by-cycle RMS measurements updated every ½ cycle
  - Full 'multi-utility' WAGES metering support
  - Net metering
  - Anti-tamper protection seals and hardware metrology lock
  - Test mode
- PQ Compliance and basic PQ analysis.
  - Monitors and logs parameters in support of international PQ standards,
    - IEC 61000-4-30 Class S
    - IEC 61000-4-15 Flicker
    - IEC 62586
    - EN 50160
  - Generates onboard PQ compliance reports accessible via onboard web pages:
    - Basic event summary and pass/fail reports, such as EN 50160 for power
    - Frequency, supply voltage magnitude, supply voltage dips, short and long interruptions, temporary over voltages, voltage unbalance and harmonic voltage
    - ITIC (CBEMA) and SEMI curves, with alarm categorization to support further analyses
    - Basic meter provides EN 50160 but can be configured to provide IEEE 519
  - Harmonic analysis:
    - THD on voltage and current, per phase, min/max, custom alarming
    - Individual harmonic magnitudes and angles on voltage and current, up to the 63rd harmonic (up to 127th via EcoStruxure™ software).
  - High resolution waveform capture: triggered manually or by alarm, captured waveforms available directly from the meter via FTP in COMTRADE format or can be viewed via onboard webpages
  - Disturbance detection and capture: sag/swell on any current and voltage channel, alarm on disturbance event, waveform capture with pre-event information
  - Patented Disturbance Direction Detection: provides indication of the captured disturbance occurring upstream or downstream of the meter; timestamped results provided in the event log, with degree of certainty of disturbance direction
- Used with EcoStruxure™ Power Monitoring Expert software, provides detailed PQ reporting across entire network:
  - EN 50160 report
  - IEC 61000-4-30 report
  - PQ compliance summary
  - Display of waveforms and PQ data from all connected meters.
- Onboard data and event logging
  - 512 MB of standard non-volatile memory
  - No data gaps due to network outages or server downtime
  - Min/Max log for standard values

ION7400 series

PB117743

PowerLogic™ remote display.

PB117739

PowerLogic™ ION7400 meter with remote display.

PB113700

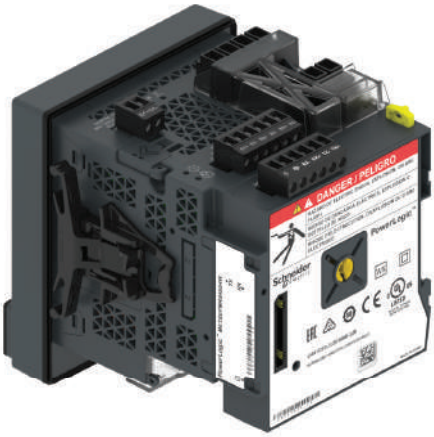

PowerLogic™ ION7400 with RS-485 4-Wire module

PB113701

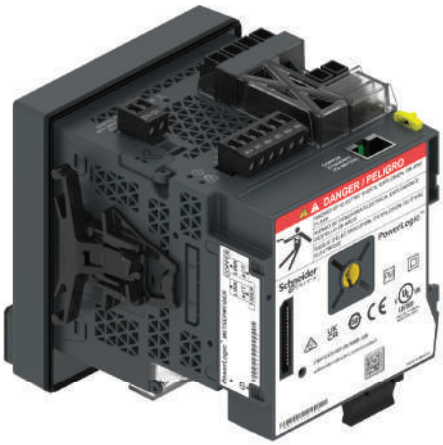

PowerLogic™ ION7400 with Fiber-Ethernet Module

- Up to 64 user definable data logs, recording up to 16 parameters on a cycle-by-cycle or other user definable interval
- Continuous logging or 'snapshot' triggered by setpoint and stopped after defined duration
- Trend energy, demand and other measured parameters
- Forecasting via web pages: average, minimum and maximum for the next four hours and next four days
- Time-of-use in conjunction with EcoStruxure™ software
- Event log: alarm conditions, metering configuration changes, and power outages, timestamped to 1 millisecond

- Alarming and control.
  - 50+ definable alarms to log critical event data, trigger waveform recording, or perform control function
  - Trigger on any condition, with cycle-by-cycle and 1-second response time
  - Combine alarms using Boolean logic and to create alarm levels
  - Alarm notification via email text message
  - In conjunction with EcoStruxure™ Power Monitoring Expert, software alarms and alarm frequency are categorized and trended for easy evaluation of worsening/improving conditions

- Excellent quality: ISO 9001 and ISO 14000 certified manufacturing

Usability

- Easy installation and setup
  - Panel and DIN rail mounting options, remote display option
  - Pluggable connectors
  - Free setup application simplifies meter configuration

- Front panel
  - Easy to read color graphic display
  - Simple, intuitive menu navigation with multi-language (8) support
  - Optical port
  - 2 energy pulsing LEDs
  - Alt/Norm screens.

- Flexible remote communications
  - Multiple simultaneously operating communication ports and protocols allow interfacing with other automation systems; (e.g. waveforms, alarms, billing data, etc.) can be uploaded for viewing/analysis while other systems access real-time information
  - Supports Modbus, ION, DNP3, IEC 61850, MV-90
  - Dual port Ethernet: 10/100BASE-TX; daisy-chaining capability removes need for additional switches
  - Fiber-Ethernet option module: Multi-mode 100Base-FX with SC duplex connector
  - Create redundant network loop using Rapid Spanning Tree Protocol (RSTP) and managed Ethernet switches
  - Customize TCP/IP port numbers enable/disable individual ports
  - RS-485 2-wire connection, up to 115200 baud, Modbus RTU and ION protocols, DNP3 is also supported via RS-485.
  - 4-Wire RS-485 option module: up to 115200 baud, Modbus RTU and ION protocols, DNP3 is also supported via RS-485.
  - Ethernet to serial gateway with Modbus Master functionality, connecting to 31 downstream serial Modbus devices. Also supports Modbus Mastering over TCP/IP (Ethernet) network.
  - Full function web server with factory and customizable pages to access real-time and PQ compliance data.

- Time synchronization via:
  - GPS clock (RS-485) or IRIG-B (digital input) to +/- 1 millisecond.

Also supports Network Time Protocol (NTP/SNTP) and time set function from EcoStruxure™ software server.

ION7400 series

PB113671_1

PowerLogic™ I/O module

PB113672

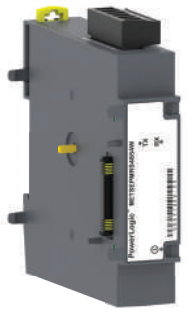

4-Wire RS-485 Option Module

PB113673

Fiber-Ethernet Option Module

PB113678

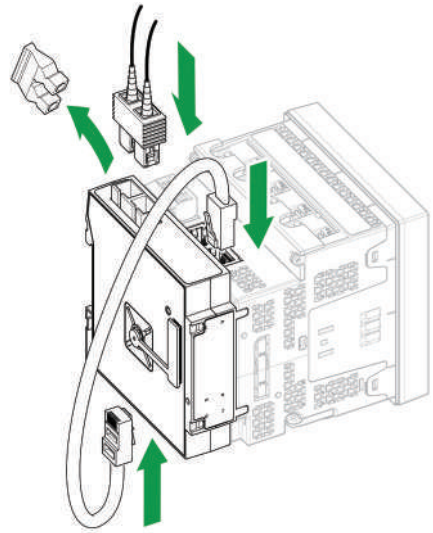

PowerLogic™ ION7400 connection with Fiber-Ethernet

Adaptability

- ION™ frameworks are customizable, scalable applications with object-oriented programming that compartmentalizes functions, and increases flexibility and adaptability.
- Applications include: accessing and aggregating data from downstream Modbus devices over serial or across the network (Modbus TCP/IP), logging and/or processing data through totalization, unit conversion or other calculations, applying complex logic for alarming or control operations, and visualization via webpages.

Standard meter I/O

- 3 digital status/counter inputs.
- 1 KY (form A) energy pulse output for interfacing with other systems.

Advanced Metering Option Modules

- Expanding meter's flexibility with communication and I/O option modules
- Powered from meter base

I/O Expansion Option Modules

Option modules include:

- Digital module:
  - 6 digital status/counter inputs.
  - 2 Form C relay outputs, 250 V, 8 A.
- Analog module:
  - 4 analog inputs (4-20 mA; 0-20 mA; 0-30 V).
  - 2 analog outputs (4-20 mA; 0-20 mA; 0-10 V) for interfacing with building management sensors and systems.

Communication Option Modules

Option modules include:

- 4-Wire RS-485 Module (+1):
  - Adds 4-wire support to the meter i.e. eliminating the cost and efforts of rewiring while replacing/retrofitting legacy 4-Wire RS-485 systems
  - Pluggable screw terminal connector
- Fiber-Ethernet Module (+2):
  - Provides isolated data transmission through fiber optics up to 2000 m length
  - Supports multi-mode 100Base-FX type
  - SC duplex connector

Standards

- IEC 61000-4-30
- IEC 61000-4-7
- IEC 61000-4-15
- IEC 61326-1
- ANSI C12.20
- IEC 62052-11
- IEC 62053-22
- IEC 62053-23
- CLC/TR50579

Languages supported

- English, French, Spanish, Chinese, Italian, German, Russian, Portuguese

(+1) Onboard 2-Wire RS-485 port is disabled with optional module
(+2) Connected to the meter base using Ethernet patch cable (included with the module)

Maximum of 4 optional modules in total (Fiber-Ethernet, 4-Wires RS-485, I/O modules) can be connected to the meter. Only 1 Fiber-Ethernet and 1 4-Wire RS-485 option module is supported per meter.

*Please refer to the option module **Installation Guides** for more details.*

ION7400 series

Feature guide

		ION7400 ESSENTIAL	ION7400 STANDARD	ION7400 ADVANCED
General				
Use on LV and MV systems		■	■	■
Current accuracy (5 A Nominal)		0.1 % reading	0.1 % reading	0.1 % reading
Voltage accuracy (90-690 V AC L-L, 50, 60, 400 Hz)		0.1 % reading	0.1 % reading	0.1 % reading
Active energy accuracy		0.2 Class	0.2 Class	0.2 Class
Reactive energy accuracy		2 %	2 %	2 %
Number of samples/cycle or sample frequency		256 (+3)	256	512
ION programability		■	■	■
Instantaneous rms values				
Current, voltage, frequency		■	■	■
Active, reactive, apparent power	Total and per phase	■	■	■
Power factor	Total and per phase	■	■	■
Current measurement range (autoranging)		0.05 A - 10 A	0.05 A - 10 A	0.05 A - 10 A
Energy values				
Active, reactive, apparent energy		■	■	■
Settable accumulation modes		■	■	■
Demand values				
Current	Present and max. values	■	■	■
Active, reactive, apparent power	Present and max. values	■	■	■
Predicted active, reactive, apparent power		■	■	■
Synchronisation of the measurement window		■	■	■
Setting of calculation mode	Block, sliding	■	■	■
Power quality measurements				
Harmonic distortion	Current and voltage	■	■	■
Individual harmonics	Via front panel and web page	31	63	63
	Via EcoStruxure™ software	-	127	127
Waveform capture		■ (+3)	■	■
Detection of voltage swells and sags		■	■	■
Flicker		-	■	■
Fast acquisition	1/2 cycle data	■	■	■
IEC61000-4-30 Class A/S		-	S	A
EN 50160 compliance checking		-	■	■
IEEE 519 compliance checking		-	■	■
Disturbance Direction Detection		-	■	■
Rapid Voltage Change		-	■	■
Customizable data outputs (using logic and math functions)		■	■	■
Data recording				
Min/max of instantaneous values		■	■	■
Data logs		■	■	■
Event logs		■	■	■
Trending/forecasting		-	■	■
SER (Sequence of event recording)		■	■	■
Time stamping		■	■	■
GPS synchronisation (±1 ms)		■	■	■
Data Recorder		10	50	64
Memory Channels		160	800	1024
Storage (in Mbytes)		64	512	512

(+3) Waveform capture is limited to 128 Samples/cycle recording.

ION7400 series

Feature guide (Contd.)

	ION7400 ESSENTIAL	ION7400 STANDARD	ION7400 ADVANCED
Display and I/O			
Front panel display 89 mm TFT	■	■	■
Wiring self-test	■	■	■
Pulse output	1	1	1
Digital or analog inputs (max)	27 digital 16 analog	27 digital 16 analog	27 digital 16 analog
Digital or analog outputs (max, including pulse output)	1 digital 8 relay 8 analog	1 digital 8 relay 8 analog	1 digital 8 relay 8 analog
Communication			
2-Wire RS-485 port	1	1	1
10/100BASE-TX	2	2	2
Serial port (Modbus, ION, DNP3, DLMS/COSEM)	■	■	■
Ethernet port (Modbus/TCP, ION TCP, DNP3 TCP, IEC 61850, DLMS/COSEM)	■	■	■
USB port (mini type B)	■	■	■
ANSI C12.19 Optical port	■	■	■
Option module with 4-Wire RS-485 port	■	■	■
Option module with Fiber-Ethernet port	■	■	■

Feature selection

Commercial reference number	ION7400 meters
ION74xxE	Essential Feature Set
ION74xx	Standard Feature Set
ION74xxA	Advanced Feature Set

Commercial references

Essential	Standard	Advanced	Description
METSEION7400E	METSEION7400	METSEION7400A	ION7400 Panel mount meter (integrated display with optical port and 2 energy pulse LEDs)
METSEION7410E	METSEION7410	METSEION7410A	ION7400 Panel mount meter (integrated display with optical port and 2 energy pulse LEDs) 20-60 V DC control power
METSEION7403E	METSEION7403	METSEION7403A	DIN rail mount - utility meter base
METSEION7404E	METSEION7404	METSEION7404A	DIN rail mount - utility meter base with remote display
METSEION7413E	METSEION7413	METSEION7413A	DIN rail mount - utility meter base 20-60 V DC control power
METSEION74001E	METSEION74001	METSEION74001A	MID approved panel mount meter (+4)
METSEION74003E	METSEION74003	-	RMICAN sealed panel mount meter (+5)
METSEION74004E	METSEION74004	-	RMICAN sealed panel mount meter (+5)

Accessories	Description
METSEPM89RD96	Remote display, 3 metre cable, mounting hardware for 30 mm hole (nut & centering pin), mounting hardware for DIN96 cutout (92 x 92 mm) adapter plate
METSEPM89M2600	Digital I/O module (6 digital inputs & 2 relay outputs)
METSEPM89M0024	Analog I/O module (4 analog inputs & 2 analog outputs)
METSECAB10	Display Cable, 10 m
METSEPMRS4854W	4-Wire RS 485 option module
METSEPMFIBER	Fiber-Ethernet option module
METSEPM8000SK	Sealing kit

(+4) For UK + EU only.
(+5) For Canada only.

ION7400 series

Technical Specifications

Electrical characteristics		ION7400
Type of measurement		True rms to 512 samples per cycle
Measurement accuracy	Current & voltage	Class 0.2 as per IEC 61557-12
	Active Power	Class 0.2 as per IEC 61557-12
	Power factor	Class 0.5 as per IEC 61557-12
	Frequency	Class 0.2 as per IEC 61557-12
	Active energy	Class 0.2S IEC 62053-22 (In=5A) Class 0.2 IEC 61557-12, ANSI C12.20 Class 0.2
	Reactive Energy	Class 2 IEC 62053-23
Data update rate		1/2 cycle or 1 second
Input-voltage characteristics	Specified accuracy voltage	57 V L-N/100 V L-L to 400 V L-N/690 V L-L
	Impedance	5 MΩ per phase
	Specified accuracy frequency - Frequency	42 to 69 Hz (50/60 Hz nominal)
	Limit range of operation - frequency	20 Hz to 450 Hz
Input-current characteristics	Rated nominal current	1 A (0.2S), 5 A (0.2S) , 10 A (0.2 ANSI)
	Specified accuracy current range	Starting Current: 5 mA Accurate Range: 50 mA - 10 A
	Permissible overload	200 A rms for 0.5s, non-recurring
	Impedance	0.0003 Ω per phase
	Burden	0.024 VA at 10 A
Power supply	AC/DC	90-415 V AC ±10 % 16 VA at 230 V (50/60 Hz ±10%), 110-300 V DC ±10% 18 W (max)
	LV DC	20–60 V DC, ±10 %,18 W (max)
	Ride-through time	100 ms (6 cycles at 60 Hz) min., any condition 200 ms (12 cycles at 60 Hz) typ., 120 V AC, 110-415 V DC 500 ms (30 cycles at 60 Hz) typ., 415 V AC
	Burden	Meter Only: 18 VA max at 415 V AC, 6W at 300 V DC Fully optioned meter: 36 VA max at 415 V AC, 17 W at 300 V DC.
Input/outputs	Meter Base Only	3 form A digital inputs (30 V AC/60 V DC) 1 form A (KY) solid state digital output (30 V AC/60 V DC, 75 mA).
	Optional	Digital - 6 form A digital inputs (30 V AC / 60 V DC) wetted + 2 form C relay outputs (250 V AC / 30 V DC, 8 A at 250 V AC or 5 A at 24 V DC)
		Analog - 4 analog inputs (4-20 mA, 0-30 V DC) + 2 analog outputs (4-20 mA, 0-10 V DC).
Mechanical characteristics		
Weight		Integrated Display Model 0.710 kg (without option modules) DIN rail mounted Model 0.530 kg (without remore display or option modules) IO modules 0.140 kg Remote display 0.300 kg
IP degree of protection		IP 54, UL type 12: Panel mount and Remote display, front. IP 30: Panel mount rear, DIN rail mount, I/O modules.
Dimensions	Panel mount model	98 x 112 x 78.5 mm
	DIN model	90.5 x 90.5 x 90.8 mm
	Remote display	96 x 96 x 27 mm
	IO modules	90.5 x 90.5 x 22 mm
Environmental conditions		
Operating temperature		-25 ºC to 70 ºC
Remote Display Unit		-25 ºC to 60 ºC
Storage temperature		-40 ºC to 85 ºC
Humidity rating		5 % to 95 % non-condensing
Installation category		III
Operating altitude (maximum)		3000 m above sea level

ION7400 series

Technical Specifications (Contd.)

Electromagnetic compatibility	
Product standards	IEC 62052-11 and IEC 61326-1
Immunity to electrostatic discharge	IEC 61000-4-2
Immunity to radiated fields	IEC 61000-4-3
Immunity to fast transients	IEC 61000-4-4
Immunity to surges	IEC 61000-4-5
Immunity to conducted disturbances	IEC 61000-4-6
Immunity to power frequency magnetic fields	IEC 61000-4-8
Immunity to conducted disturbances, 2-150kHz	CLC/TR 50579
Immunity to voltage dips & interruptions	IEC 61000-4-11
Immunity to ring waves	IEC 61000-4-12
Conducted and radiated emissions	EN 55022, EN 55011, FCC part 15, ICES-003
Surge withstand Capability (SWC)	IEEE C37.90.1
Safety	
Safety Construction	IEC/EN 61010-1 ed.3, CAT III, 400 V L-N / 690 V L-L UL 61010-1 ed.3 and CSA-C22.2 No. 61010-1 ed.3, CAT III, 347 V L-N / 600 V L-L IEC/EN 62052-11, protective class II
Communication	
Ethernet to serial line gateway	Communicates directly with up to 32 unit load ION client devices.
Web server	Customisable pages, new page creation capabilities, HTML/XML compatible.
Serial port RS 485	Baud rates of 2400 to 115200, pluggable screw terminal connector.
Ethernet port(s)	2 x 10/100BASE-TX, RJ45 connector (UTP).
USB port	Virtual serial port supports USB 3.0, 2.0, 1.1 using ION protocol.
Protocol	Modbus, ION, DNP3, IEC 61850, MV-90, DLMS/COSEM, HTTPS, SFTP, SNMP, SMTP, DPWS, RSTP, NTP, SNTP, GPS protocols.
Communication option modules	
Optional 4-Wire RS-485 serial port	Baud rates of 2400 to 115200, pluggable screw terminal connector.
Optional Fiber-Ethernet port	Ethernet patch cable from meter base, multi-mode 100Base-FX, SC duplex connector
Firmware characteristics	
High-speed data recording	Down to 1/2 cycle interval burst recording, stores detailed characteristics of disturbances or outages. Trigger recording by a user-defined setpoint, or from external equipment.
Harmonic distortion	Up to 63rd harmonic (via EcoStruxure™ software) for all voltage and current inputs.
Sag/swell detection	Analyse severity/potential impact of sags and swells: magnitude and duration data suitable for plotting on voltage tolerance curves per phase triggers for waveform recording, control.
Disturbance direction detection	Determine the location of a disturbance more quickly and accurately by determining the direction of the disturbance relative to the meter. Analysis results are captured in the event log, along with a timestamp and confidence level indicating level of certainty.
Instantaneous	High accuracy of standard speed (1s) and high-speed (1/2 cycle) measurements, including true rms per phase and total for: voltage, current, active power (kW),reactive power (kvar), apparent power (kVA), power factor, frequency, voltage and current unbalance, phase reversal.
Load profiling	Channel assignments (1024 channels via 64 data recorders) configurable for any measurable parameter, including historical trend recording of energy, demand, voltage, current, power quality, or any measured parameter. Trigger recorders based on time interval, calendar schedule, alarm/event condition, or manually.
Trend curves	Historical trends and future forecasts to better manage demand, circuit loading, and other parameters. Provides average, min, max and standard deviation every hour for last 24 hours, every day for last month, every week for last 8 weeks and every month for last 12 months.
Waveform captures	Simultaneous capture of all voltage and current channels sub-cycle disturbance capture, maximum cycles is 100,000 (16 samples/cycle x 96 cycles, 10 MB memory), max 512 samples/cycle.
Alarms	Threshold alarms: adjustable pickup and dropout setpoints and time delays, numerous activation levels possible for a given type of alarm, user-defined or automatic alarm threshold settings, user-defined priority levels (optional automatic alarm setting).

All the communication ports may be used simultaneously.

ION7400 series

ION7400 meter parts descriptions

PB115154

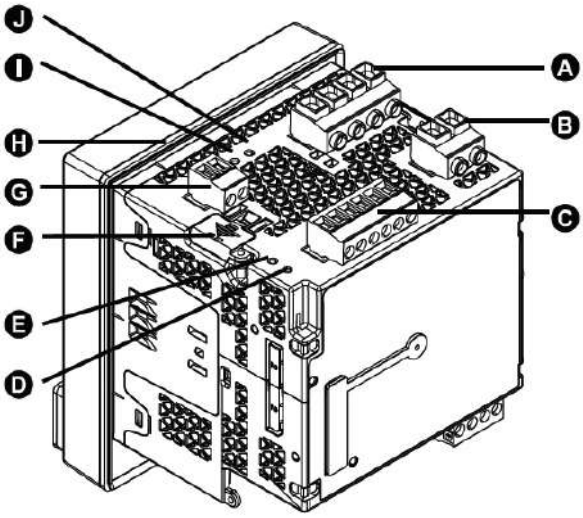

PB115155

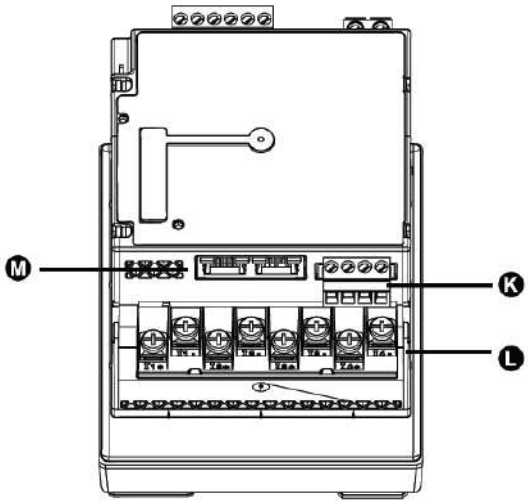

PB115156

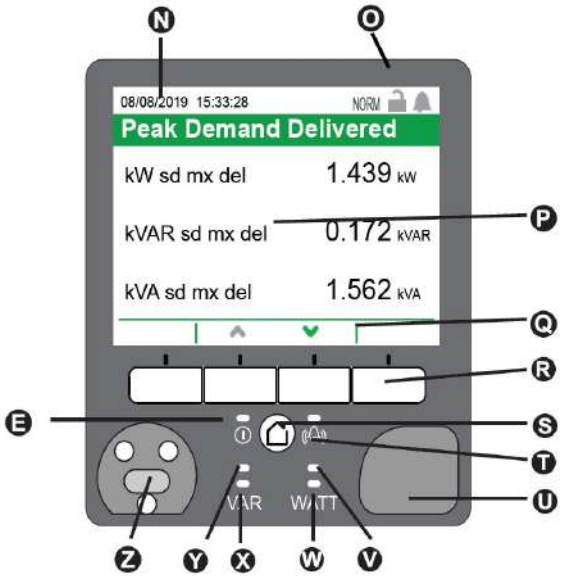

- A Voltage inputs
- B Control power
- C Digital inputs
- D Revenue lock LED
- E Status LED (2 green/red)
- F Revenue lock switch
- G Digital output
- H Sealing gasket
- I Infrared energy pulsing LED
- J Energy pulsing LED
- K RS-485
- L Current inputs
- M Ethernet (2)
- N Date/time
- O Indicator icons

- P Display
- Q Navigation icons

- R Navigation buttons
- S Home button
- T Alarm LED (red)
- U USB ports cover
- V Watt energy pulsing LED
- W Watt infrared energy pulsing LED
- X VAR infrared energy pulsing LED
- Y VAR energy pulsing LED
- Z Optical port

ION7400 series

ION7400 meter dimensions

PB115157_m

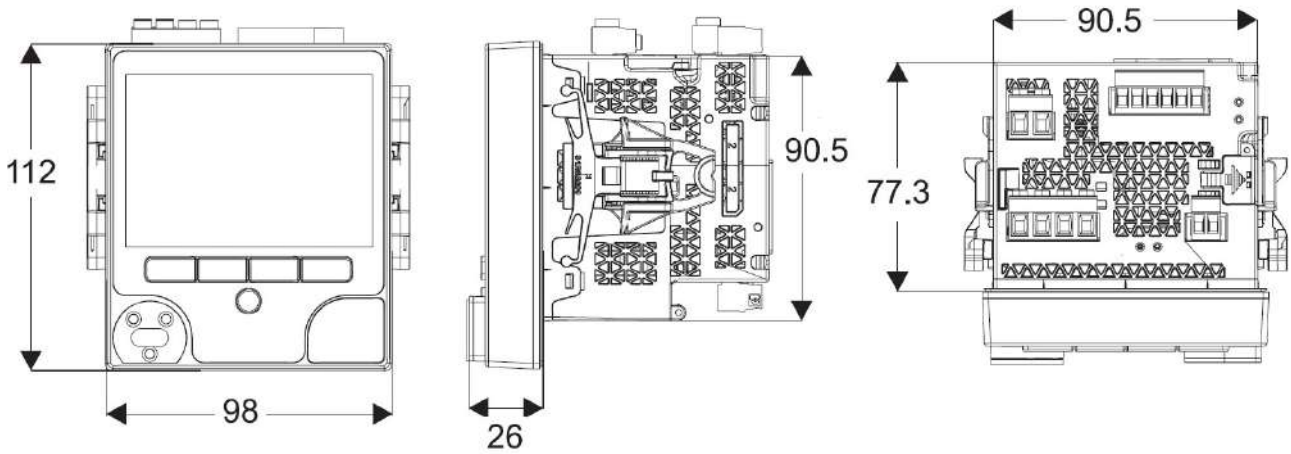

ION7400 panel cutout dimensions

PB115158

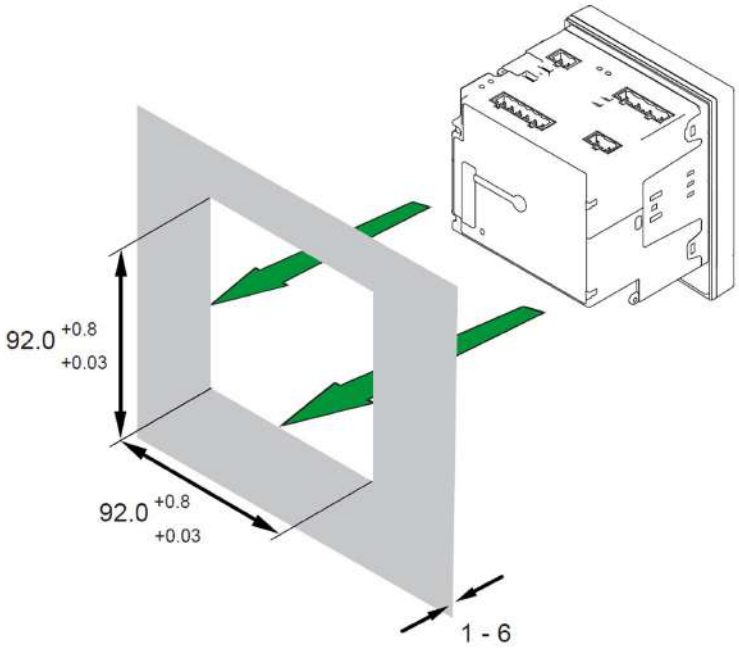

ION7400 with communication option modules

PB113676

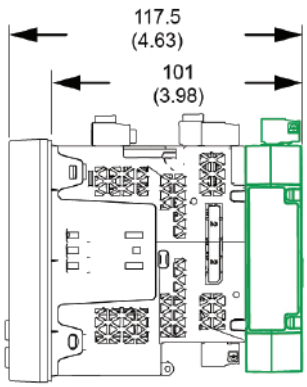

PB113677

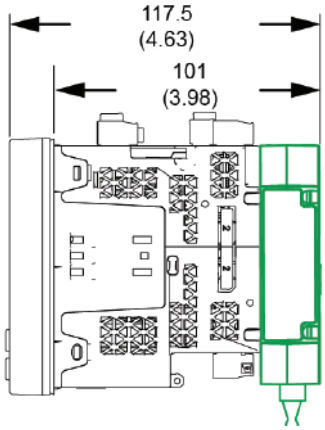

*For further details please see appropriate Schneider Electric **Installation Guide** for this product.*

PowerLogic™ ION8650 series

Providing high accuracy and a wide range of features for transmission and distribution metering, the PowerLogic™ ION8650 advanced revenue and power quality meter has the flexibility to change along with your needs. The meter provides the tools necessary to:

- Manage energy procurement and supply contracts
- Perform network capacity planning and stability analysis
- Monitor power quality compliance, supply agreements, and regulatory requirements

Applications

- Transmission and distribution metering
- Revenue metering
- Extensive power quality monitoring and analysis
- Power quality compliance monitoring
- Digital fault recording
- Instrument transformer correction

PB107500

ION8650

ION8650 series

The solution for

Markets that can benefit from a solution that includes PowerLogic™ ION8650 series meters:

- Transmission networks
- Distribution network

Benefits

- Reduce operations costs
- Improve power quality
- Improve continuity of service

Competitive advantages

- Be integrated into existing wholesale settlement system
- Be able to use Power Monitoring Expert software for data analysis or share operation data with SCADA systems through multiple communication channels and protocols
- Transformer/line loss compensation
- Instrument transformer correction

Power management solutions

Schneider Electric provides innovative power management solutions to increase your energy efficiency and cost savings, maximise electrical network reliability and availability, and optimise electrical asset performance.

Conformity of standards

- IEC 62053-22/23
- IEC 61000-4-30
- EN 50160
- IEC 61000-4-7
- IEC 61000-4-15
- IEEE 1159
- IEEE 519
- IEC 61000-4-2
- IEC 61000-4-3
- IEC 61000-4-4
- IEC 61000-4-5
- IEC 61000-4-6
- IEC 61000-4-12
- CISPR 22
- IEC 62052-11
- IEC 60950
- ANSI C12.20

ION8650 series

PB107500

PowerLogic™ ION8650 socket meter

Main characteristics

Used to monitor electric energy provider networks, service entrances and substations, PowerLogic™ ION8650 meters are ideal for independent power producers and cogeneration applications that need to accurately measure energy bi-directionally in both generation and stand-by modes. These meters give utilities the tools to manage complex energy supply contracts that include commitments to power quality. Integrate them with our EcoStruxure™ Power Monitoring operations software or other energy management and SCADA systems through multiple communication channels and protocols, including Itron MV-90, Modbus, DNP, DLMS, IEC 61850 Ed. 3.

Applications

- Revenue metering.
- Cogeneration and IPP monitoring.
- Compliance monitoring.
- Power quality analysis.
- Demand and power factor control.
- Load curtailment.
- Equipment monitoring and control.
- Energy pulsing and totalisation.
- Instrument transformer correction.
- Outage Notification

Main characteristics

- ANSI Class 0.1 and IEC 62053-22/23 Class 0.2 S metering
  - For interconnection points on medium, high, and ultra-high voltage networks; twice as accurate as current IEC and meets ANSI Class standards over all conditions and including single wide range current measurement.
- Power quality compliance monitoring
  - Monitor compliance with international quality-of-supply standards (IEC 61000-4-30 Ed. 3 Class A/S, EN 50160 Ed. 4, IEC 61000-4-7, IEC 61000-4-15, IEEE 1159, IEEE 519). Also detects disturbance direction.
- Digital fault recording
  - Simultaneous capture of voltage and current channels for sub-cycle disturbance.
- Complete communications
  - Multi-port, multi-protocol ports including serial, infrared, modem and ethernet. Simultaneously supports multiple industry standard protocols including: Itron MV-90, Modbus, Modbus Master, DLMS, DNP 3.0 and IEC 61850 Ed. 2. Cell modem option using LTE.
- Multiple tariffs and time-of-use
  - Apply tariffs, seasonal rate schedules to measure energy and demand values for time periods with specific billing requirements.
- Multiple setpoints for alarm and functions
  - Use up to 65 setpoints for single/multi-condition alarms and I/O functions with response times down to 1/2 cycle.
- Multiple setpoints for alarm and functions
  - Use up to 65 setpoints.
- Instrument transformer correction
  - Save money and improve accuracy by correcting for less accurate transformers.
- Alarm notification via email
  - High-priority alarms, data logs sent directly to the user's PC. Instant notification of power quality events by email.
- Cyber security enhancements
  - Assign communication admin rights to selected user; prevention measures ensure no loss of security logs; support syslog for external security.

Feature selection

Commercial reference number	ION8650 meters
M8650A	ION8650A
M8650B	ION8650B
M8650C	ION8650C

ION8650 series

PE86302-95

PowerLogic™ ION8650 switchboard meter.

1 *Terminals*
2 *Optical port*
3 *Main display status bar*
4 *Watt LED*
5 *Navigation, ALT/Enter buttons*
6 *VAR LED*
7 *Nameplate label*
8 *Demand reset switch*

PE86002

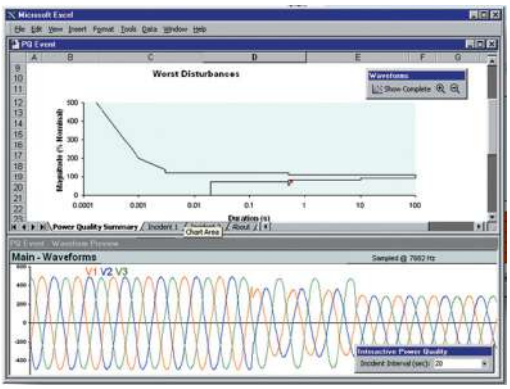

Disturbance waveform capture and power quality report

Selection guide

		ION8650 A	ION8650 B	ION8650 C
General				
Use on LV, MV and HV systems		■	■	■
Current accuracy		0.1 %	0.1 %	0.1 %
Voltage accuracy		0.1 %	0.1 %	0.1 %
Power accuracy		0.1 %	0.1 %	0.1 %
Samples/cycle		1024	1024	1024
Instantaneous values				
Current, voltage, frequency		■	■	■
Active, reactive, apparent power	Total & per phase	■	■	■
Power factor	Total & per phase	■	■	■
Current measurement range		0 A - 20 A	0 A - 20 A	0 A - 20 A
Energy values				
Active, reactive, apparent energy		■	■	■
Settable accumulation modes		■	■	■
Demand values				
Current	Present & max values	■	■	■
Active, reactive, apparent power	Present & max values	■	■	■
Predicted active, reactive, apparent power		■	■	■
Synchronisation of the measurement window		■	■	■
Demand modes: Block (sliding), thermal (exponential)		■	■	■
Power quality measurements				
Harmonic distortion	Current & voltage	■	■	■
Individual harmonics	Via front panel	63	63	31
Waveform / transient capture		■ / ■	- / ■	- / -
Harmonics: magnitude, phase, and interharmonics		50	40	-
Detection of voltage sags and swells		■	■	■
IEC 61000-4-30 class A / S		A	S	-
IEC 61000-4-15 (Flicker)		■	■	-
High speed data recording (down to 10 ms)		■	■	-
EN 50160 compliance reporting		■	■	-
Programmable (logic and math functions)		■	■	■
Data recording				
Onboard Memory (in Mbytes)		128	64	32
Revenue logs		■	■	■
Event logs		■	■	■
Historical logs		■	■	■
Harmonics logs		■	■	■
Sag/swell logs		■	■	■
Transient logs		■	-	-
Time stamping to 1 ms		■	■	■
GPS synchronisation (IRIG-B standard)		■	■	■
Display and I/O				
Front panel display		■	■	■
Wiring self-test (requires PowerLogic™ ION Setup)		■	■	■
Pulse output (front panel LED)		2	2	2
Digital or analog inputs* (max)		11	11	11
Digital or analog outputs* (max, including pulse output)		16	16	16
Communication				
Infrared port		1	1	1
RS-485 / RS-232 port		1	1	1***
RS-485 port		1	1	1***
Ethernet port (Modbus/TCP/IP protocol) with gateway		1	1	1***
Internal modem with gateway (ModemGate)		1	1	1***
HTML web page server		■	■	■
IRIG-B port (unmodulated IRIG B00x time format)		1	1	1
Modbus TCP Master / Slave (Ethernet port)		■ / ■	■ / ■	- / ■
Modbus RTU Master / Slave (Serial ports)		■ / ■	■ / ■	- / ■
DNP 3.0 through serial, modem, and I/R ports		■	■	■
Cell modem option (LTE)		■	■	■
DLMS COSEM through serial, Ethernet and optical ports for all variants		■	■	■

* *With optional I/O Expander.*
** *For 9S, and 36S only. For 35S system up to 480 V L-L.*
*** *C model limited to IR + 2 other ports at one time. Ports can be enabled/disabled by user.*

ION8650 series

PE86041

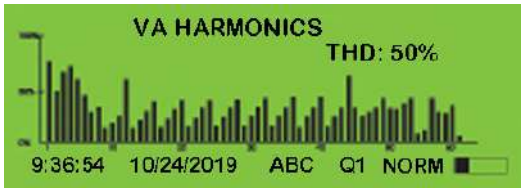

PowerLogic™ ION8650 front panel harmonic display

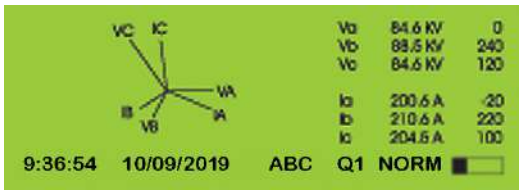

PowerLogic™ ION8650 front panel phasor display and table

Electrical characteristics		
Type of measurement		True rms 1024 samples per cycle
Measurement accuracy	Current and voltage	0.1 % Reading
	Power	0.1 %
	Frequency	±0.001 Hz
	Power factor	0.1 %
	Energy	0.1 %, twice as accurate as ANSI Class 0.2 and IEC 62053-22/23 (0,2S)
Data update rate		0.5 cycle or 1 second (depending on value)
Input-voltage characteristics*	Nominal voltage	57 V to 277 V L-N rms 100 V to 480 V L-L rms (35S)
	Maximum voltage	347 V L-N rms, 600 V L-L rms (9S)
	Impedance	5 MW /phase (phase-Vref/Ground)
	Inputs	V1, V2, V3, VREF
Input-current characteristics	Rated nominal/ current class	1A, 2 A, 5 A and/or 10 A (Class 1/2/10/20)
	Accuracy range	0.01 - 20 A (standard range)
	Measurement range	0.001 - 24 A
	Permissible overload	500 A rms for 1 second, non-recurring
	Burden per phase	Socket Current Class 2/10/20 Input-Current burden: 0.05VA per phase at 5 A (2 milliOhms max) Switchboard Current Class 2/10/20 Input-Current burden: 0.05VA per phase at 1 A (50 milliOhms max)
Power supply	Standard power supply, blade powered	120-277 V L-N RMS (-15 %/+20 %) 47-63 Hz or 120-480 V L-L RMS (-15 %/+20 %) 47-63 Hz (35S)
	Auxiliary powered low voltage	AC: 65-120 (+/- 15 %) VLN RMS, 47-63 Hz DC: 80-160 (+/- 20 %) VDC
	Auxiliary powered high voltage	AC: 160-277 (+/- 20 %) V L-N RMS, 47-63 Hz DC: 200-300 (+/- 20 %) V DC
	Ride-through time, (Standard power supply)	Socket: min guaranteed: 6 cycles at nominal frequency (minimum 50 Hz), at 120 V L-N rms (208 V L-L rms) 3-phase operation Switchboard: min guaranteed: 6 cycles at nominal frequency (minimum 50 Hz), at 120 V L-N rms (208 V L-L rms) 3-phase operation
	Burden	Standard Power Supply: Typical: 8 W total, 7 VA/phase Max: 15 W total, 20 VA/phase
		Auxiliary Power Supply: Typical: 7 W, 14 VA Max: 15 W, 20 VA
Input/outputs**	Digital outputs	4 (Form C) Solid state relays (130 V AC/ 200 V DC) 50 mA AC/ DC, 1 (Form A) output
	Digital inputs	up to 3 Self-excited, dry contact sensing inputs
Mechanical characteristics		
Weight		7.0 kg
IP degree of protection	Socket	Front IP65, back IP51
	Switchboard	Front IP50, back IP30
Dimensions	Socket	178 x 237 mm
	Switchboard	285 x 228 x 163 mm
Environmental conditions		
Operating temperature		-40 °C to 85 °C
Display operating range		-40 °C to 70 °C
Storage temperature		-40 °C to 85 °C
Humidity rating		5 % to 95 % RH non-condensing
Pollution degree		2
Installation category		Cat III
Dielectric withstand		2.5 kV
Electromagnetic compatibility		
Electrostatic discharge		IEC 61000-4-2
Immunity to radiated fields		IEC 61000-4-3
Immunity to fast transients		IEC 61000-4-4
Immunity to surge		IEC 61000-4-5
Immunity conducted		IEC 61000-4-6
Damped oscillatory waves immunity		IEC 61000-4-12
Conducted and radiated emissions		CISPR 22 (class B)
Safety		
Europe		As per IEC 62052-11
North America		As per ANSI C12.1

** Specifications are limited by the operating range of the power supply if a non-aux power supply is used.*

*** More input and output selections available via optional I/O expander.*

ION8650 series

PB117744

Example embedded webserver page (WebMeter) showing realtime values.

Communication	
RS-232 / RS-485 port (COM1)	User-selectable RS-232 or RS-485. 300 - 115,200 baud (RS-485 limited to 57,600 bps); protocols: ION, Modbus/RTU/Mastering, DLMS, DNP 3.0, GPSTRUETIME/DATUM.
Internal modem port (COM2)	300-57,600 bps
Cell modem option (CDMA/LTE)	CDMA2000 1xRTT / EV-DO Rev A (backwards compatible to EVDO Rev. 0 and CDMA 1x networks) 800/1900 MHz. MTSMC-LVW3 / LTE FDD Cat 1, 3GPP release 9 compliant, 4G: 1900 (B2) / 700 (B13) / AWS 1700 (B4)
ANSI 12.18 Type II optical port (COM3)	Up to 57,600 bps
RS-485 port (COM4)	Up to 57,600 baud, Modbus, direct connection to a PC or modem
Ethernet port	10/100BASE-T, RJ45 connector, protocols: DNP, ION, Modbus/TCP/Mastering, IEC 61850 Ed. 2 or 100BASE-FX multimode, male ST connectors, DLMS
EtherGate	Up to 31 slave devices via serial ports
ModemGate	Up to 31 slave devices
Firmware characteristics	
High-speed data recording	Up to 1/2-cycle interval burst recording, stores detailed characteristics of disturbances or outages. Trigger recording by a user-defined setpoint, or from external equipment.
Harmonic distortion	Up to 63rd harmonic for all voltage and current inputs
Dip/swell detection	Analyse severity/potential impact of sags and swells: – magnitude and duration data suitable for plotting on voltage tolerance curves – per phase triggers for waveform recording or control operations
Instantaneous	High accuracy measurements with 1s or 1/2 cycle update rate for: – voltage and current – active power (kW) and reactive power (kVAR) – apparent power (kVA) – power factor and frequency – voltage and current unbalance – phase reversal
Load profiling	Channel assignments are user configurable: – 800 channels via 50 data recorders (feature set A), – 720 channels via 45 data recorders (feature set B), – 80 channels via 5 data recorders (feature set C). Configure for historical trend recording of energy, demand, voltage, current, power quality, other measured parameters. Recorders can trigger on time interval basis, calendar schedule, alarm/event condition, manually.
Waveform captures	Simultaneous capture of all voltage and current channels – sub-cycle disturbance capture (16 to 1024 samples/cycle)
Alarms	Threshold alarms: – adjustable pickup and dropout setpoints and time delays, numerous activation levels possible for a given type of alarm – user-defined priority levels – boolean combination of alarms
Advanced security	Up to 50 users with unique access rights. Perform resets, time syncs, or meter configurations based on user privileges.
Transformer correction	Correct for phase / magnitude inaccuracies in current transformers (CTs), potential transformers (PTs)
Memory	128 MB (A), 64 MB (B), 32 MB (C)
Firmware update	Update via the communication ports
Display characteristics	
Type	FSTN transreflective LCD
Backlight	LED
Languages	English

ION8650 series

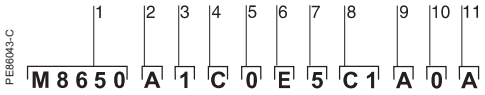

Example product part number.

1 *Model.*
2 *Feature set.*
3 *Form factor.*
4 *Current Inputs.*
5 *Voltage inputs.*
6 *Power supply.*
7 *System frequency.*
8 *Communications.*
9 *Input/output options.*
10 *Security.*
11 *Special order options.*

PowerLogic™ ION8650 meter with switchboard case

Commercial reference numbers

Item		Code	Description
1	Model	M8650	Schneider Electric energy and power quality meter.
2	Feature Set	A	128 MB Memory Class A power quality analysis, waveforms and transient capture with 1024 samples/cycle.
		B	64 MB memory, energy meter Class S EN 50160 Ed. 4 power quality monitoring.
		C	32 MB memory, basic tariff/energy metering (5 data recorders, 80 channels).
3	Form Factor (1)	0	Form 9S/29S/36S Base, 57-277 V L-N (auto ranging) 3-Element, 4-Wire / 2 1/2-Element, 4-Wire
		1	Form 35S Base - 120-480 V L-L (auto ranging) 2-Element, 3-Wire
		4	Form 9/29/35/36S FT21 Switchboard (meter + case) with break out panel
		7	Form 9/29/35/36S FT21 Switchboard (meter + case) with break out cable
4	Current Inputs	C	1, 2 or 5 A nominal, 20 A full scale (24 A fault capture, start at 0.001 A)
5	Voltage Inputs	0	Standard (see Form Factor above)
6	Power Supply*	E	Form 9/29/35/36S, (socket) and Form 9, 36 (FT21 switchboard): 120-277 V AC. Form 35S (socket) and Form 35 (FT21 switchboard): 120-480 V AC. Powered from the meter's voltage connections.
		H	Auxiliary Power Pigtail: 65-120 V AC or 80-160 V DC (power from external source)
		J	Auxiliary Power Pigtail: 160-277 V AC or 200-300 V DC (power from external source)
		K	Auxiliary Power Pigtail: 65-120 V AC, 80-160 V DC (power from external source), Universal Socket Style
		L	Auxiliary Power Pigtail: 160-277 V AC, 200-350 V DC (power from external source), Universal Socket Style
7	System Frequency	5	Calibrated for 50 Hz systems.
		6	Calibrated for 60 Hz systems.
8	Communications	C 7	Infrared optical port, Ethernet (10/100BASE-T), RS-232/485 port, RS-485 port (note: in addition to infrared optical port, Feature Set C can use any two ports (configurable)), 56 k universal internal modem (RJ11)
		E 1	Infrared optical port, Ethernet (10/100BASE-T), RS 232/485 port, RS-485 port (note: in addition to infrared optical port, Feature Set C can use any two ports (configurable))
		F 1	Infrared Optical port, Ethernet (100BASE-FX multi-mode) with male ST connectors (available on socket meters only, Forms 0 & 1 above. I/O card not available if this option is ordered.) RS-232/485 port, RS-485 port (Note: in addition to Infrared Optical port Feature Set C can use any two ports (configurable))
		S 1	Infrared optical port, Ethernet (10 BASE-T), RS-232/485 port, RS-485 port (note: in addition to infrared optical port, Feature Set C can use any two ports (configurable)), Verizon 4G LTE cell modem.
9	Onboard I/O	A	None.
		B	4 Form C digital outputs, 3 Form A digital inputs.
		C	4 Form C digital outputs, 1 Form A digital output, 1 digital input.
10	Security	0	Password protected no security lock.
		1	Password protected with security lock enabled
		3	RMICAN (Measurement Canada approved)
		4	RMICAN-SEAL (Measurement Canada approved, and factory sealed)
		7	Password protected, no security lock (US only)
		8	Password protected with security lock enabled (US only)
11	Special Order	A	None

**Specifications are limited by the operating range of the power supply if a non-aux power supply is used.*

ION8650 series

PE86044_1

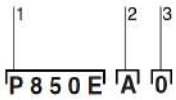

Example order code. Use this group of codes when ordering the I/O Expander.

1 *Digital / Analog I/O.*
2 *I/O option.*
3 *Cable option.*

PE86131

Commercial reference numbers (cont.)

I/O Expander		
Digital/Analog I/O	P850E	Schneider Electric I/O Expander for ION8600 meters: Inputs and Outputs for energy pulsing, control, energy counting, status monitoring, and analog interface to SCADA.
I/O option	A	External I/O box with 8 digital inputs and 8 digital outputs (4 Form A, 4 Form C)
	B	External I/O box with 8 digital inputs and 4 digital outputs (4 Form C) and 4 analog outputs (0 to 20 mA)
	C	External I/O box with 8 digital inputs and 4 digital outputs (4 Form C) and 4 analog outputs (-1 mA to 1 mA)
	D	External I/O box with 8 digital inputs and 4 digital outputs (4 Form C) and 4 analog outputs (two -1 to 1 mA, and two 0 to 20 mA outputs)
Cable	0	No cable - cables for the I/O box are no ordered as a separate part number. Refer to commercial reference numbers: CBL-8X00IOE5FT, CBL-8X00IOE15FT and CBL-8XX0-BOP-IOBOX under Connector cables, below.
Comm. ref. no.	A-base adapters	
A-BASE-ADAPTER-9	Form 9S to Form 9A adapter	
A-BASE-ADAPTER-35	Form 35S to Form 35A adapter	
	Optical communication interface	
OPTICAL-PROBE	Optical communication interface	
	Connector cables	
CBL-8X00BRKOUT	5 ft Breakout Cable: 24-pin female Molex connector to one DB9 female connector for RS 232, and 2 sets of twisted pair wires for two RS 485 port connections	
CBL-8X00IOE5FT	5 ft extension cable, mates with 24-pin male Molex connector from the meter to the 24-pin Molex connector on the I/O Expander box	
CBL-8X00IOE15FT	15 ft extension cable, mates with 24-pin male Molex connector from the meter to the 24-pin female Molex connector on the I/O Expander box	
CBL-8XX0-BOP-IOBOX	1.8 m connector cable, 24-pin male to 14-pin male Molex connector for connecting an ION8000 Series meter with breakout panel to an I/O Expander Box	

ION8650 series

ION8650 socket dimensions

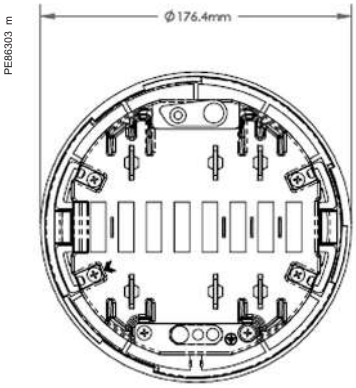

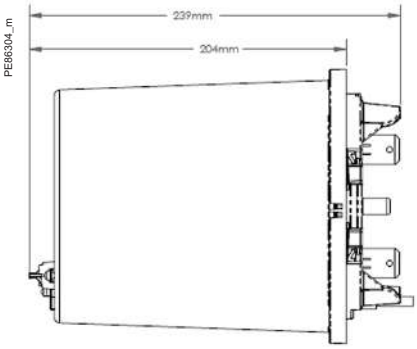

ION8650 switchboard dimensions

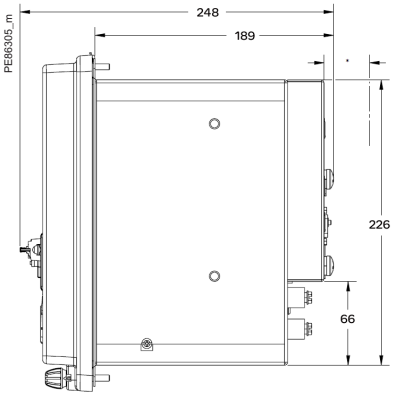

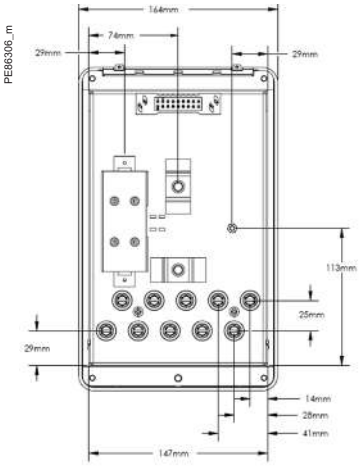

I/O Expander dimensions

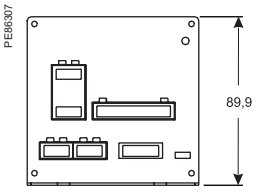

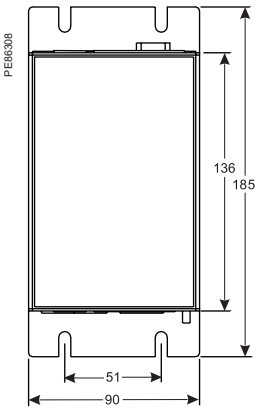

ION8650 series

ION8650 suggested switchboard mounting dimensions

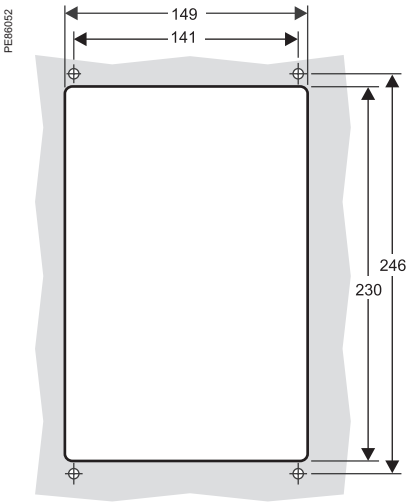

ION8650 switchboard mounting

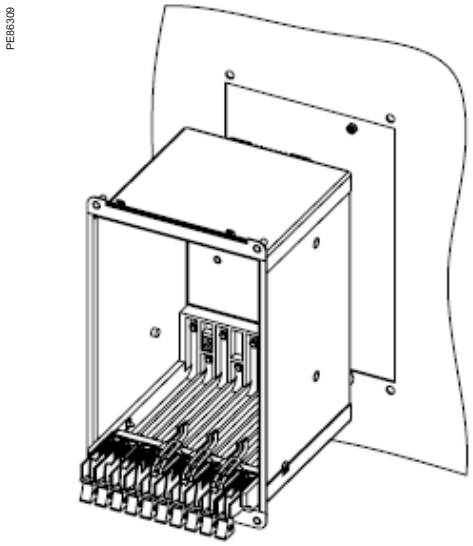

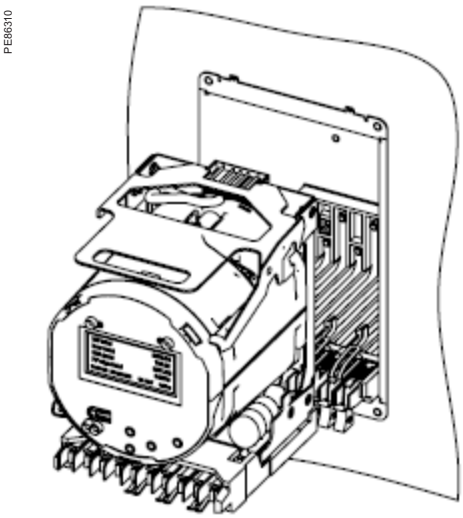

*Please see appropriate **Installation Guide** for these products for further details.*

Multi-circuit Metering

This is an integrated solution for monitoring multi-circuits and mains by using a single meter. The meter is designed for use in both new build and retrofit and is used for critical power operations in data centres and energy management in buildings.

The ideal solution for data centre managers, energy or facility managers, engineers and operational executives who are responsible for delivering power to critical applications.

In corporate and hosted data centre facilities, this technology helps you plan and optimise the critical power infrastructure to meet the demands of continuous availability.

- PowerLogic™ HDPM6000
- PowerLogic™ BCPM
- EM4000 series
- EM4800 series
- EM4900 series

PB113664

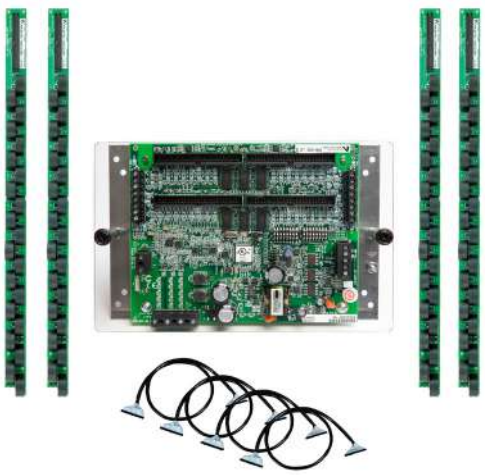

PE86325

PB124374

PowerLogic™ HDPM6000

The PowerLogic™ HDPM6000 sets a new standard for Power Quality Meters as both a standalone three-phase PQM and the foundation for an entire suite of devices: HDPM6000R, HDPM6000S, and HDPM6000B

The HDPM6000 is both a standalone 3-phase power quality meter (PQM) and the hub for Schneider Electric's branch circuit accessory modules (HDPM6000R, HDPM6000S, HDPM6000B). It can monitor loads up to 4000 A with utility grade system accuracy, delivers a complete range of power quality metrics (vTHD, iTHD), and provides waveform capture functionality without the need for additional proprietary software. The HDPM6000 can also maintain multiple, concurrent sessions with EPMS, DCIM or BMS applications via the Modbus, SNMP and BACnet IP protocols. Dual Ethernet ports allow multiple HDPM6000 head units to be daisy-chained in a single run.

Thanks to open protocols, the HDPM6000 is easily integrated into any data center or building management information system. Gateways or additional hardware are not required and the platform offers most standard forms of data connectivity. The on-board environmental communications port enables one-wire sensors to detect abnormal temperature and humidity conditions so adjustments can be made before problems occur.

Applications

Ideal for large building applications such as data centers, industrial facilities, infrastructure and other similar environments.

PB124374

HDPM6000

Market solutions

Markets that benefit from a solution with PowerLogic™ HDPM6000 include:

- Data centers
- Industrial facilities
- Healthcare facilities
- Manufacturing

Benefits

- Modular platform approach provides scalability and minimizes integration costs, start up time and operational expenses.
- Provides power quality metrics down to the branch circuit allowing users to effectively monitor circuit loads, manage power consumption, allocate energy costs and maximize uptime across their facilities.
- Makes energy and power quality data immediately actionable and relevant to operational and sustainability goals

Competitive advantages

- Asset management
  - Identify increased harmonics in the rack servers to detect a potential disruption
  - Total Harmonics Distortion
  - Waveform capture
- Display and web page visualization
  - Optional touchscreen display accesses meter data
  - User-friendly web interface allows configuration of branch circuits and commissioning of meter system
- Data logging and software monitoring
  - Data logging and on-board memory storage
  - EcoStruxure™ PME and Power Operation integration
- Busway solution
  - Modular, distributed architecture meets data center requirements in an all-in-one solution

Power management solutions

Schneider Electric provides innovative power management solutions to increase your energy efficiency and cost savings. Maximize electrical network reliability and availability, and optimize electrical asset performance.

HDPM6000

HDPM6000 Head Unit

Measurements

- Accumulated Real Energy (kWh) per phase and total of all phases
- Accumulated Reactive Energy (kVARh) per phase and totals for all phases
- Accumulated Apparent Energy (kVAh) per phase and total of all phases
- Real (kW), Reactive (kVAR) and Apparent (kVA) Power Demand, per phase and total of all phases
- Instantaneous Real (kW), Reactive (kVAR) and Apparent Power (kVA), by phase and in total
- Current (amps) per phase and total of all phases
- Phase-to-phase voltage per phase and average of all phase pairs
- Phase-to-neutral voltage per phase and average of all phases
- Power factor per phase and average of all phases
- Frequency
- Voltage and current waveform capture
- Voltage and current harmonics
- Voltage and Current THD
- Total Demand Distortion (TDD)
- Voltage and current imbalance

Features guide

Web interface	For configuration and live data access
Supported protocols	Modbus TCP/IP, SNMP, BACnet IP
Data storage	Min. 8 GB SD card to store log data and waveform captures provided
Alarms	On-board user-configurable alarms and alerts
Power quality analytics	Waveform capture, voltage and current THD, voltage and current imbalance, TDD

Technical specifications

Electrical Characteristics	
Input reference voltage	[120] [208] [380] [400] [415] [480] VAC, single phase 2-wire plus ground, 3-wire plus ground or 4-wire plus ground
Input frequencies	50/60 Hz
24 VDC power supplies input voltage	100 to 240 VAC or 264 to 575 VAC to 24 VDC output
Measurement category	3
CT support	UL 2808, 20 to 4000 A with internal burdened resister and 250 mV signal (no shorting blocks required)
CT options	Solid-core or split-core type current transformers with a maximum voltage of 480 V.
Environmental Characteristics	
Operating temperature	-20 to 60 °C (-68 to 140 °F)
Storage temperature	-40 to 85 °C (-40 to 185 °F)
Relative humidity	5 to 90% non-condensing
Maximum operating altitude	2,000 m (6,562 ft.)
Non-operating altitude	15,000 m (49,213 ft.)
Noise level	< 65 dba at six ft. (72 in.) from the HDPM6000
Mounting location	Not suitable for wet locations. For indoor use only.
Pollution degree	2

HDPM6000

Technical specifications (cont.)

Standards		
Description	**General Standard**	**Reference Standard**
Radiated emissions	IEC/EN 61326-1 :2020 (Industrial Electro-magnetic Environment)	CISPR 11: Conducted emissions, AC port inc A1
Conducted emissions, AC port		
Conducted emissions, telecom port		
Radiated RF immunity		IEC/EN 61000-4-3
Fast transient bursts		IEC/EN 61000-4-4*
Surge		IEC/EN 61000-4-5
Conducted immunity		IEC/EN 61000-4-6
Power frequency magnetic field		IEC/EN 61000-4-8
Voltage dips and interruptions		IEC/EN 61000-4-11

**The device may experience measurement accuracy deviation. Contact Schneider Electric technical support for more information.*

HDPM6000 Dimensions

Top view

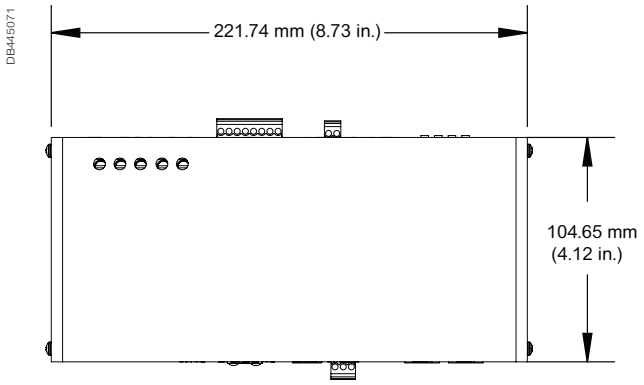

Bottom view

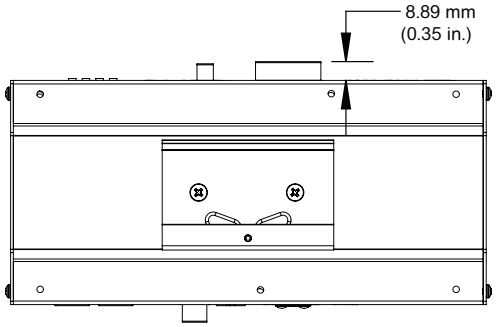

Left view

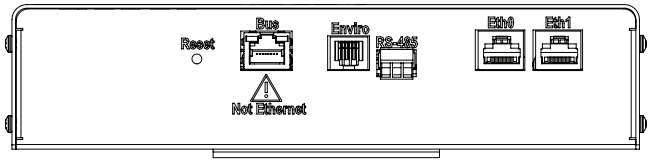

Front view

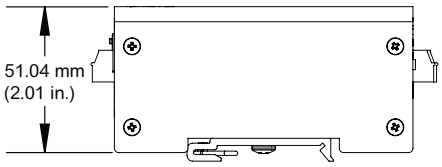

Right view

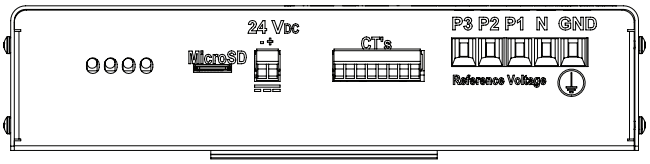

Back view

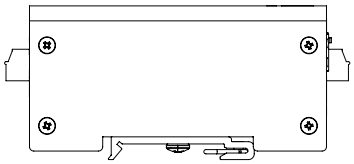

Note: Dimensions shown are within ±3.175 mm (±0.125 in.).

HDPM6000B

PB124376

HDPM6000B busway meter

Metering Architecture

Measurements

- Current per branch and sum of all phases
- Energy (kWh) per branch and sum of all phases
- Real Power (kW) per branch and sum of all phases
- Apparent Power (kVA) per branch and sum of all phases
- Reactive Power (kVAR) per branch and sum of all phases
- Real Power (kW) demand per circuit
- Current waveform capture
- Current THD
- Power factor (sign indicates leading or lagging current), per branch and average of all phases for multi-phase circuits

Features guide

Web interface	For configuration and live data access
Supported protocols	Modbus TCP/IP, SNMP, BACnet
Data storage	Min. 8 GB SD card to store log data and waveform captures provided
Alarms	On-board user-configurable alarms and alerts
Input	One-wire temperature and humidity sensor input
Display	Seven-segment display of address or serial number
Power quality analytics	Waveform capture and current THD

Technical specifications

Electrical Characteristics	
Supply voltage	24 VDC supplied from the HDPM6000 via bus port CAT6 cable
CT support	UL 2808, 20-4000 A with internal burdened resister and 250 mV signal (no shorting blocks required)
CT options	Solid-core or split-core type current transformers with a maximum voltage of 480 V.
Bus cabling	CAT6, maximum of 51.2 m (168 ft.) total cable length
Environmental Characteristics	
Operating temperature	-20 to 60 °C (-68 to 140 °F)
Storage temperature	-40 to 85 °C (-40 to 185 °F)
Relative humidity	5 to 90% non-condensing
Maximum operating altitude	2,000 m (6562 ft.)
Non-operating altitude	15,000 m (49213 ft.)
Noise level	< 65 dba at six ft. (72 in.) from the HDPM6000
Mounting location	Not suitable for wet locations. For indoor use only.

Standards

Description	General Standard	Reference Standard
Radiated emissions	IEC/EN 61326-1 :2020 (Industrial Electromagnetic Environment)	CISPR 11 AC port inc A1
Conducted emissions, AC port (1)		
Conducted emissions, telecom port		
Radiated RF immunity		IEC/EN 61000-4-3
Fast transient bursts		IEC/EN 61000-4-4*
Conducted immunity		IEC/EN 61000-4-6
Power frequency magnetic field		IEC/EN 61000-4-8
Voltage dips and interruptions		IEC/EN 61000-4-11

**The device may experience measurement accuracy deviation. Contact Schneider Electric technical support for more information.*

HDPM6000B Dimensions

Top view

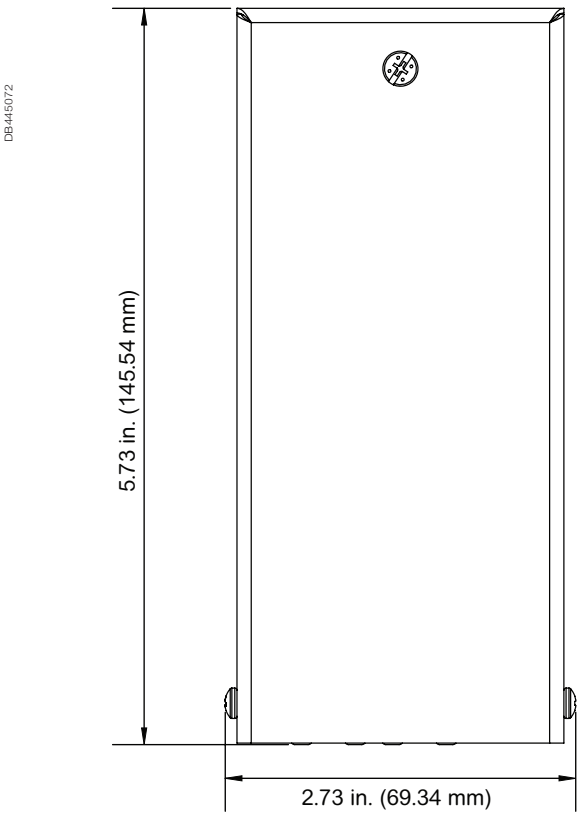

Side view

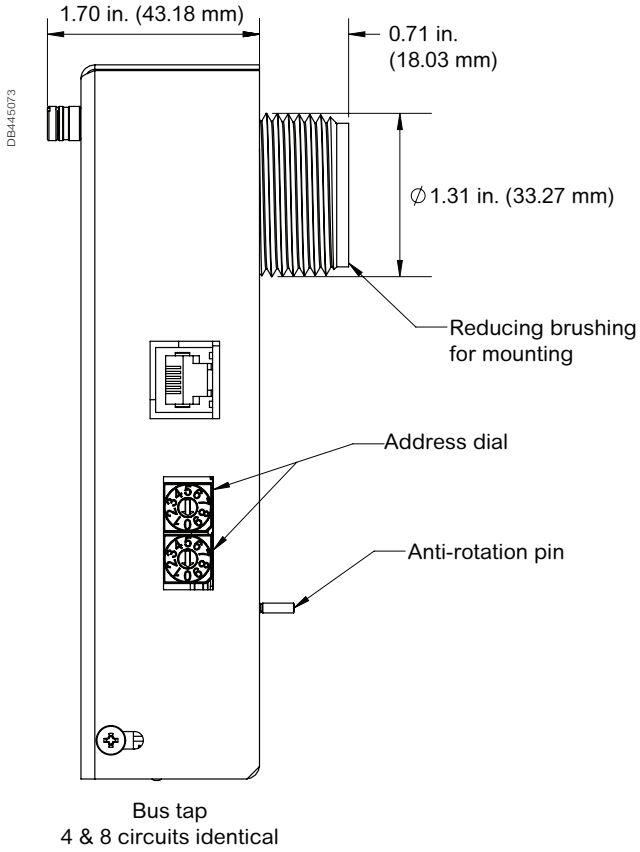

Front view

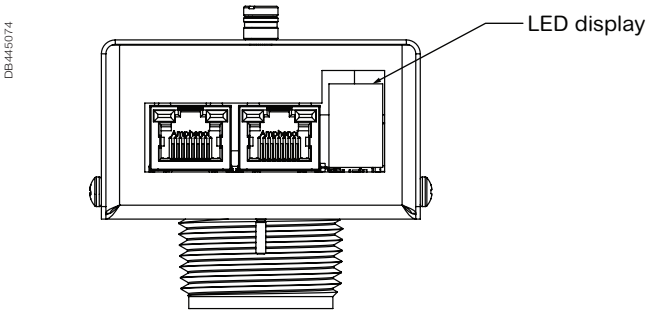

HDPM6000R

PB124377

HDPM6000R Retrofit Module

Metering Architecture

Measurements

- Current per branch and sum of all phases
- Energy (kWh) per branch and sum of all phases
- Real Power (kW) per branch and sum of all phases
- Apparent Power (kVA) per branch and sum of all phases
- Reactive Power (kVAR) per branch and sum of all phases
- Real Power (kW) demand per circuit
- Total Harmonic Distortion (THD)
- Current waveform capture (optional)
- Power factor (sign indicates leading or lagging current), per branch and average of all phases for multi-phase circuits

Features guide

Web interface	For configuration and live data access
Supported protocols	Modbus TCP/IP, SNMP, BACnet
Data storage	Min. 8 GB SD card to store log data and waveform captures provided
Alarms	Onboard user-configurable alarms and alerts
Power quality analytics	Waveform capture and current THD

Technical specifications

Electrical characteristics	
CT support	UL 2808, 20-4000 A with internal burdened resister and 250 mV signal (no shorting blocks required)
CT options	Solid-core or split-core type current transformers with a maximum voltage of 480 V.
Environmental characteristics	
Operating temperature	-20 to 60 °C
Storage temperature	-40 to 85 °C
Relative humidity	5 to 90% non-condensing
Maximum operating altitude	2,000 m
Non-operating altitude	15,000 m
Noise level	< 65 dba at six feet from the PQM
Mounting location	Not suitable for wet locations. For indoor use only.

Note: For detailed electrical specifications on measurement voltage and power supply input voltage, refer to the HDPM6000 Technical Datasheet.

HDPM6000R Dimensions

24-Circuit

Top view

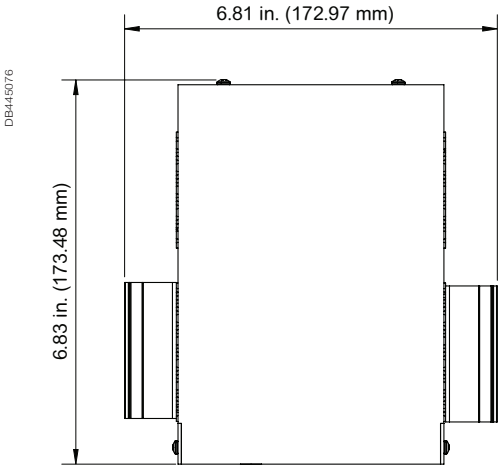

Side view

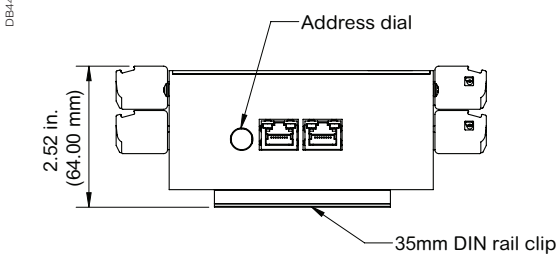

42-Circuit

Top view

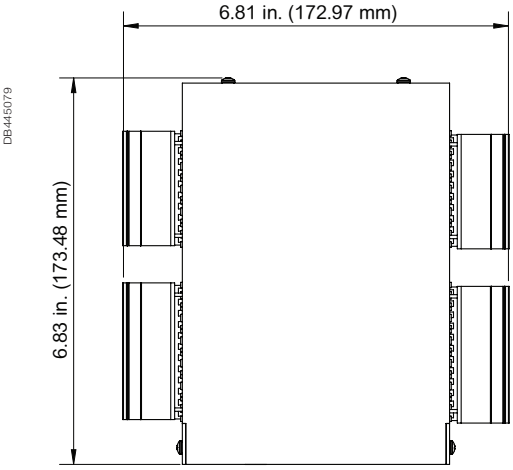

Side view

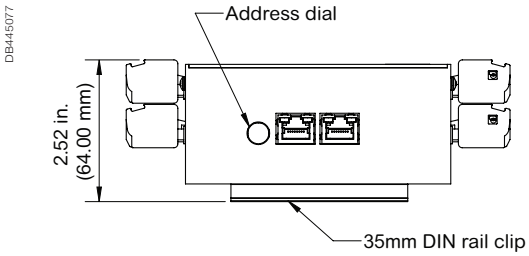

84-Circuit

Top view

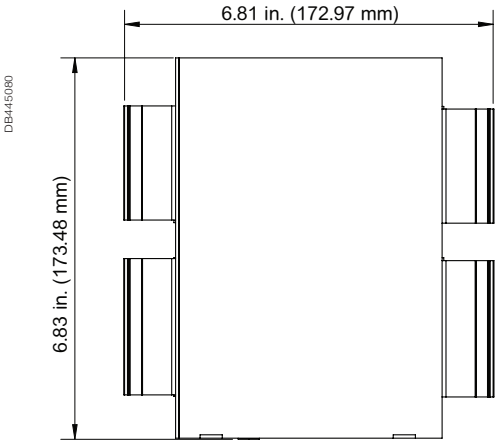

Side view

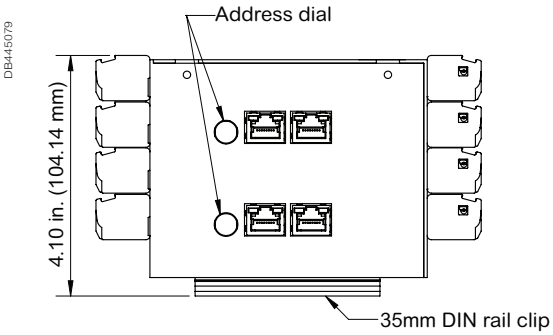

HDPM6000S

PB124378

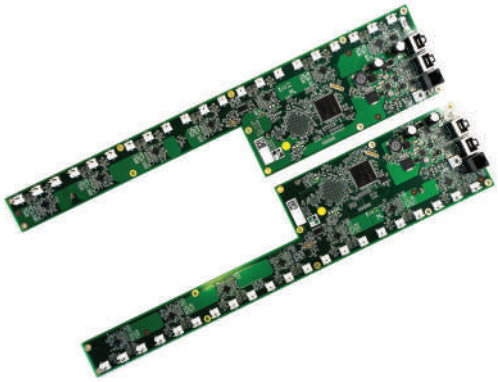

HDPM6000S Strip Module

PB124379

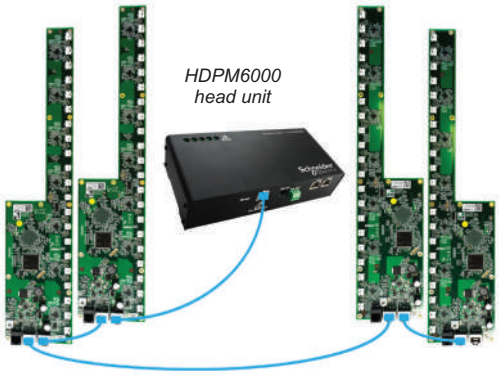

Metering Architecture

Measurements

- Current per branch and sum of all phases
- Energy (kWh) per branch and sum of all phases
- Real Power (kW) per branch and sum of all phases
- Apparent Power (kVA) per branch and sum of all phases
- Reactive Power (kVAR) per branch and sum of all phases
- Real Power (kW) demand per circuit
- Current waveform capture (optional)
- Total Harmonic Distortion (THD)
- Power factor (sign indicates leading or lagging current), per branch and average of all phases for multi-phase circuits

Features guide

Power quality analytics	Waveform capture and voltage and current THD
Web interface	For configuration and live data access
Supported protocols	Modbus TCP/IP, SNMP, BACnet
Data storage	Min. 8 GB SD card to store log data and waveform captures provided
Alarms	On-board user-configurable alarms and alerts

Technical specifications

Electrical Characteristics		
Supply voltage	24 VDC supplied from the HDPM6000 head unit via bus port CAT6 cable	
CT support	UL 2808, 20-4000 A with internal burdened resister and 250 mV signal (no shorting blocks required)	
CT options	Solid-core or split-core type current transformers with a maximum voltage of 480 V.	
Environmental Characteristics		
Operating temperature	-20 to 60 °C (-68 to 140 °F)	
Storage temperature	-40 to 85 °C (-40 to 185 °F)	
Relative humidity	5 to 90% non-condensing	
Max. operating altitude	2,000 m (6562 ft.)	
Non-operating altitude	15,000 m (49213 ft.)	
Noise level	< 65 dba at six ft. (72 in.) from the HDPM6000	
Mounting location	Not suitable for wet locations. For indoor use only.	
Standards		
Description	**General Standard**	**Reference Standard**
Radiated emissions	IEC/EN 61326-1 :2020 (Industrial Electromagnetic Environment)	CISPR 11 AC port inc A1
Conducted emissions, AC port		
Conducted emissions, telecom port		
Electrostatic discharge		IEC/EN 61000-4-2
Radiated RF immunity		IEC/EN 61000-4-3
Fast transient bursts		IEC/EN 61000-4-4
Conducted immunity		IEC/EN 61000-4-6
Power frequency magnetic field		IEC/EN 61000-4-8
Voltage dips and interruptions		IEC/EN 61000-4-11

HDPM6000S Dimensions

Left strip - top and side views

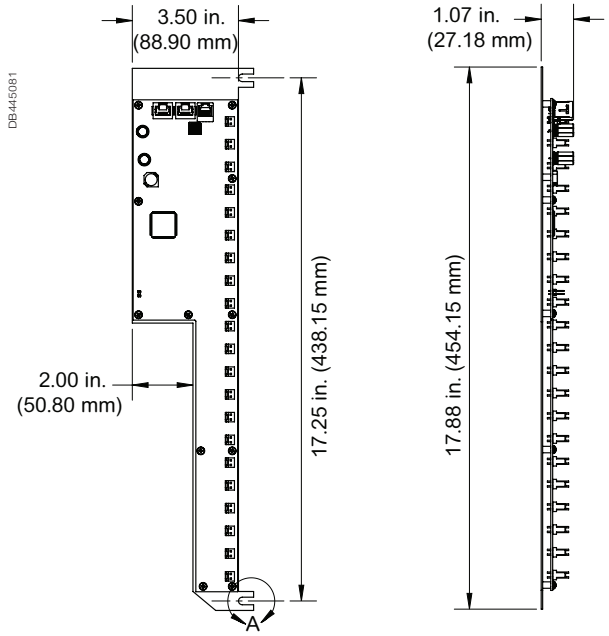

Right strip - top and side views

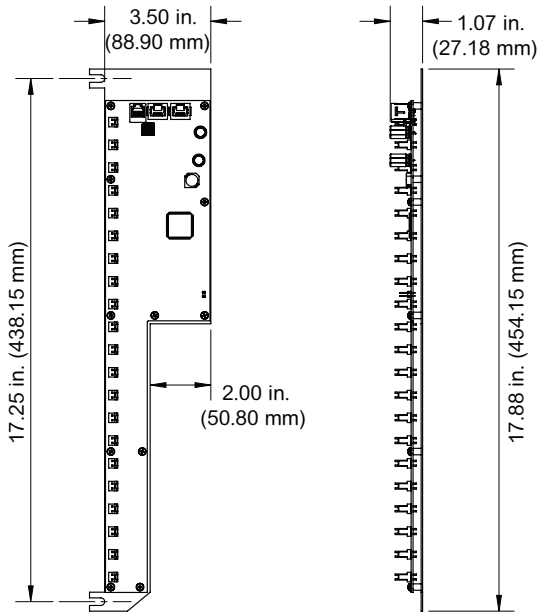

Detail A view, same for all lugs

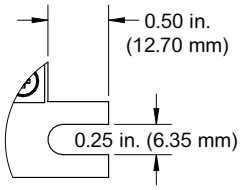

HDPM6000 I/O Module

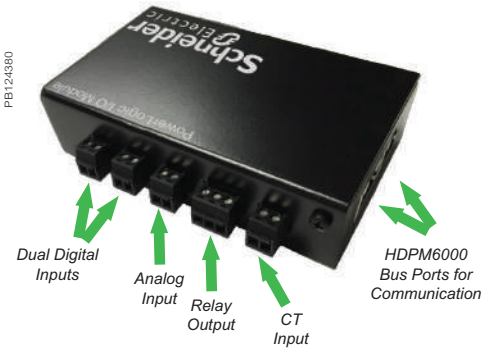

HDPM6000 I/O Module

Inputs & Outputs

- Digital Input 1: Dry contact to monitor accessory equipment
- Digital Input 2: Dry contact to monitor accessory equipment
- Analog Input 1: 0 to 10 VDC sensor input
- Relay Output: Form-C (NO, NC, Common)
- Current Transformer Input: 0 to 250 mVac (CT output)
- HDPM6000 Bus Ports: Two RJ-45 ports for daisy chaining and connection to the HDPM6000 head unit

Technical specifications

Electrical Characteristics		
Supply voltage	24 VDC supplied from the HDPM6000 head unit via bus port CAT6 cable	
Relay Output, Form C contact	30 VDC @ 1 A 48 VAC @ 0.5 A	
Digital inputs	5 VDC, 11 mA max supplied across dry contact input. Dry contact impedance maximum 50 ohms.	
Analog input	0 to 10 VDC, 0.05V accuracy, 0.01 V resolution	
Power supply	For the HDPM6000 head unit, use power supply module specified in HDPM6000 literature. Use <3 m power supply cable. Use <30 m shielded cable.	
Current Transformer (CT) input	0 to 250mV rms signal (no shorting blocks required)	
CT options	UL 2808, solid-core or split-core type current transformers	
Environmental Characteristics		
Operating temperature	-20 to 60 °C (-68 to 140 °F)	
Storage temperature	-20 to 70 °C (-68 to 158 °F)	
Relative humidity	5 to 90% non-condensing	
Maximum operating altitude	2,000 m (6562 ft.)	
Non-operating altitude	15,000 m (49213 ft.)	
Noise level	< 65 dba at six ft. (72 in.) from the HDPM6000	
Mounting location	Not suitable for wet locations. For indoor use only.	
Standards		
Description	**General Standard**	**Reference Standard**
Radiated emissions	IEC/EN 61326-1:2020 (Industrial Electromagnetic Environment)	CISPR 11 AC port inc A1
Conducted emissions, AC port		
Conducted emissions, telecom port		
Radiated RF immunity		IEC/EN 61000-4-3
Fast transient bursts		IEC/EN 61000-4-4
Surge		IEC/EN 61000-4-5
Conducted immunity		IEC/EN 61000-4-6
Power frequency magnetic field		IEC/EN 61000-4-8
Voltage dips and interruptions		IEC/EN 61000-4-11

Note: For detailed electrical specifications on measurement voltage and power supply input voltage, refer to the HDPM6000 Technical Datasheet.

HDPM6000 I/O Module Dimensions

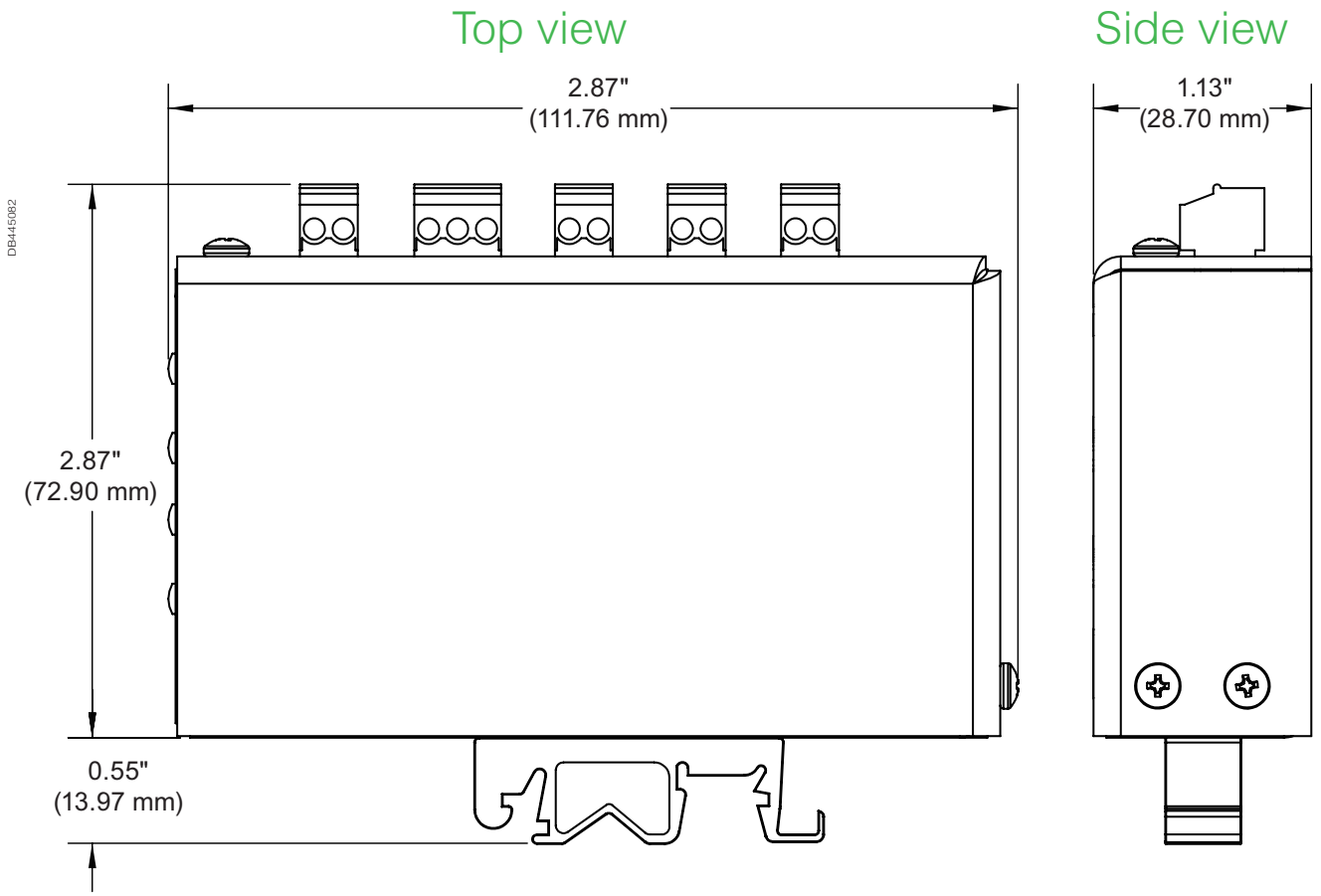

Commercial Reference Numbers

A complete list of HPDM commercial reference numbers appears in the Commercial Reference Numbers section of the PowerLogic™ Catalog. Contact your Schneider Electric representative for complete ordering information.

PowerLogic™ BCPM

The PowerLogic™ BCPM is a highly accurate, full-featured metering product designed for the unique, multi-circuit and minimal space requirements of a high performance power distribution unit (PDU) or remote power panel (RPP).

It offers class 1 (1 %) power and energy system accuracy (including 50 A or 100 A CTs) on all branch channels. The BCPM monitors up to 84 branch circuits and the incoming power mains to provide information on a complete PDU. Full alarming capabilities ensure that potential issues are dealt with before they become problems.

Applications

- Maximise uptime and avoid outages
- Optimise existing infrastructure
- Improve power distribution efficiency
- Track usage and allocate energy costs
- Enable accurate sub-metering

PB113665

BCPMA084S

The solution for

Markets that can benefit from a solution that includes PowerLogic™ BCPM series meters:

- Data centres
- Buildings

Benefits

The flexible BCPM fits any PDU or RPP design and supports both new and retrofit installations. It has exceptional dynamic range and accuracy, and optional feature sets to meet the energy challenges of mission critical data centres.

Competitive advantages

- Fit any PDU or RPP design for both new and retrofit projects
- Class 1.0 system accuracy
- Ethernet communication

Power management solutions

Schneider Electric provides innovative power management solutions to increase your energy efficiency and cost savings, maximise electrical network reliability and availability, and optimise electrical asset performance.

Conformity of standards

- ANSI C12.1
- IEC 61010-1
- IEC 62053-21 Class 1
- UL508

BCPM

PE86281

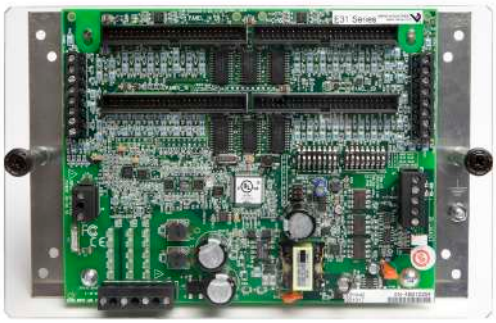

PB113664

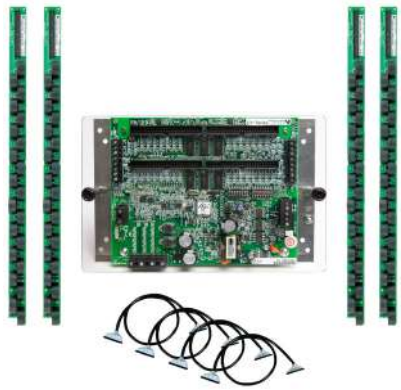

PB113645

PB113646

PB113647

PB113649

PB113648

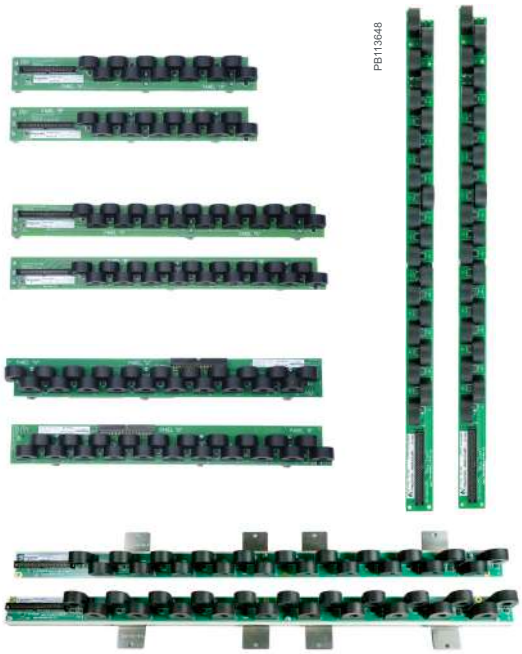

Main characteristics

- Monitor up to 84 branch circuits with a single BCPM.
- Ideal for installation in both new PDUs and retrofit projects
- New installations:
  - BCPM with solid core CTs monitors up to 84 branch circuits using 2 or 4 CT strips. Solid core CTs are rated to 100 A CTs and are mounted on strips to simplify installation. CT strips are available with 12, 18 or 21 CTs per strip on 18 mm spacings. 21 CT strips with 3/4in or 1in spacings are also available.
- Retrofit projects:
  - BCPMSC with split-core CTs is ideal for retrofits. Any number of split-core CTs, up to 84 maximum, can be installed with a single BCPM. Three sizes of CT are supported (50 A, 100 A, and 200 A) and all three CT sizes can be used on a single BCPM. Adapter boards with terminals for split-core CTs can be mounted using DIN-rail, Snaptrack or on a common mounting plate with the main board (42 ch Y63 models only).
- IEC Class 1 metering accuracy
  - Accurately monitor very low current levels, down to a quarter-Amp.
  - Easily differentiate between the flow of low current and a trip where no current flows.
- Class 1.0 system accuracy for Revenue Grade measurements
  - Branch Power and Energy measurements fully meet ANSI and IEC class 1 accuracy requirements with 50 or 100 A CTs included. No need to de-rate meter branch accuracy to allow for CTs. Voltage and current measurement accuracy is 0.5 % and currents are measured down to 50mA. Easily differentiate between the flow of low current and a trip where no current flows.
    Class 1.0 system accuracy for Revenue Grade measurements
  - Branch Power and Energy measurements fully meet ANSI and IEC class 1 accuracy require
- Power quality: obtain basic power quality data thanks to the measurement of Total Harmonic Distortion percentages on voltages and current. (V L-L, V L-N, I L-N).
- Designed to fit any PDU or RPP design
  - Lowers your total installation costs as well as the cost per meter point by supporting both new and retrofit installations.
- Communicates with your various systems: BCPMA, and BCPMSCA have a Modbus RTU connection BCPME, and BCPMSCE, have a serial connection for either Modbus RTU or BACnet MS/TP. And there is an ethernet connection for Modbus TCP, BACnet IP and SNMP at the same time. Allowing the concurrent use of an Energy Management System, a Building Management System and an IT system.
- Compatible with PowerLogic™ power monitoring software
  - Easily turn the large amount of data collected by the devices into useful decision-making information.
- Flexible Configuration capability
  - Set the ordering and orientation of CT strips, assign individual CT size and phases, support for 1, 2, and 3-pole breakers in any configuration.

BCPM

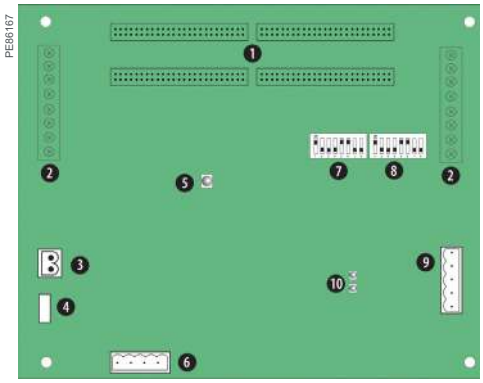

PowerLogic™ BCPM
1 50-pin ribbon cable connectors (data acquisition board).
2 Auxiliary inputs.
3 Control (mains) power connection.
4 Control power fuse.
5 Alive LED.
6 Voltage taps.
7 Communications address DIP switches.
8 Communications settings DIP switch.
9 RS-485 2 connection.
10 RS-485 LEDs.

Feature selection

General		BCPMA	BCPME
Use on LV systems		■	■
Power and energy measurements			
Mains		■	■
Branch circuits		■	■
Instantaneous rms values			
Voltage, frequency		■	■
Current		■	■
Active power	Total and per phase	■	■
Power factor	Total and per phase	■	■
Energy values			
Active energy		■	■
Demand values			
Total active power	Present and max. values	■	■
Power quality measurements			
THD % (V L-L, V L-N, I L-N)		■	■
Detection of over-voltage/under-voltage		■	■
Sampling rate points per cycle		2560 Hz	2560 Hz
Alarming			
Alarms		■	■
Power supply			
AC version		90-277 V AC	100-277 V AC
Communication			
RS-485 port		■	■
Modbus RTU		RTU	■
Modbus TCP		1★	■
BACnet IP		1★	■
BACnet MS/TP		1★	■
SNMP protocol		1★	■
Ethernet Port		1★	■

★1 Add E8951 Gateway

BCPM

PE86168

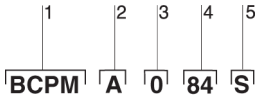

Example BCPM with solid core CTs part number
1. Model
2. Feature set
3. CT spacing (solid core models only)
4. Number of circuits
5. Brand

The PowerLogic™ BCPM uses .333 V AC output split-core CTs for the auxiliary inputs. These CTs are ordered separately from the BCPM.

PB113664

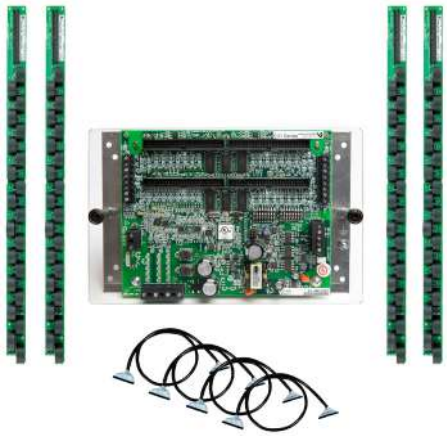

PB113665

* Quantity and style of CT strips and cables included varies by model

BCPM part numbers

BCPM with solid core CTs			
Item		Code	Description
1	Model	BCPM	BCPM with solid core CTs. Highly accurate meter that monitors branch circuits and the incoming power mains and includes full alarming capabilities
2	Feature set	A	Advanced - Monitors power & energy per circuit & mains, Modbus RTU only (add E8951 for other protocols), Meter Main Board comes on an aluminum mounting plate
		E	Advanced, with Ethernet - Monitors power & energy per circuit & mains, Meter Main Board is partially enclosed in a metal housing
3	CT spacing	0	3/4in (19 mm) CT spacing
		1	1in (26 mm) CT spacing
		2	18 mm CT spacing
4	Number of circuits	24	24 circuits, (2) 12-CT strips (18 mm spacing only)
		36	36 circuits, (2) 18-CT strips (18 mm spacing only)
		42	42 circuits, (2) 21-CT strips
		48	48 circuits, (4) 12-CT strips (18 mm spacing only)
		72	72 circuits, (4) 18-CT strips (18 mm spacing only)
		84	84 circuits, (4) 21-CT strips
5	Brand	S	Schneider Electric

BCPM

PB113735

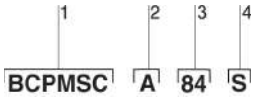

Example BCPMSC with split-core CTs part number.

1 Model.
2 Feature set.
3 Number of circuits.
4 Brand.

PB113666

PB113730

BCPM part numbers (contd.)

BCPM with split-core CTs			
1	Model	BCPMSC	BCPM with split-core CTs. Highly accurate meter that monitors branch circuits and the incoming power mains and includes full alarming capabilities
2	Feature set	A	Advanced - Monitors power and energy per circuit and mains, Modbus RTU only (add E8951 for other protocols), Meter Main Board comes on an aluminum mounting plate
		B	Intermediate - Monitors current per circuit, power and energy per mains, Modbus RTU only (add E8951 for other protocols), Meter Main Board comes on an aluminum mounting plate
		C	Basic - Monitors current only per circuit and mains, Modbus RTU only (add E8951 for other protocols), Meter Main Board comes on an aluminum mounting plate
		E	Advanced, with Ethernet - Monitors power & energy per circuit & mains, Meter Main Board is enclosed in a metal housing
3	Number of circuits	1	42 circuit main and adapter boards (no branch CTs or ribbon cables, order separately)
		2	84 circuit main and adapter boards (no branch CTs or ribbon cables, order separately)
		30	30 split-core CTs (50 A)
		42	42 split-core CTs (50 A)
		60	60 split-core CTs (50 A)
		84	84 split-core CTs (50 A)
		Y63	42 circuits – main and adapter boards on single mounting plate (no branch CTs or ribbon, order separately) - Feature set A only
4	Brand	S	Schneider Electric

*The BCPMSC models with 1, 2 or Y63 as the number of circuits DO NOT INCLUDE ANY branch CTs or ribbon cables (they include only the Main board and adapter board assemblies). These models are provided to allow users to order a specific combination of CT quantities, CT sizes, CT lead lengths and ribbon cable styles and lengths. The CTs and cables must be ordered separately.

The PowerLogic™ BCPMSC uses .333 V AC output split-core CTs for the auxiliary inputs. These CTs are ordered separately from the BCPMSC.

BCPM

PE86284

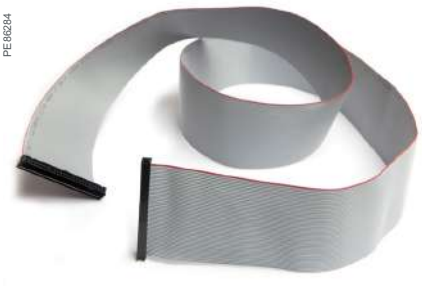

Flat ribbon cable

CBL016

PB113650

Round ribbon cable

CBL022

Cabling and connection

Flat ribbon cables are recommended for use when the BCPM printed circuit board will be mounted inside of the PDU that is being monitored. Round ribbon cables are the prefered choice when the ribbon cable will be threaded through conduit.

BCPM part numbers for solid and split-core CTs (contd.)

BCPM with split-core CTs	
Commercial ref. no.	Description
BCPMA042S	42-circuit solid core power & energy meter, 100 A CTs (2 strips), 19 mm spacing
BCPMA084S	84-circuit solid core power & energy meter, 100 A CTs (4 strips), 19 mm spacing
BCPMA142S	42-circuit solid core power & energy meter, 100 A CTs (2 strips), 25 mm spacing
BCPMA184S	84-circuit solid core power & energy meter, 100 A CTs (4 strips), 25 mm spacing
BCPMA224S	24-circuit solid core power & energy meter, 100 A CTs (2 strips), 18 mm spacing
BCPMA236S	36-circuit solid core power & energy meter, 100 A CTs (2 strips), 18 mm spacing
BCPMA242S	42-circuit solid core power & energy meter, 100 A CTs (2 strips), 18 mm spacing
BCPMA248S	48-circuit solid core power & energy meter, 100 A CTs (4 strips), 18 mm spacing
BCPMA272S	72-circuit solid core power & energy meter, 100 A CTs (4 strips), 18 mm spacing
BCPMA284S	84-circuit solid core power & energy meter, 100 A CTs (4 strips), 18 mm spacing
BCPME042S	42-circuit solid core power & energy meter w/Ethernet, 100 A CTs (2 strips), 19 mm spacing
BCPME084S	84-circuit solid core power & energy meter w/Ethernet, 100 A CTs (4 strips), 19 mm spacing
BCPME142S	42-circuit solid core power & energy meter w/Ethernet, 100 A CTs (2 strips), 25 mm spacing
BCPME184S	84-circuit solid core power & energy meter w/Ethernet, 100 A CTs (4 strips), 25 mm spacing
BCPME224S	24-circuit solid core power & energy meter w/Ethernet, 100 A CTs (2 strips), 18 mm spacing
BCPME236S	36-circuit solid core power & energy meter w/Ethernet, 100 A CTs (2 strips), 18 mm spacing
BCPME242S	42-circuit solid core power & energy meter w/Ethernet, 100 A CTs (2 strips), 18 mm spacing
BCPME248S	48-circuit solid core power & energy meter w/Ethernet, 100 A CTs (4 strips), 18 mm spacing
BCPME272S	72-circuit solid core power & energy meter w/Ethernet, 100 A CTs (4 strips), 18 mm spacing
BCPME284S	84-circuit solid core power & energy meter w/Ethernet, 100 A CTs (4 strips), 18 mm spacing

BCPM

PB113651

BCPMSCA1S

BCPMSCxY63S 42-circuit split-core models come with the main board, (2) adapter boards and ribbon cables all mounted on a backplate, to simplify installation.

PE86183

LVCT00050S

PowerLogic™ LVCT0xxxxS Split-core Low-voltage (1/3V) CTs for Aux inputs (Mains) are ideal for retrofit applications

PB113652 PB113657 PB113658

LVCT20050S

PowerLogic™ LVCT2xxxxS Low-voltage (1/3V) solid core CTs for Aux inputs (Mains) are ideal for panel builders (small, medium, large)

BCPM part numbers for solid and split-core CTs (contd.)

BCPM with split-core CTs	
Commercial ref. no.	Description
BCPMSCA1S	42-circuit split-core power and energy meter, CTs and cables sold separately
BCPMSCA2S	84-circuit split-core power and energy meter, CTs and cables sold separately
BCPMSCA30S	30-circuit split-core power and energy meter, (30) 50 A CTs & (2) 1.2 m cables
BCPMSCA42S	42-circuit split-core power and energy meter, (42) 50 A CTs & (2) 1.2 m cables
BCPMSCA60S	60-circuit split-core power and energy meter, (60) 50 A CTs & (4) 1.2 m cables
BCPMSCAY63S	42-circuit split-core power and energy meter, all boards on backplate, CTs and cables sold separately
BCPMSCA84S	84-circuit split-core power and energy meter, with (84) 50 A CTs & (4) 1.2 m cables
BCPMSCE1S	42-circuit split-core power and energy meter w/Ethernet, CTs and cables sold separately
BCPMSCE2S	84-circuit split-core power and energy meter w/Ethernet, CTs and cables sold separately
BCPMSCE30S	30-circuit split-core power and energy meter w/Ethernet, (30) 50 A CTs & (2) 1.2 m cables
BCPMSCE42S	42-circuit split-core power and energy meter w/Ethernet, (42) 50 A CTs & (2) 1.2 m cables
BCPMSCE60S	60-circuit split-core power and energy meter w/Ethernet, (60) 50 A CTs & (4) 1.2 m cables
BCPMSCE84S	84-circuit split-core power and energy meter w/Ethernet, (84) 50 A CTs & (4) 1.2 m cables

The PowerLogic™ BCPM uses .333 V AC output split-core CTs for the auxiliary inputs. These CTs are ordered separately from the BCPM.

BCPM

Commercial ref. no.	
BCPM split-core branch CTs and adapter boards	
BCPMSCADPBS	BCPM adapter boards, quantity 2, for split-core BCPM
BCPMSCCT0	BCPM 50 A split-core CTs, Quantity 6, 1.8 m lead lengths
BCPMSCCT0R20	BCPM 50 A split-core CTs, quantity 6, 6 m lead lengths
BCPMSCCT1	BCPM 100 A split-core CTs, Quantity 6, 1.8 m lead lengths
BCPMSCCT1R20	BCPM 100 A split-core CTs, Quantity 6, 6 m lead lengths
BCPMSCCT3	BCPM 200 A split-core CTs, Quantity 1, 1.8 m lead lengths
BCPMSCCT3R20	BCPM 200 A split-core CTs, Quantity 1, 6 m lead lengths
Commercial ref. no.	
Additional accessories for use with BCPM products	
BCPMCOVERS	BCPM circuit board cover
BCPMREPAIR	CT repair kit for solid core BCPM (includes one CT)
CBL016	Flat Ribbon cable (quantity 1) for BCPM, length = 1.2 m
CBL017	Flat Ribbon cable (quantity 1) for BCPM, length = 1.5 m
CBL018	Flat Ribbon cable (quantity 1) for BCPM, length = 1.8 m
CBL020	Flat Ribbon cable (quantity 1) for BCPM, length = 3.0 m
CBL021	Flat Ribbon cable (quantity 1) for BCPM, length = 6.1 m
CBL022	Round Ribbon cable (quantity 1) for BCPM, length = 1.2 m
CBL024	Round Ribbon cable (quantity 1) for BCPM, length = 6.1 m

1/3 V low-voltage Split-core CTs for Aux inputs (Mains)

Commercial ref. no.	Amperage rating	Inside dimensions
LVCT00050S	50 A	10 mm x 11 mm
LVCT00101S	100 A	16 mm x 20 mm
LVCT00202S	200 A	32 mm x 32 mm
LVCT00102S	100 A	30 mm x 31 mm
LVCT00202S	200 A	30 mm x 31 mm
LVCT00302S	300 A	30 mm x 31 mm
LVCT00403S	400 A	62 mm x 73 mm
LVCT00603S	600 A	62 mm x 73 mm
LVCT00803S	800 A	62 mm x 73 mm
LVCT00804S	800 A	62 mm x 139 mm
LVCT01004S	1000 A	62 mm x 139 mm
LVCT01204S	1200 A	62 mm x 139 mm
LVCT01604S	1600 A	62 mm x 139 mm
LVCT02004S	2000 A	62 mm x 139 mm
LVCT02404S	2400 A	62 mm x 139 mm

1/3 V low-voltage Solid core CTs for Aux inputs (Mains)

Commercial ref. no.	Amperage rating	Inside dimensions
LVCT20050S	50 A	10 mm
LVCT20100S	100 A	10 mm
LVCT20202S	200 A	25 mm
LVCT20403S	400 A	31 mm

BCPM

Technical specifications

Electrical characteristics		
Type of measurement		
Accuracy	Power/energy	1 % system accuracy (including 50A or 100A branch CTs)
	Voltage	±0.5 % of reading
	Current	±0.5 % of reading
Minimum "ON" current		50mA
Sampling rate Points per cycle		2560 Hz
Data update rate		1.8 seconds (Modbus), 14 seconds (BACnet) 20 sec (SNMP)
Input-voltage characteristics	Measured voltage	150 – 480 V AC L-L 90 – 277 V AC L-N
Power supply	AC	100 – 277 V AC (50/60 Hz)
Auxiliary CT Current Input Range		0-0.333V; CTs must be rated for use with Class 1 voltage inputs
Mechanical characteristics		
Weight		1.5 kg
Dimensions	A/B/C model Circuit board	288 x 146 mm
E model housing (w/brackets on long sides)		253 mm W x 307 mm H x 71 mm D
E model housing (w/brackets on short ends)		210 mm W x 353 mm H x 71 mm D

Environmental conditions	
Operating temperature	0 to 60 °C
Storage temperature	-40 °C to 70 °C
Installation category	CAT III, pollution degree 2
Safety	
Europe	IEC 61010
U.S. and Canada	UL 508 Open type device
Communication	
RS-485 (A/B/C models)	Baud rate: DIP-switch selectable 9600, 19200, 38400 DIP-switch selectable 2-wire or 4-wire RS-485. Parity selectable: Even, Odd or None.
RS-485 (A models)	Baud rate: configured via Web-server. Baud selectable: 9600, 19200, 38400. Parity selectable: Even, Odd or None. 2-wire RS-485.
Ethernet (E models)	10/100 Mbit Ethernet. RJ-45 connection. Static IP or DHCP.
Protocols	Modbus RTU on all models, BCPME models also support Modbus TCP, SNMP, BACnet IP & BACnet MS/TP
Firmware characteristics	
Detection of over-voltage/under-voltage	User-defined alarm thresholds for over-voltage and under-voltage detection
Alarms	Four alarm levels: high-high, high, low and low-low (users define the setpoints for each). Each alarm has a latching status to alert the operator that an alarm has previously occurred. High and Low alarms have instantaneous status to let the operator know if the alarm state is still occurring.
Firmware update	Update via Modbus

BCPM

1/3 V low-voltage CT (LVCT) for Mains - Technical specifications

Electrical characteristics	
Accuracy	1 % from 10 % to 100 % of rated current(LVCT0xxxx0S/1S/2S/3S/4S [split-core]) 0.5 % from 5 % to 100 % of rated current (LVCT2xxxx0S/2S/3S [solid core])
Frequency range	50/60 Hz
Leads	18 AWG, 600 V AC, 1.8m standard length
Max. voltage L-N sensed conductor	300 V AC (LVCT0xxxx0S) 600 V AC (LVCT0xxxx1S/2S/3S/4S, LVCT2xxxxxS)
Environmental conditions	
Operating temperature	0 ºC to 70 ºC (LVCT0xxxx0S/1S) -15 ºC to 60 ºC (LVCT0xxxx2S/3S/4S less than 2400A) -15 ºC to 60 ºC (LVCT02404S [2400A]) -40 ºC to 85 ºC (LVCT2xxxx0S/2S/3S [solid core])
Storage temperature	-40 ºC to 105 ºC (LVCT0xxxx0S/1S) -40 ºC to 70 ºC (LVCT0xxxx2S/3S/4S) -50 ºC to 105 ºC (LVCT2xxxx0S/2S/3S [solid core])
Humidity range	0 to 95 % non-condensing

BCPM

PowerLogic™ BCPM dimensions

PE86286_m

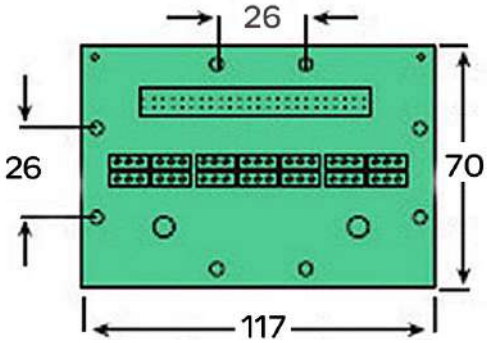

PowerLogic™ BCPM adapter board (one board per 21 split-core branch CTs)

PE86169

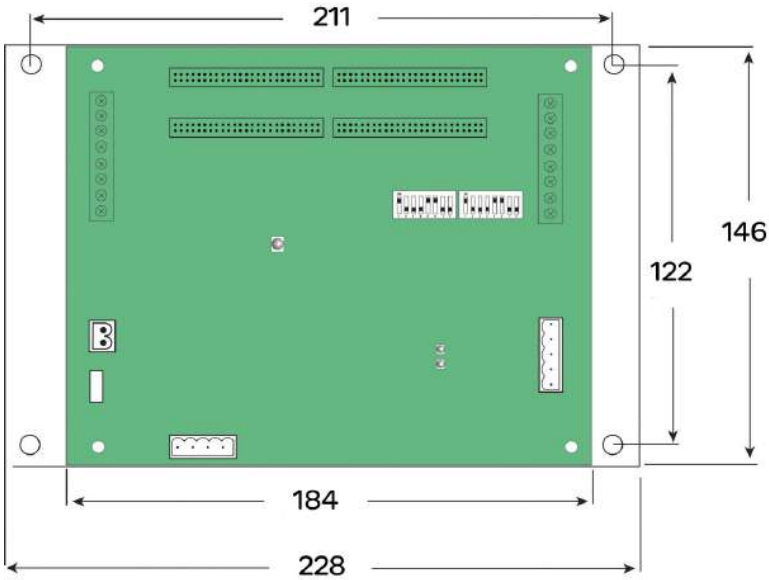

PB113662

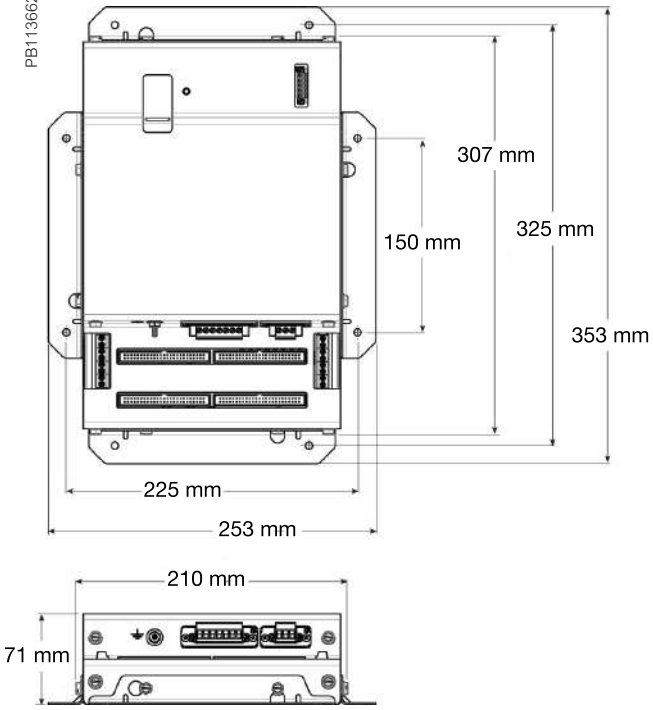

PB113661

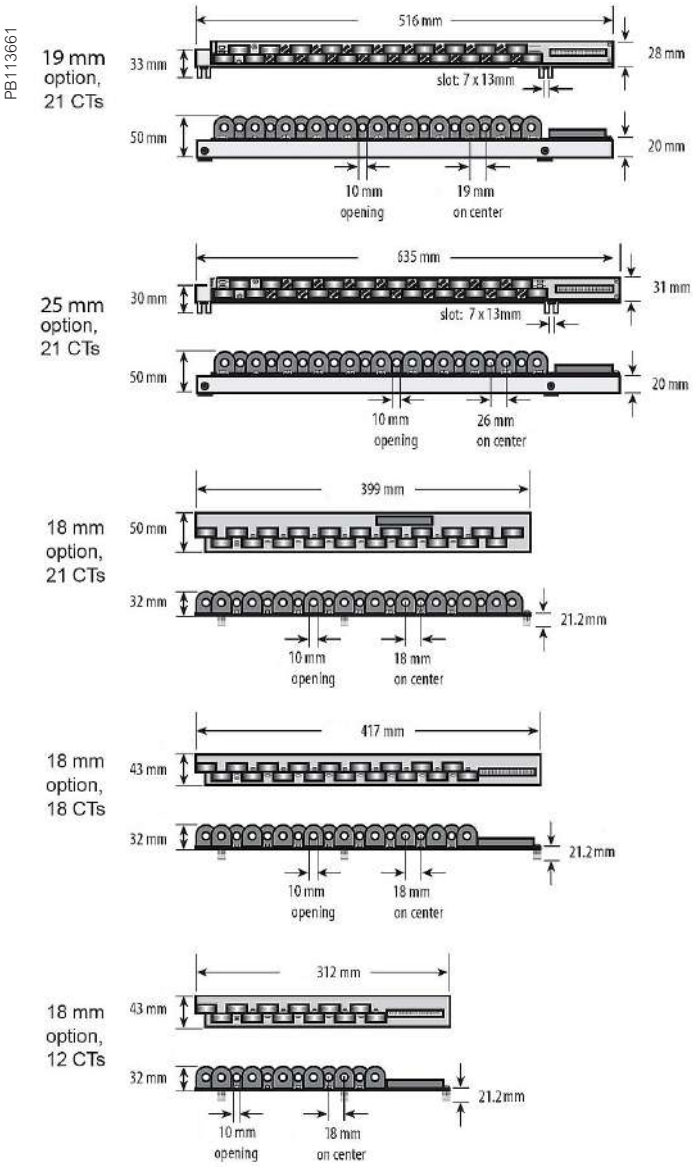

BCPM

50 A-200 A Split-core CT dimensions

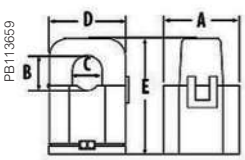

(in mm)

50 Amp
A = 26-35 w/ears
B = 11
C = 10
D = 23-29 w/hinge
E = 40

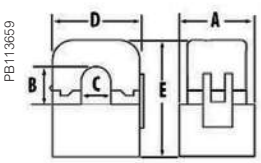

100 Amp
A = 28-37 w/ears
B = 16
C = 16
D = 40
E = 52

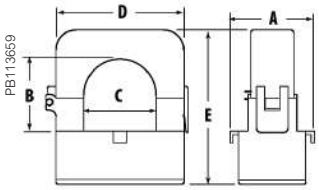

200 Amp
A = 37
B = 32
C = 32
D = 62
E = 69

These dimensions apply to both BCPMSCCTxx (branch CTs) and LVCT0xxxx0S/1S (for Mains) 50 A-200 A CT families.

Solid core CT dimensions

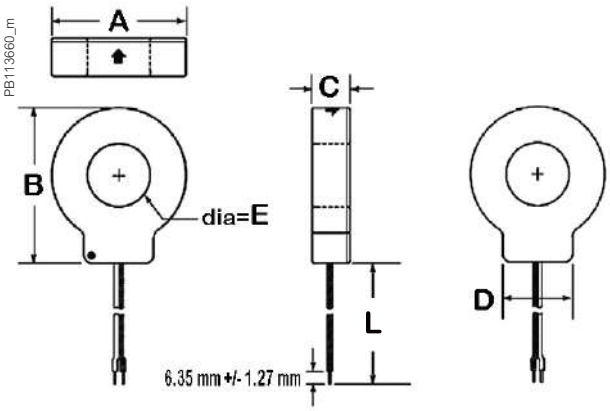

Model	L	A	B	C	D	E
LVCT20050S	1.8 m	33 mm	38 mm	18 mm	21 mm	10 mm
LVCT20100S						
LVCT20202S	1.8 m	59 mm	66 mm	18 mm	31 mm	25 mm
LVCT20403S	1.8 m	70 mm	82 mm	25 mm	36 mm	31 mm

1/3 V low-voltage CT form factor

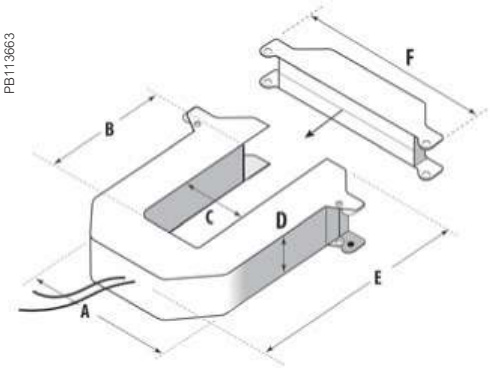

Small form factor
100/200/300 Amp
A = 96 mm
B = 30 mm
C = 31 mm
D = 30 mm
E = 100 mm
F = 121 mm

Medium form factor
400/600/800 Amp
A = 125 mm
B = 73 mm
C = 62 mm
D = 30 mm
E = 132 mm
F = 151 mm

Large form factor
800/1000/1200/
1600/2000/2400 Amp
A = 125 mm
B = 139 mm
C = 62 mm
D = 30 mm
E = 201 mm
F = 151 mm

BCPM

PowerLogic™ BCPM with solid core CT strips installation details

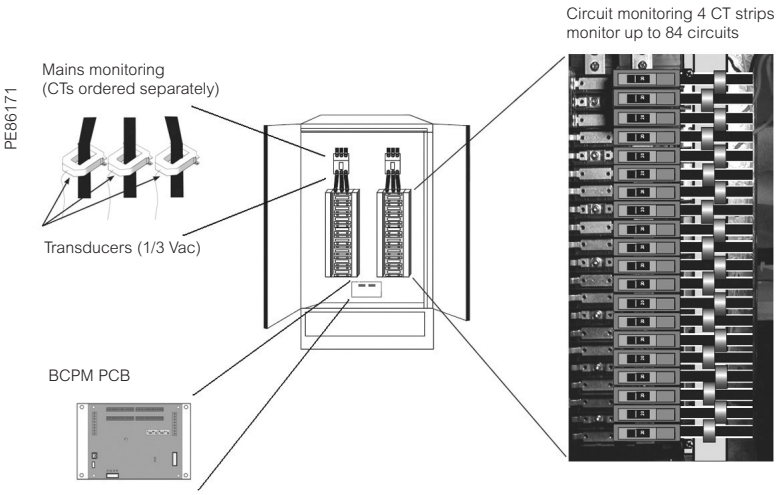

PowerLogic™ BCPM with split-core CTs installation details

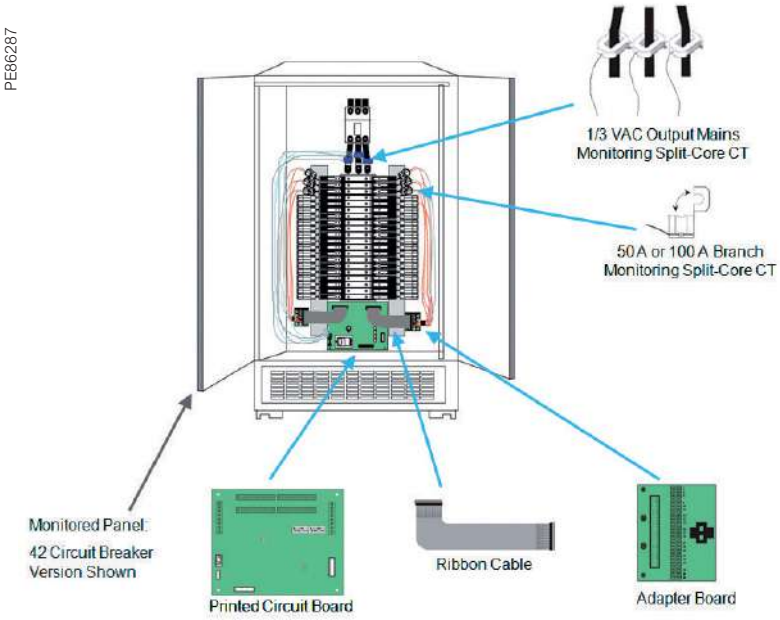

PowerLogic™ EM4000 series

The compact PowerLogic™ EM4000 series multi-circuit energy meter from Schneider Electric enables the reliable reliable monitoring of building electrical loads with a low installation cost-per-point by combining revenue-accurate electricity sub-metering with advanced communications technology.

Applications

- Energy management
- Energy cost allocation
- Utility bill verification

PB113714

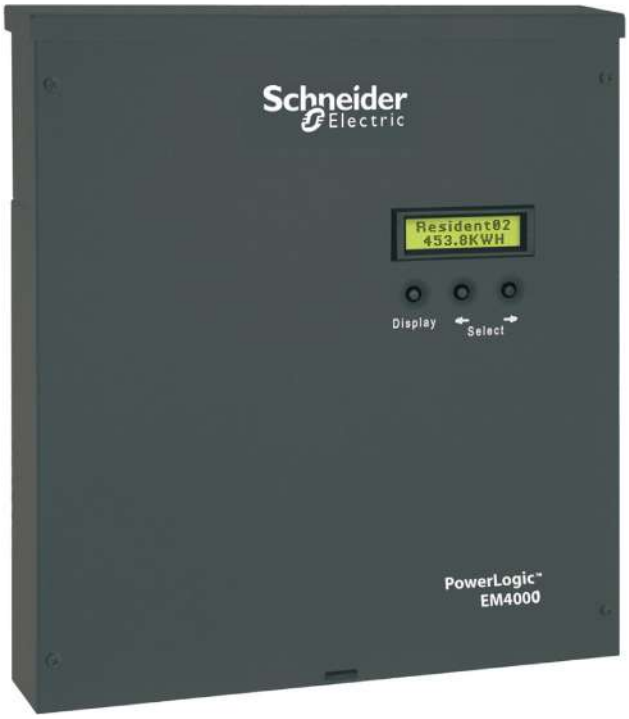

METSEEM403316

The solution for

Markets that can benefit from a solution that includes PowerLogic™ EM4000 series meters:

- Buildings
- Industry
- Healthcare
- Data Centre and networks
- Infrastructure

Benefits

System integrators' benefit

- Ease of integration
- Ease of setup
- Cost effectiveness

Panel builders' benefit

- Ease of installation
- Cost effectiveness
- Aesthetically pleasing
- Simplified ordering

End users' benefit

- Ease of use
- Precision metering & sub-billing
- Billing flexibility
- Comprehensive, consistent and superior performance

Competitive advantages

- Compact, maintenance-free design
- Hi-density, flexible connection
- Direct connection
- Multiple CT types
- No rewiring required
- Integrated communications networks.

Power management solutions

Schneider Electric provides innovative power management solutions to increase your energy efficiency and cost savings, maximise electrical network reliability and availability, and optimise electrical asset performance.

Conformity of standards

- IEC 61557-12
- IEC 62053-22
- IEC 62053-24
- IEC 61010-1
- IEC 61000-4-2
- IEC 61000-4-3
- IEC 61000-4-4
- IEC 61000-4-5
- IEC 61000-4-6
- IEC 61000-4-8

EM4000 series

PB113714

EM4000 series multi-circuit energy meter

The compact PowerLogic™ EM4000 series multi-circuit energy meter from Schneider Electric enables the reliable monitoring of building electrical loads with a low installation cost-per-point by combining revenue-accurate electricity sub-metering with advanced communications technology.

The EM4000 is ideal for departmental metering applications and M&V within office towers, condominiums, apartment buildings, shopping centres and other multi-user environments, or small-footprint retail.

The PowerLogic™ EM4000 series meters monitor up to 24 meter points with a single device. Multiple meters can be combined to support an unlimited number of points.

Two meter models offer a choice of CTs and installation options:

- PowerLogic™ EM4033: 333 mV, split-core CTs
- PowerLogic™ EM4080: 80 mA solid core CTs

Main characteristics

- Compact, maintenance-free design
  - Requires no floor space
- Hi-density, flexible connection
  - From single-pole to single- or three-phase metering, supports up to 24 circuits.
  - Select the connection type using an intuitive configuration tool.
- Direct connection
  - For 100 - 300 V AC L-N electrical distribution systems: 120/240 V, 120/208 V, 277/480 V
- Multiple CT types
  - Support a variety of needs in both new and retrofit installations.
  - 1/3 V output CT option does not require shorting blocks, making it the ideal choice for retrofit installations.
- No rewiring required
  - Use existing wiring to connect to existing panels.
- Integrated communications networks.
  - Onboard Ethernet or RS-485 allows for easy integration into existing communications networks.

Feature selection

Commercial ref. no.	Model	Description
METSEEM403316	EM4033	24 x 333 mV inputs, 120 V control power 60 Hz
METSEEM403336		24 x 333 mV inputs, 277 V control power 60 Hz
METSEEM408016	EM4080	24 x 80 mA inputs, 120 V control power 60 Hz
METSEEM408036		24 x 80 mA inputs, 277 V control power 60 Hz

EM4000 series

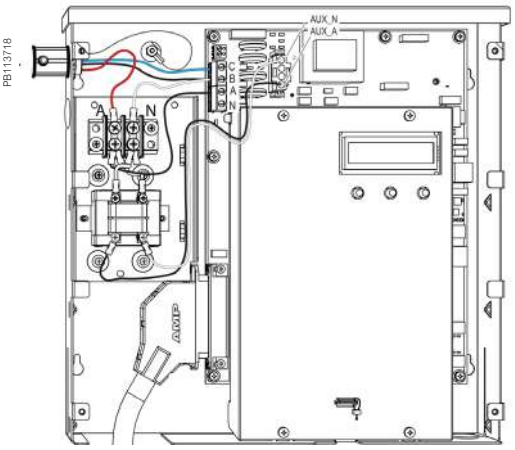

PowerLogic™ EM4000 meter 480Y/277V three-phase wye service connection

Selection guide

General		EM4033	EM4080
Use on LV systems		■	■
Accuracy	+/- 0.5 %	■	■
Accuracy compliance	ANSI C12.1 and C12.20 Class 0.5; IEC 62053-22, Class 0.5S	■	■
Maximum circuits: single-pole / single-phase / three-phase	24 / 12 / 8	■	■
Instantaneous rms values			
Energy	real, kWh received/delivered	■	■
	reactive, kvarh received/delivered	■	■
	apparent, VAh	■	■
Voltage		■	■
Pulse counts		■	■
Voltage and current	V rms, I rms per phase	■	■
Power	real, reactive, apparent	■	■
Power factor		■	■
Measurements available for data logging			
Energy	real, kWh received/delivered	■	■
	reactive, kvarh received/delivered	■	■
	apparent, VAh	■	■
Voltage		■	■
Display			
Backlit LCD display	2 lines of 16 characters	■	■
Optional remote modular display available		■	■
Communication			
Ethernet port		■	■
MODBUS-RTU over RS-485		■	■
Pulse inputs	2	■	■
Protocols: Modbus TCP/IP, HTTP, BACnet/IP, FTP, and SNTP		■	■
Installation options			
0.333 V CTs		■	
80 mA CTs			■
Split-core CT		■	
Solid core CT		■	■

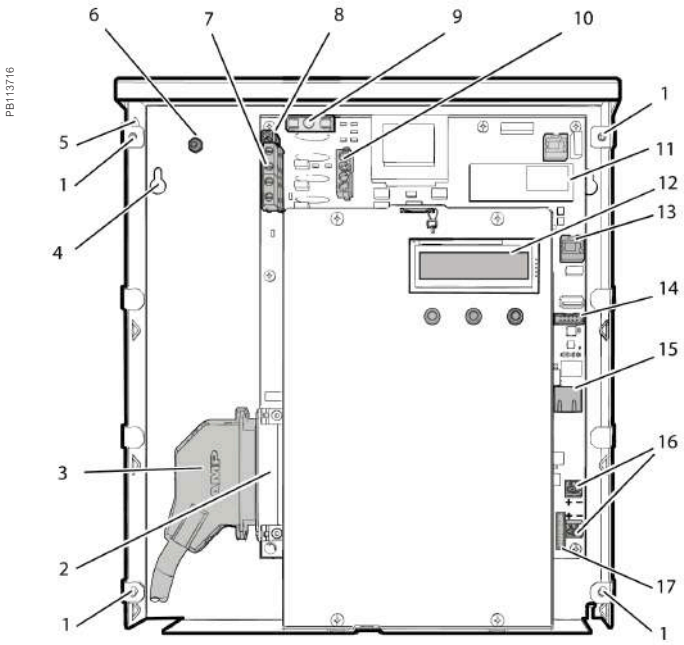

PowerLogic™ EM4033 and PowerLogic™ EM4080 internal view.

Legend:
1 Cover screw location
2 Meter point input connector
3 Cable connector
4 Mounting keyhole
5 Ingress punch-outs
6 Earth stud
6 Sense voltage terminal block
8 Control voltage terminal block
9 Fuse
10 Control voltage jumper
11 RTU interface
12 Display
13 Remote display connector
14 Serial RS-232
15 Ethernet port
16 Pulse in terminal blocks
17 Pulse out connector

EM4000 series

EM4000 technical specifications

Electrical characteristics		
Input-voltage characteristics	Inputs	V1, V2, V3, Vn
	Measured voltage	80 - 480 V AC L-L without PTs Up to 999 kV with external PTs
	Frequency range	60 Hz
Mechanical characteristics		
Weight	EM4033/EM4080	approx. 4.0 kg
Dimensions	EM4033/EM4080	335 x 305 x 55 mm
Environmental conditions		
Operating temperature		-40 °C to 70 °C
Storage temperature		-40 °C to 70 °C
Humidity rating		0 % to 90 % RH non-condensing
Enclosure		Type 1 (indoor or enclosed outdoor use)
Altitude		3000 m
Pollution degree		2
Safety and standards		
UL Certified to IEC/EA/CSA 61010-1		
CSA-C22.2 No 61010-1-04		
FCC Part 15 Class B		
ICES-003 EN 55022, IEC 6100-4-5		
ANSI/TIA968-A: 2002		
Communication		
Ports		Ethernet
		MODBUS-RTU over RS-485
Pulse inputs		2
Protocols: Modbus TCP/IP, HTTP, BACnet/IP, FTP, and SNTP		
Display characteristics		
Integrated backlit LCD display		2 lines, 16 digits per line display; R / L arrow buttons select metering point; Display button cycles through measurements per point.

EM4000 series

EM4X00, CT termination, PT module

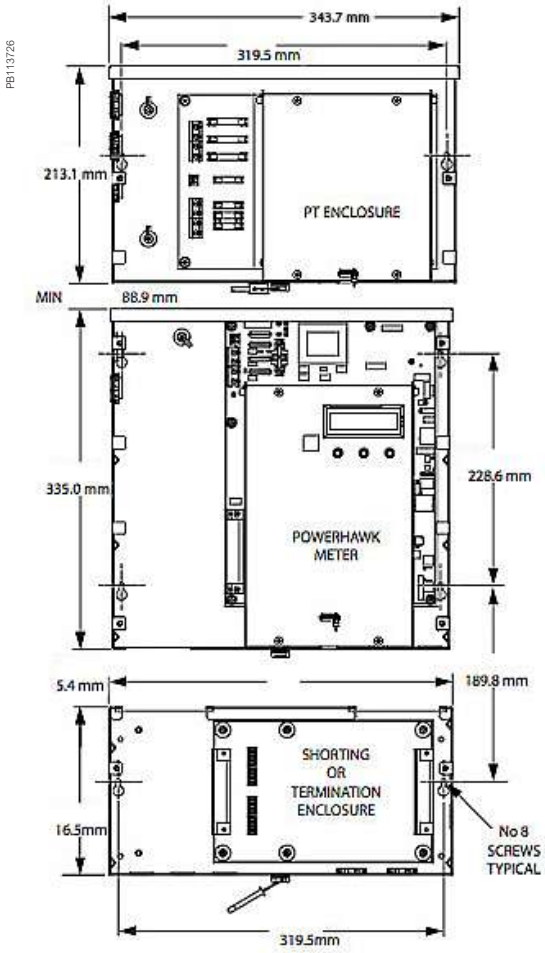

EM4X00, CT termination, PT module

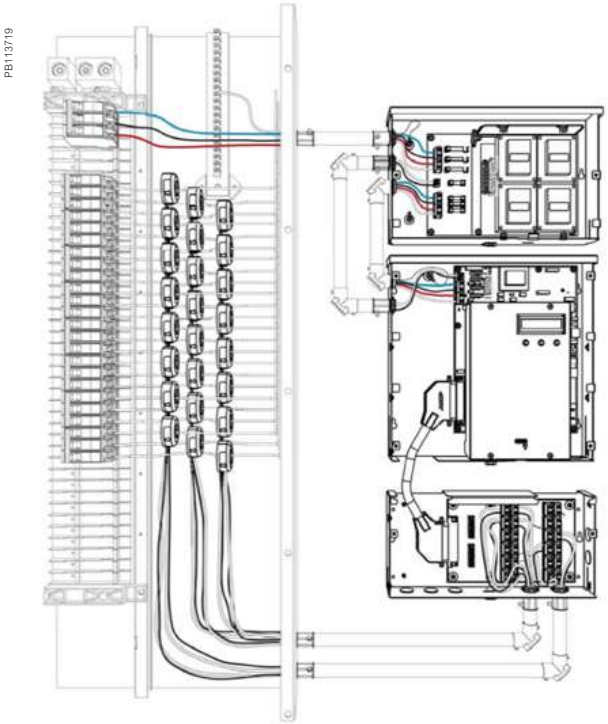

EM4000 series

PB113724

METSEPTMOD480

PT Module

The PT module provides step-down voltage connections to Schneider Electric PowerLogic™ meters for metering single-phase to three-phase voltages of 600 V, 347 V, or 400 V, while meeting all regulatory electrical safety and ANSI 0.5 Accuracy Class standards. The PT module provides both the per-phase input metering voltages and the auxiliary input power required by Schneider Electric PowerLogic™ energy meters.

There are two variants of the PT module that support the following source voltages and wiring configurations:

- 347 V Wye / 600 V Delta variant supports:
  - 347 V, three-phase, 4-wire wye
  - 600 V, three-phase, 3-wire delta
- 480V Delta variant supports:
  - 480 V, three-phase, 3-wire delta

The 347 V/600 V PT module variant has three sense voltage potential transformers for metering. The configuration of the transformers (347 V wye or 600 V delta) is selected by using the jumper provided. The 480V PT module has two sense voltage potential transformers for metering. There is a separate auxiliary power transformer in both variants to operate the meter. All voltage inputs are fused.

PowerHawk PT module specifications			
Dimensions	Height	213.1 mm	
	Width	54 mm	
	Depth	54 mm	
	Weight	5.67 kg	
Fuse ratings	High voltage inputs	F1	T315 mA, 1000 V
		F2	T315 mA, 1000 V
		F3	T315 mA, 1000 V
	Voltage inputs	F4	T250 mA, 250 V
		F5	T250 mA, 250 V
		F6	T250 mA, 250 V
		F7	T250 mA, 250 V
Transformer specifications	Input voltage	600 V	Voltage tolerance: +/-10 %
		480 V	Voltage tolerance: +/-10 %
		347 V	Voltage tolerance: +/-10 %
	Output voltage	120 V	Accuracy: 0.3 %
Environmental	Operating temperature	-40 °C to 70 °C	
	Operating humidity	5 % to 90 % non-condensing	
	Usage environment	Indoor or enclosed outdoor environment	
	Maximum altitude	3000 m	
	Pollution degree	2	

Feature selection

Commercial ref. no.	Description
METSEPTMOD480	480 V PT Module for EM4X00 meter
METSEPTMOD347600	347 V/600 V PT Module for EM4X00 meter

EM4000 series

PB113725

CT Module

PowerLogic™ 4080 meters have two shorting options that provide a seamless and sealable mechanical package. The CT Shorting Module provides CT connections via the color coded 25 pair cable routed into the breaker panel. All CTs are shorted at the same time for safe removal of the meter for maintenance when the electrical circuits are still live.

The CT Termination Module has the same shorting ability, but provides CT connections via 24 2-position screw-down terminal blocks. Individual pairs are then routed from the CT Termination Module to 1 or more breaker panels via conduit knock outs provided on the module. Thus eliminating the need for a splitter box to route CT cables to multiple panels.

Commercial ref. no.	Description
METSECTTERM	CT Termination Module for EM4X00 meter
METSECTSHORT	CT Shorting Module for EM4X00 meter

PB113729

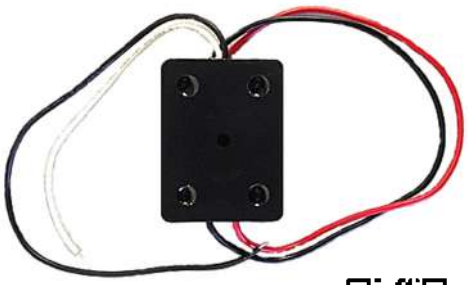

METSECONV580

Converter

The 5 A:80 mA converter is useful in applications where there are existing 5 A CT's integrated into large motors or switch gear. The 5 A:80 mA converter matches the 5 A secondary of the load to the 80 mA input of the meter. In Billing Grade applications, the 5 A:80 mA converter is also used to connect regulatory grade large aperture, large amperage CT's with 5 A secondaries to the 80 mA of PowerLogic™ 4X80 meters.

Commercial ref. no.	Description
METSECONV580	5 A : 80 mA converter for EM4X00 meter

PB111056

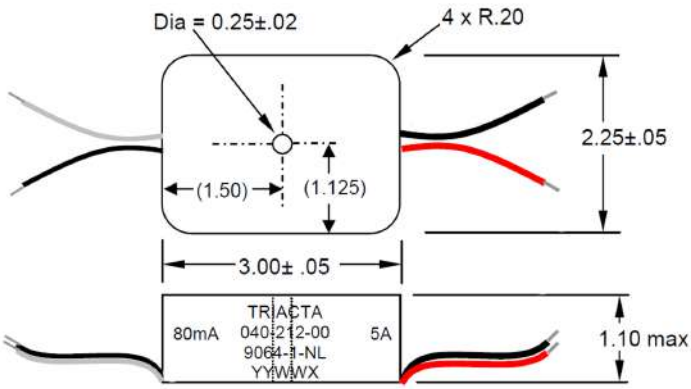

The 5 A to 80 mA converter dimensions

*See appropriate **Installation Guide** for this product.*

EM4000 series

PB111061

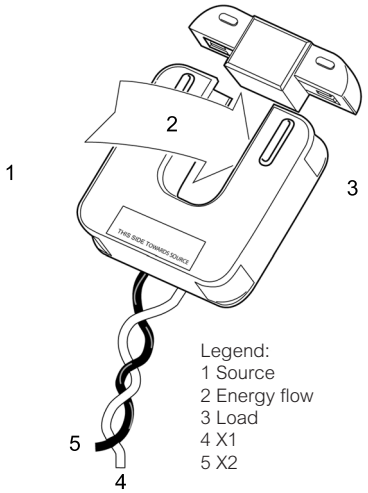

CTs

- Model 8 (80/100 mA Secondary)
- Window Size: 82.5 mm Diameters
- Application: Metering
- Frequency: 50-400 Hz
- Insulation Level: 600 Volts, 10 Kv BIL Full Wave
- Flexible leads available for all case configurations. Flexible leads are UL 1015 105 ˚C, CSA approved #16 AWG, 609.6 mm long standard length. Non-standard lengths are available upon request.
- Terminals are brass studs No. 8-32 UNC with one flat washer, one lock washer and one nut each. Terminals are only available on the square case configuration.
- Mounting brackets kits for the Model 8SHT are available when required.
- Approximate weight: 1.36 kg

PB111059

200 A CT

PB111060

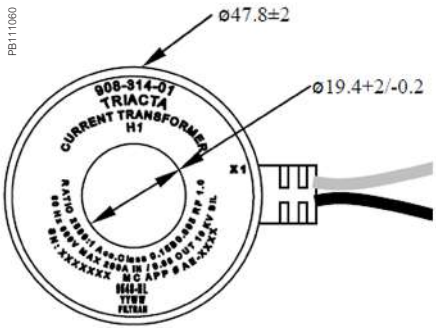

200 A CT dimensions

PB113971

400 A CT

PB113972

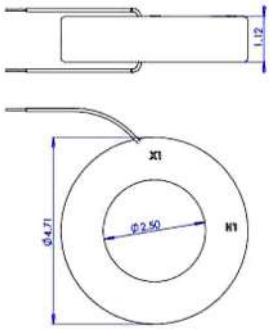

400 A CT dimensions

PB111057

METSECT80600 600 A 80 mA CT

PB111058

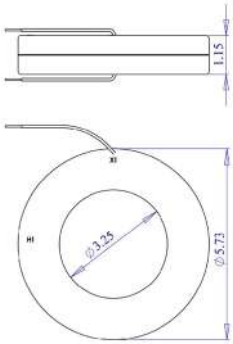

600 A 80 mA CT dimensions

Feature selections

Commercial reference number	Description
METSECT80200	CT, solid core, 200 A primary, 80 mA secondary, for use with EM4X80 multi-circuit meter
METSECT80400	CT, solid core, 400 A primary, 80 mA secondary, for use with EM4X80 multi-circuit meter
METSECT80600	CT, solid core, 600 A primary, 80 mA secondary, for use with EM4X80 multi-circuit meter

PowerLogic™ EM4800 series

The compact PowerLogic™ EM4800 series multi-circuit energy meter from Schneider Electric enables reliable metering of individual tenants with a low installation cost-per-point by combining revenue-accurate electricity sub-metering with advanced communications technology. The ideal fit for high-end cost management applications, providing the measurement capabilities needed to allocate energy usage, perform tenant metering and sub-billing, pin-point energy savings, optimise equipment efficiency and utilisation, and perform a high level assessment of the power quality in an electrical network.

Applications

Capable of essential cost management:

- Multi-tenant metering
- Energy management
- Energy cost allocation
- Utility bill verification

PE86325

METSEEM480525

The solution for

Markets that can benefit from a solution that includes PowerLogic™ EM4800 series meters:

- Buildings
- Industry
- Healthcare
- Data Centre and networks
- Infrastructure

Benefits

System integrators' benefit

- Ease of integration
- Ease of setup
- Cost effectiveness

Panel builders' benefit

- Ease of installation
- Cost effectiveness
- Aesthetically pleasing
- Simplified ordering

End users' benefit

- Ease of use
- Precision metering & sub-billing
- Billing flexibility
- Comprehensive, consistent and superior performance

Competitive advantages

- Compact, maintenance-free design
- Hi-density, flexible connection
- Direct connection
- Multiple CT types
- No rewiring required
- Integrated communications

Power management solutions

Schneider Electric provides innovative power management solutions to increase your energy efficiency and cost savings, maximise electrical network reliability and availability, and optimise electrical asset performance.

Conformity of standards

- IEC61557-12
- IEC62053-22
- IEC62053-24
- IEC 61010-1
- IEC 61000-4-2
- IEC 61000-4-3
- IEC 61000-4-4
- IEC 61000-4-5
- IEC 61000-4-6
- IEC 61000-4-8

EM4800 series

PE86325

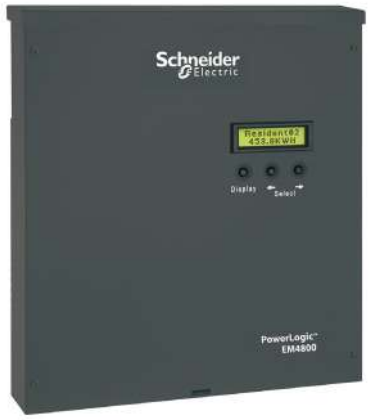

EM4800 series multi-circuit energy meter front (above), installed in panel (below)

PE86326

The compact PowerLogic™ EM4800 series multi-circuit energy meter from Schneider Electric enables reliable metering of individual tenants with a low installation cost-per-point by combining revenue-accurate electricity sub-metering with advanced communications technology.

The EM4800 is ideal for multi-tenant or departmental metering applications within office towers, condominiums, apartment buildings, shopping centres and other multi-user environments.

The PowerLogic™ EM4800 series meters monitor up to 24 tenants with a single device. Multiple meters can be combined to support an unlimited number of suites.

- Three meter models offer a choice of CT secondary ratings and installation options:
  - PowerLogic™ EM4805: 5 A, split or solid core CTs
  - PowerLogic™ EM4833: 0.333 V, split or solid core CTs
  - PowerLogic™ EM4880: 80 mA, solid core CTs
- Main characteristics
  - Compact, maintenance-free design
    - Requires no floor space.
- Hi-density, flexible connection
  - From single-pole to single- or three-phase metering, supports up to 24 circuits. Select the connection type using an intuitive configuration tool.
- Direct connection
  - For 100 - 300 V AC L-N electrical distribution systems:
    - 120/240 V, 120/208 V, 230/240 V, 220/380 V, 240/415 V, 277/480 V
- Multiple CT types
  - Support a variety of needs in both new and retrofit installations.
    - 1/3 V output CT option does not require shorting blocks, making it the ideal choice for retrofit installations.
- No rewiring required
  - Use existing wiring to connect to existing panels.
- Integrated communications
  - Onboard Ethernet and modem allows for easy integration into existing communications networks.

Feature selections

Commercial ref. no.	Model	Description
METSEEM480525	EM4805	24 x 5 A inputs, 230/240 V control power, 50 Hz
METSEEM480516		24 x 5 A inputs, 120 V control power, 60 Hz
METSEEM483325	EM4833	24 x 333 mV inputs, 230/240 V control power, 50 Hz
METSEEM483316		24 x 333 mV inputs, 120 V control power, 60 Hz
METSEEM488016	EM4880	24 x 80 mA inputs, 120 V control power, 60 Hz
METSEEM488025		24 x 80 mA inputs, 230/240 V control power, 50 Hz

EM4800 series

Selection guide

General		EM4805	EM4833	EM4880
Use on LV systems		■	■	■
Accuracy	+/- 0.5 %	■	■	■
Accuracy compliance	ANSI C12.1 and C12.20 Class 0.5; IEC 62053-22, Class 0.5S	■	■	■
Maximum circuits: single-pole / single phase / three-phase	24 / 12 / 8	■	■	■
Instantaneous rms values				
Energy	Real, kWh received/delivered	■	■	■
	Reactive, kvarh received/ delivered	■	■	■
	Apparent, VAh	■	■	■
Voltage		■	■	■
Pulse counts		■	■	■
Voltage and current	V rms, I rms per phase	■	■	■
Power	Real, reactive, apparent	■	■	■
Power factor		■	■	■
Measurements available for data logging				
Energy	Real, kWh received/delivered	■	■	■
	Reactive, kvarh received/ delivered	■	■	■
	Apparent, VAh	■	■	■
Voltage		■	■	■
Display				
Backlit LCD display	2 lines of 16 characters	■	■	■
Optional remote modular display available		■	■	■
Communication				
Ethernet port		■	■	■
V.90 modem port		■	■	■
Pulse inputs	2	■	■	■
Protocols: Modbus TCP/IP, HTTP, BACnet/IP, FTP, and SNTP		■	■	■
Installation options				
5 A CTs		■		
0.333 V CTs			■	
80 mA CTs				■
Split-core CT		■	■	
Solid core CT		■	■	■
Remote modular display		■	■	■

EM4800 series

Electrical characteristics		
Input-voltage characteristics	Inputs	V1, V2, V3, Vn
	Measured voltage	80 - 480 V AC L-L without PTs Up to 999 kV with external PTs
	Frequency range	50/60 Hz
Mechanical characteristics		
Weight	EM4805	approx. 5.4 kg
	EM4833/EM4880	approx. 4.0 kg
Dimensions	EM4805	335 x 44 x 55 mm
	EM4833 / EM4880	335 x 305 x 55 mm
Environmental conditions		
Operating temperature		-40 °C to 70 °C
Storage temperature		-40 °C to 70 °C
Humidity rating		0 % to 90 % RH non-condensing
Enclosure		Type 1 (indoor or enclosed outdoor use)
Altitude		3000 m
Pollution degree		2
Safety and standards		
UL Certified to IEC/EA/CSA 61010-1		
CSA-C22.2 No 61010-1-04		
FCC Part 15 Class B		
ICES-003 EN55022, IEC 6100-4-5		
ANSI/TIA968-A: 2002		
Communication		
Ports		Ethernet
		V.90 modem
Pulse inputs		2
Protocols		Modbus TCP/IP, HTTP, BACnet/IP, FTP, and SNTP
Display characteristics		
Integrated backlit LCD display		2 ines, 16 digits per line display; R / L arrow buttons select metering point; Display button cycles through measurements per point.

PowerLogic™ EM4900 series

The PowerLogic™ EM4900 Series Multi-Circuit Meters make it easy to add many metering points without having to purchase, mount, wire and commission individual energy meters. Simply add a single device with common voltage inputs and communication interface that can measure the current, voltage, power, energy consumption, and Total Harmonic Distortion (THD) of up to (14) 3-phase circuits with a single board or up to (28) 3-phase circuits with a two board configuration. Save on both equipment cost and installation.

Applications

- Commercial and residential subtenant billing
- Load-based cost allocation
- Measuring for load balancing and demand response
- Overload protection

PB117150

PB117149

METSEEM4904E

METSEEM4904A

The solution for

Markets that can benefit from a solution that includes PowerLogic™ EM4900 series meters:

- Buildings
- Industry
- Healthcare
- Hotels, Multi-Dweller Units (condos)

Benefits

System integrators' benefit

- Ease of integration
- Ease of setup
- Cost effectiveness

Panel builders' benefit

- Ease of installation
- Cost effectiveness
- Aesthetically pleasing
- Simplified ordering

End users' benefit

- Ease of use
- Precision metering & sub-billing
- Billing flexibility
- Comprehensive, consistent and superior performance

Competitive advantages

- Lower cost and space per metering point
- Adapts to any mix of metering needs (1ph, 2ph, 3ph with or without Neutral wire)
- Class 0.5 accuracy for Revenue Grade measurement
- THD monitoring to help identify problem loads and early wear and tear
- Capable of concurrent communication to software packages, including PowerLogic™ software packages and third party systems

Power management solutions

Schneider Electric provides innovative power management solutions to increase your energy efficiency and cost savings, maximise electrical network reliability and availability, and optimise electrical asset performance.

Conformity of standards

- EN 61000-6-3 Class B - Part 6-3
- EN 61000-6-3 Class B - Part 6-3
- EN 61000-6-4 Class A - Part 6
- EN 61010-1 - Part 1
- EN 61326-1 Class A - Part 1
- EN 61326-1 Class B - Part 1
- IEC 62053-22 Class 0.5 - Part 21
- FCC 47 CFR Part 15 Class A & Class B
- UL 508 Open Device Type
- IEC 61010-1 - Part 1

EM4900 series

PB117149

PowerLogic™ EM4914A

PB117153

PowerLogic™ EM4914E

PB117151

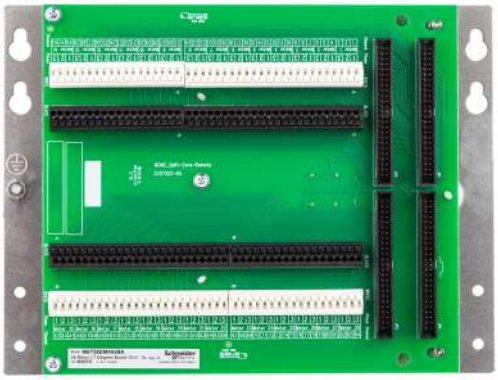

28 Meter adapter board (EM4928A and EM4928E)

To aid in commissioning, a configuration software tool, an Ethernet discovery tool (for the EM49xxE) and a User Guide are available online at www.se.com.

- Main characteristics
  - Add lots of metering points without lots of cost
    - Add up to 28 3-phase meters by installing a single product small enough to fit inside many distribution panels. Save on both equipment cost and installation cost. Common voltage and communication connections and color-coded push-in CT connections save installation time and effort.
  - Class 0.5 accuracy for Revenue Grade measurements
    - Power and Energy measurements with ANSI and IEC class 0.5 accuracy provide the accuracy needed for tenant billing applications. Voltage and current measurement accuracy is 0.5 % and currents are measured down to 0.1% of the CT range. Easily differentiate between the flow of low current and a trip or load disconnect where no current flows.
  - Total Harmonics Distortion measurements
    - Helps assess basic power quality to reduce risks to the load and provide indication of potential early wear and tear of the electrical network and its load.
  - Common CTs, 1/3V outputs
    - CTs with low-voltage outputs eliminate the need for shorting blocks that add cost and labor to the installation. They also allow long CT lead extensions without compromising accuracy. Choose from a range of our CT styles and sizes or use any CTs with industry-standard 0.333V outputs.
  - Models with integrated Ethernet offer broad protocol support
    - All models integrate easily into existing networks using Modbus RTU communications over an RS-485 serial link. EM49xxE models offer integrated Ethernet and add support for Modbus TCP, BACnet IP, BACnet MS/TP and SNMP. Those Ethernet protocols can be run in parallel allowing multiple software to access the device (Building Management System, Energy Management System, etc.) An optional external gateway can be added to EM49xxA models to offer the same capability.
  - Compatible with PowerLogic™ power monitoring software
    - Easily turn the large amount of data collected by the devices into useful decision making information.
  - Configure the meters you want
    - Choose 4, 8, 14 or 28 3-phase meters. User-configurable to any combination of 1-, 2-, 3-phase meters. Reconfigure channels as needed to monitor neutral current.

EM4900 series

Technical specifications

Measurements	
Measurement voltage	90 t0 300 V AC L-N, 50/60 Hz
Total Harmonic Distortion (THD)	THD % voltage L-L, L-N and THD % on current
Control power	
EM49xxA	90 to 277 V AC L-N, 50/60 Hz
EM49xxE	100 to 277 V AC L-N, 50/60 Hz
Accuracy	
Power/Energy	IEC 62053-21 Class 0.5, ANSI C12.20 class 0.5
Voltage	±0.5% of reading 90 to 277 V L-N
Current	±0.5% of reading from 2% to 100% of full-scale
Operation	
Sampling frequency	2560 Hz
Update rate	1.8 seconds (both panels)
Overload capability	22 kAIC
EM49xxA serial communication	
Type	Modbus RTU
Connection	DIP switch-selectable 2-wire or 4-wire, RS-485
Address	DIP switch-selectable address 1 to 247 (in pairs of 2) (See Installation Guide)
Baud rate	DIP switch-selectable 9600, 19200, 38400
Parity	DIP switch-selectable NONE, ODD, EVEN
Communication format	8 data bits, 1 start bit, 1 stop bit
Termination	5-position plug-in connector (TX+ TX- SHIELD TX+/RX+ TX-/RX-)
EM49xxE serial communication	
Physical Interface	2-wire RS-485
Serial protocols supported	Modbus RTU or BACnet MS/TP
Address range	1 to 247 for Modbus RTU; 0 to 127 for BACnet MS/TP
Baud rate	9600, 19200, 38400
Parity	Modbus RTU: NONE, ODD, EVEN BACnet MS/TP: NONE (fixed)
Communication format	8 data bits, 1 start bit, 1 stop bit
Termination	2x3 position connector
EM49xxE Ethernet communication	
Physical interface	Protocols Supported
Protocols supported	Modbus TCP, BACnet IP, SNMP V2c
Wire size range	
Removable connectors on main board	24 to 12 AWG
CT Terminals and EM49xxE serial connector terminals	26 to 16 AWG
Terminal block torque	
Removable connectors	0.5 to 0.6 N-m
Mechanical	
Ribbon cable support (28-meter models only)	0.9 m round ribbon cable ships standard; up to 6 m flat or round available
Operating conditions	
Operating temperature range	0 to 60 °C (<95% RH non-condensing)
Storage temperature range	-40 to 70 °C
Altitude of operation	3000 m
Mounting location	Not suitable for wet locations. For indoor use only.
Compliance information	
Agency approvals	UL 508 open type device(+1), IEC/EN 61010-1
Installation category	Cat III, pollution degree 2(+2)
Conducted emissions	EM49xxA Models: FCC part 15 Class B, EN 61000-6-3, EN 61326-1 Class B (residential & light industrial)
Radiated emissions	EM49xxE Models: FCC part 15 Class A, EN 6100-6-4, EN 61326-1 Class A
Conducted and radiated immunity	EN 61000-6-2 and EN 61326-1

(+1) Install EM49xx in appropriate fire enclosure; if used with circuits higher than product ratings, circuits must be segregated per UL 508A Sec 17.5 (EM49xx internal circuitry are not circuits as defined by UL 508A).
(+2) A Pollution Degree 2 environment must control conductive pollution and the possibility of condensation or high humidity. Consideration must be given to the enclosure, the correct use of ventilation, thermal properties of the equipment and the relationship with the environment.

EM4900 series

1/3 V low-voltage CT (LVCT)

Electrical characteristics	
Accuracy	1 % from 10 % to 100 % of rated current(LVCT0xxxx0S/1S/2S/3S/4S [split-core]) 0.5 % from 5 % to 100 % of rated current (LVCT2xxxx0S/2S/3S [solid core])
Frequency range	50/60 Hz
Leads	18 AWG, 600 V AC, 1.8 m standard length
Max. voltage L-N sensed conductor	300 V AC (LVCT0xxxx0S) 600 V AC (LVCT0xxxx1S/2S/3S/4S, LVCT2xxxxxS)
Measurements	
Real time measurements	Current: multi-phase average and per phase Current phase angle per branch Real power (kW): multi-phase total and per phase Apparent power (kVA): multi-phase total and per phase Power factor: multi-phase average and per phase
Demand measurements	Current present demand: multi-phase average and per phase Real power (kW) present demand: multi-phase average and per phase
Historic maximums	Maximum instantaneous current: multi-phase average and per phase Maximum current demand: multi-phase average and per phase Maximum real power demand: multi-phase total and per phase
Accumulate energy	Energy (kWh): multi-phase total and per phase
Energy snapshots	Energy (kWh): multi-phase total and per phase

EM4900 series

1 2 3
METSEEM49 14 E

1 Model.
2 Number of 3-phase meters (without neutral current)
3 Communication interfaces & protocols.

PB117149

EM49xxA Main Board

PB117150

EM49xxE Main Unit

PB117151

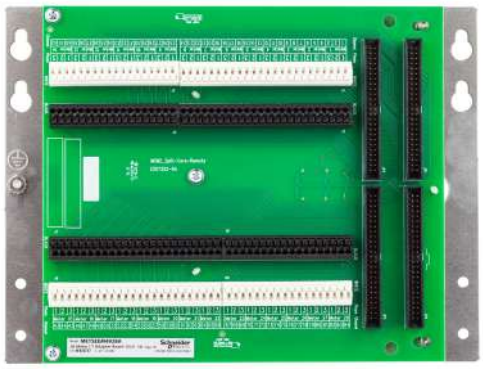

CT Adapter Assembly (28-Meter models only)

EM4900 series part numbers - BCPM with solid core CTs

Item		Code	Description
1	Model	METSEEM49	Multi-Circuit Meter
2	Number of 3-phase Meters	04	Up to (4) 3-phase Meters (see table for variations)
		08	Up to (8) 3-phase Meters (see table for variations)
		14	Up to (14) 3-phase Meters (see table for variations)
		28	Up to (28) 3-phase Meters (see table for variations)
3	Communication Interfaces & Protocols	A	RS-485 Serial with Modbus RTU (add E8951 for other protocols)
		E	Ethernet with Modbus TCP, BACnet IP and SNMP protocols and RS-485 Serial with Modbus RTU or BACnet IP

		Number of meters		
Commercial ref. no.	"E" - Integrated Ethernet	3-phase	2-phase	1-phase
METSEEM4904A	METSEEM4904E	4	6	12
METSEEM4908A	METSEEM4908E	8	12	24
METSEEM4914A	METSEEM4914E	14	21	42
METSEEM4928A	METSEEM4928E	28	42	84

Number of meters supported:

EM4900 models are all factory-configured as all 3-phase meters (w/o neutral). They can be easily re-configured to any combination of 1-ph, 2-ph or 3-ph meters (with ION Setup). Any unused channels can be used to measure neutral current. Label overlays (to re-number CT connections) are provided for 1-ph/2-ph applications.

Commercial ref. no.	EM4900 multi-circuit meters
METSEEM4904A	Multi-Circuit Meter – (4) 3-phase meters - Modbus RTU only
METSEEM4908A	Multi-Circuit Meter – (8) 3-phase meters - Modbus RTU only
METSEEM4914A	Multi-Circuit Meter – (14) 3-phase meters - Modbus RTU only
METSEEM4928A	Multi-Circuit Meter – (28) 3-phase meters - Modbus RTU only
METSEEM4904E	Multi-Circuit Meter – (4) 3-phase meters - Ethernet and Serial (Modbus, BACnet & SNMP)
METSEEM4908E	Multi-Circuit Meter – (8) 3-phase meters - Ethernet and Serial (Modbus, BACnet & SNMP)
METSEEM4914E	Multi-Circuit Meter – (14) 3-phase meters - Ethernet and Serial (Modbus, BACnet & SNMP)
METSEEM4928E	Multi-Circuit Meter – (28) 3-phase meters - Ethernet and Serial (Modbus, BACnet & SNMP)

EM4900 series

PE86284

CBL008

Flat ribbon cable

PB117152

CBL022

Round ribbon cable

PE86183

LVCT00050S

PowerLogic™ LVCT0xxxxS split-core Low-voltage (1/3V) CTs are ideal for retrofit applications

PB113652

PB113658

LVCT20050S

PowerLogic™ LVCT2xxxxS Low-voltage (1/3V) solid core CTs are ideal for panel builders (small, medium, large)

EM4900 series accessories

Commercial reference number	Description
BCPMCOVERS	EM4900 circuit board cover
E8951	Modbus to BACnet protocol converter
Ribbon cables for 28-meter models	
1.22 m cables are standard – others must be ordered separately	
CBL008	Flat Ribbon cable (quantity 1) for BCPM, length = 0.45 m
CBL016	Flat Ribbon cable (quantity 1) for BCPM, length = 1.2 m
CBL017	Flat Ribbon cable (quantity 1) for BCPM, length = 1.5 m
CBL018	Flat Ribbon cable (quantity 1) for BCPM, length = 1.8 m
CBL019	Flat Ribbon cable (quantity 1) for BCPM, length = 2.4 m
CBL020	Flat Ribbon cable (quantity 1) for BCPM, length = 3.0 m
CBL021	Flat Ribbon cable (quantity 1) for BCPM, length = 6.1 m
CBL022	Round Ribbon cable (quantity 1) for BCPM, length = 1.2 m
CBL023	Round Ribbon cable (quantity 1) for BCPM, length = 3 m
CBL024	Round Ribbon cable (quantity 1) for BCPM, length = 6.1 m
CBL031	Round Ribbon cable (quantity 1) for BCPM, length = 0.5 m
CBL033	Round Ribbon cable (quantity 1) for BCPM, length = 0.8 m

1/3 V low-voltage Split-core CTs

Commercial reference number	Amperage rating	Inside dimensions
LVCT00050S	50 A	10 x 11 mm
LVCT00101S	100 A	16 x 20 mm
LVCT00201S	200 A	32 x 32 mm
LVCT00102S	100 A	30 x 31 mm
LVCT00202S	200 A	30 x 31 mm
LVCT00302S	300 A	30 x 31 mm
LVCT00403S	400 A	62 x 73 mm
LVCT00603S	600 A	62 x 73 mm
LVCT00803S	800 A	62 x 73 mm
LVCT00804S	800 A	62 x 139 mm
LVCT01004S	1000 A	62 x 139 mm
LVCT01204S	1200 A	62 x 139 mm
LVCT01604S	1600 A	62 x 139 mm
LVCT02004S	2000 A	62 x 139 mm
LVCT02404S	2400 A	62 x 139 mm

1/3 V low-voltage Solid core CTs

Commercial reference number	Amperage rating	Inside dimensions
LVCT20050S	50 A	10 mm
LVCT20100S	100 A	10 mm
LVCT20202S	200 A	25 mm
LVCT20403S	400 A	31 mm

EM4900 series

EM49xxA main board dimensions

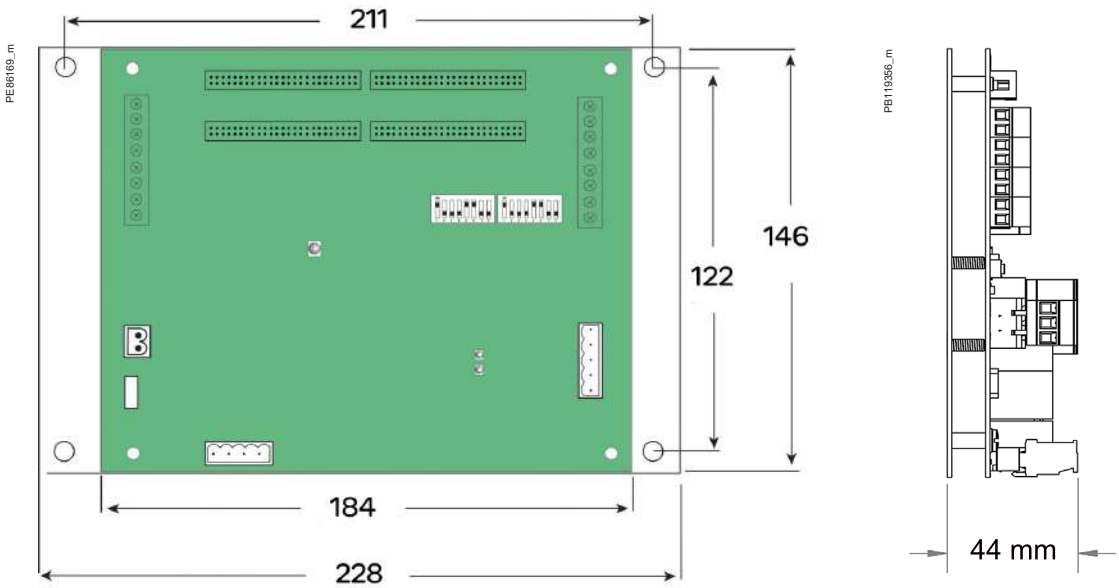

28-Meter CT adapter assembly dimensions

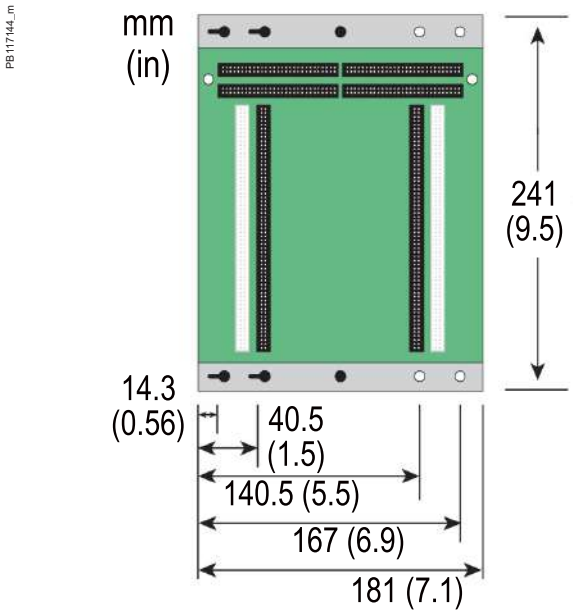

EM4900 series

50 A-200 A Split-core CT dimensions

PB113659

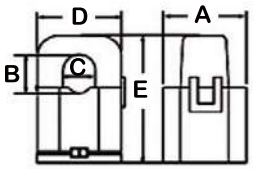

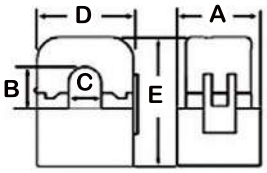

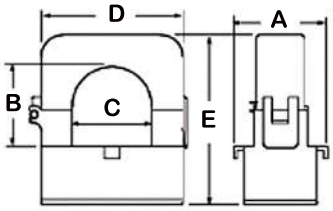

CT rating	A	B	C	D	E
50 A	26 mm	11 mm	10 mm	23 mm	40 mm
100 A	28 mm	16 mm	16 mm	40 mm	52 mm
200 A	37 mm	32 mm	32 mm	62 mm	69 mm

Solid core CT dimensions

PB113660

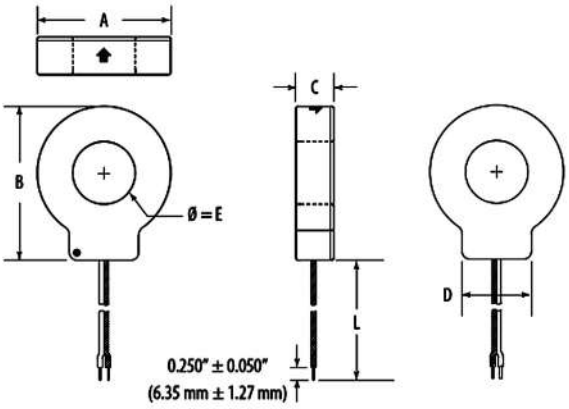

Model	L	A	B	C	D	E
LVCT20050S	1.8 m	33 mm	38 mm	18 mm	21 mm	10 mm
LVCT20100S						
LVCT20202S	1.8 m	59 mm	66 mm	18 mm	31 mm	25 mm
LVCT20403S	1.8 m	70 mm	82 mm	25 mm	36 mm	31 mm

PB113663

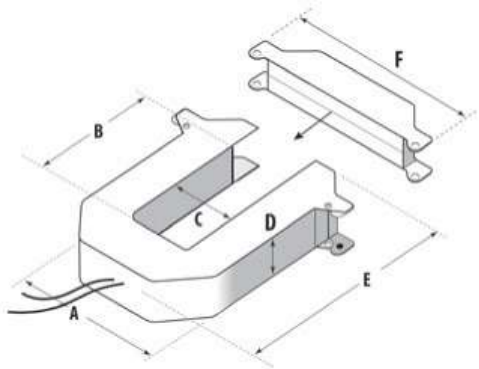

Split-core CT dimensions - see table.

1/3 V low-voltage CT form factor

Small form factor 100/200/300 A	Medium form factor 400/600/800 A	Large form factor 800/1000/1200/ 1600/2000/2400 A
A = 96 mm	A = 125 mm	A = 125 mm
B = 30 mm	B = 73 mm	B = 139 mm
C = 31 mm	C = 62 mm	C = 62 mm
D = 30 mm	D = 30 mm	D = 30 mm
E = 100 mm	E = 132 mm	E = 201 mm
F = 121 mm	F = 151 mm	F = 151 mm

Retrofit Products

The advantages of using retrofit products throughout your power monitoring system are numerous and proven. Whether you install these products as part of an upgrade or as add-on modules in a new build environment, ease of installation and commissioning will reap huge economic benefits. The PowerLogic™ range is designed to retrofit existing switchboards and enhance the energy efficiency of buildings for many years.

These products are:

- Easy and cost-effective to install
- Able to collect a broad scop of electrical data
- Able to utilize a variety of meters to measure WAGES (Water, Air, Gas, Electricity, Steam) usage
- Transmit all data to a centralized data concentrator for detailed analysis

PB105431

METSEEM3502

METSEEM4235

PowerLogic™ EM3500 series

The PowerLogic™ EM3500 Series DIN Rail Meter combines exceptional performance and easy installation to deliver a cost-effective solution for power monitoring applications.

The EM35xx can be installed on standard DIN rail or surface mounted as needed. Pulse output and phase alarms provide additional versatility.

Applications

Capable of essential cost management:

- Energy monitoring in building automation systems
- Renewable energy monitoring
- Commercial sub-metering
- Energy management
- Industrial monitoring
- Accurate cost allocation

PB105431

METSEEM3502

The solution for

Markets that can benefit from a solution that includes PowerLogic™ EM3500 series meters:

- Buildings
- Industry
- Healthcare
- Data Centre and networks
- Infrastructure

Benefits

System integrators' benefit

- Ease of integration
- Ease of setup
- Cost effectiveness

Panel builders' benefit

- Ease of installation
- Cost effectiveness
- Aesthetically pleasing
- Simplified ordering

End users' benefit

- Ease of use
- Precision metering & sub-billing
- Billing flexibility
- Comprehensive, consistent and superior performance

Competitive advantages

- DIN rail mounting option; easy installation
- Real energy output and phase loss alarm output
- 90-600 V AC; application versatility with fewer models to stock
- Bright backlit LCD; easy visibility in dark enclosures
- Data logging capability safeguard during power failures
- EM35xx models compatible with LVCTs from 5 A to 32000 A
- User-enabled password protection prevents tampering
- Native BACnet MS/TP support (no gateway)

Power management solutions

Schneider Electric provides innovative power management solutions to increase your energy efficiency and cost savings, maximise electrical network reliability and availability, and optimise electrical asset performance.

Conformity of standards

- IEC 61557-12
- IEC 62053-22
- IEC 62053-24
- IEC 61010-1
- IEC 61000-4-2
- IEC 61000-4-3
- IEC 61000-4-4
- IEC 61000-4-5
- IEC 61000-4-6
- IEC 61000-4-8

EM3500 series

PB105431

PowerLogic™ EM3500

PB113727

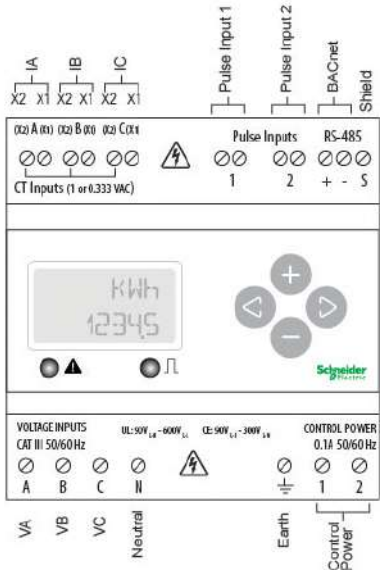

EM3500 parts and connection terminals

PB113728

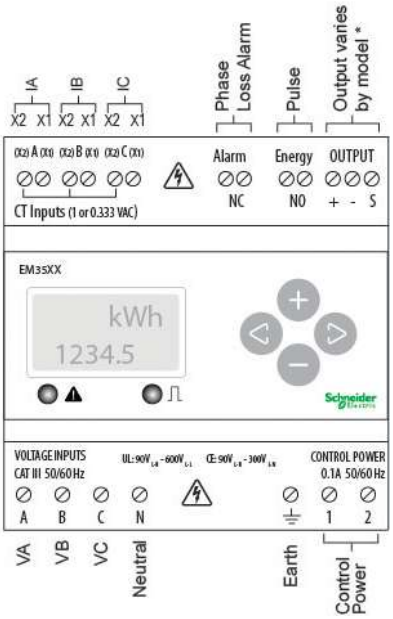

EM3502/EM355x parts and connection terminals

The data logging capability (EM3555 and EM3560) protects data in the event of a power failure. Modbus, pulse output, and phase alarms are all provided to suit a wide variety of applications. Additional pulse inputs on EM3560 provide an easy way to incorporate simple flow sensors to track gas, water, steam, or other energy forms using a BACnet system in addition to full monitoring of electrical energy.

EM35xxA (Pulse, Modbus, BACnet) models designed for use exclusively with Rogowski coil CTs where integrator and power supply for the CTs are built into the meter, resulting in fewer devices to purchase and faster to install. (Not recommended for high harmonic applications.)

The EM3555 models adds a bi-directional monitoring feature designed expressly for renewable energy applications, allowing measurement of power imported from the utility grid as well as power exported from the renewable energy source (e.g. solar panels). In this way, a facility administrator track all energy data, ensuring accuracy in billing and crediting.

- Features
  - All Models: A compact solution for panelboard monitoring
    - DIN rail mounting option; easy installation
    - ANSI 12.20 0.2% accuracy, IEC 62053-22 Class 0.2S for all 35xx models; great for cost allocation
    - ANSI C12.20 0.5% accuracy, IEC 62053-22 Class 0.5S for EM35xxA models
    - Real energy output and phase loss alarm output on EM3502(A), EM3550(A), and EM3555 models; one device serves multiple applications
    - 90-600 VAC; application versatility with fewer models to stock
    - Bright backlit LCD; easy visibility in dark enclosures
    - Data logging capability EM3555 & EM3560(A); safeguard during power failures
    - EM35xx models compatible with LVCTs from 5 A to 32000 A; wide range of service types
    - User-enabled password protection; prevents tampering
    - EM35xxA models are designed to work exclusively with Rogowski coil CTs 20-5000 A range. Eliminate site walks, save time and money. (Not recommended in high harmonic applications.)
    - System integration via Modbus EM355xx(A) or BACnet MS/TP EM356xx(A); convenient compatibility with existing systems
    - Native BACnet MS/TP support (no gateway) with serial rates up to 115.2 kbaud EM3560, EM3561, EM3560A, & EM3561A
  - EM3555 Models: An essential solution for Solar and other renewable energy applications
    - Bi-directional metering (4-quadrant); allows net metering
    - Data logging capability; ensures long term data retrieval
    - CSI approved

EM3500 series

PB105437

EM3500 in enclosure with door open

Selection guide

Electrical characteristics			
Inputs	Control Power, AC		50/60 Hz; 5 VA max.; 90 V min.; UL Maximums: 600 V L-L (347V L-N); CE Maximums: 300 V L-N (520V L-L)
	Control Power, DC		3W max.; UL and CE: 125 to 300 V DC (external DC current limiting required)
	Voltage Input		UL: 90 V L-N to 600 V L-L ; CE: 90 V L-N to 300 V L
	Current Input	Scaling	5 A to 32,000 A Non “A” models only 20 A to 5000 A for “A” models only
		Input Range	1/3V and 1V nominal LVCT (selectable) Non “A” models only Rogowski coil CTs only for “A” models
	Pulse Inputs (EM3560 & EM3560A)		Two sets of contact inputs to pulse accumulators
Accuracy	Real Power and Energy		0.2 % (ANSI C12.20, IEC 62053-22 Class 0.2S) EM35xx models only 0.5 % (ANSI C12.20, IEC 62053-22 Class 0.5S) EM35xxA models only
Outputs	All Models (EM3560, EM3560A, EM3561 & EM3561A)		Real Energy Pulse: N.O. static; Alarm contacts: N.C. static
	EM3502		Reactive energy pulse 30 VAC/DC
	EM3550, EM3555, EM3550A		RS-485 2-wire Modbus RTU (1200 baud to 38.4 kbaud)
	EM3560, EM3560A, EM3561, EM3561A		RS-485 2-wire BACnet MS/TP (9600 baud to 115.2 kbaud)
Mechanical characteristics			
Mounting			DIN Rail or 3-point screw mount
Environmental conditions			
Operating temperature Range			-30 °C to 70 °C
Storage Temperature Range			-40 °C to 85 °C
Humidity Range			<95 % RH non-condensing
Accessories			
NEMA 4x enclosure (EM3500-ENC, pictured)			
Split-core low voltage CTs (LVCTxx)			
Fuse kits (EFP1, EFP2, EFP3)			
Safety			
US and Canada (cULus) UL508 (open type device)/CSA 22.2 No. 14-05			
Europe (CE) EN61010-1:2001			

Feature selection

Commercial reference number	Model	Description
METSEEM3502	EM3502	Pulse out only
METSEEM3550	EM3550	Modbus - 2 quadrant
METSEEM3555	EM3555	Modbus - 4 quadrant with logging
METSEEM3560	EM3560	BACnet with logging
METSEEM3502A	EM3502A	Pulse Rope CT model
METSEEM3550A	EM3550A	Modbus Rope CT Model
METSEEM3560A	EM3560A	BACnet w/ logging Rope CT Model
METSEEM3561	EM3561	BACnet without logging
METSEEM3561A	EM3561A	BACnet without logging Rope CT Model

EM3500 series

EM3500 series	EM3502	EM3550	EM3560	EM3561	EM3555	EM3502A	EM3550A	EM3560A	EM3561A
Measurement Capability, Full Data Set									
Bi-directional Energy Measurements					■				
Power (3-phase total and per phase): Real (kW) Reactive (kVAR), and Apparent (kVA)	■	■	■	■	■	■	■	■	■
Power Factor: 3-phase average & per phase	■	■	■	■	■	■	■	■	■
Present Power Demand: Real (kW), Reactive (kVAR), and Apparent (kVA)	■	■	■	■	■	■	■	■	■
Import and Export totals of Present Power Demand: Real (kW), Reactive (kVAR), & Apparent (kVA)					■				
Peak Power Demand: Real (kW), Reactive (kVAR), and Apparent (kVA)	■	■	■	■	■	■	■	■	■
Current (3-phase average and per phase)	■	■	■	■	■	■	■	■	■
Voltage: Line-Line and Line-Neutral (3-phase average and per phase)	■	■	■	■	■	■	■	■	■
Frequency	■	■	■	■	■	■	■	■	■
ANSI C12.20 0.5 % accuracy, IEC 62053-22 Class 0.5S						■	■	■	■
ANSI C12.20 0.2 % accuracy, IEC 62053-22 Class 0.2S	■	■	■	■	■				
Accumulated Net Energy: Real (kWh), Reactive (kVARh), and Apparent (kVAh)	■	■	■	■	■	■	■	■	■
Accumulated Real Energy by phase (kWh)	■	■	■	■	■	■	■	■	■
Import and Export Accumulators of Real and Apparent Energy					■				
Reactive Energy Accumulators by Quadrant (3-phase total & per phase)					■				
Demand Interval Configuration: Fixed or Rolling Block	■	■	■	■	■	■	■	■	■
Demand Interval Configuration: External Sync to Comms		■	■	■	■		■	■	■
Data Logging (Store up to 60 days at 15-minute interval)									
Data Logging: 10 16-Bit Configurable (can include Date/Time) Data Buffers					■				
Data Logging: 3 Timestamped 32-Bit Configurable Data Buffers			■					■	
Outputs									
Alarm Output (N.C.)	■	■	■		■	■	■	■	
1 Pulse Output (N.O.)		■			■		■		
2 Pulse Outputs (N.O.)	■					■			
RS-485 Serial (Modbus RTU Protocol)		■			■		■		
RS-485 Serial (BACnet MS/TP Protocol)			■	■				■	■
LON FT Serial (LonTalk Protocol)									
Inputs									
2 Pulse Contact Accumulator Inputs				■					■
1 Pulse Contact Accumulator Input			■					■	

Display Screen Diagram

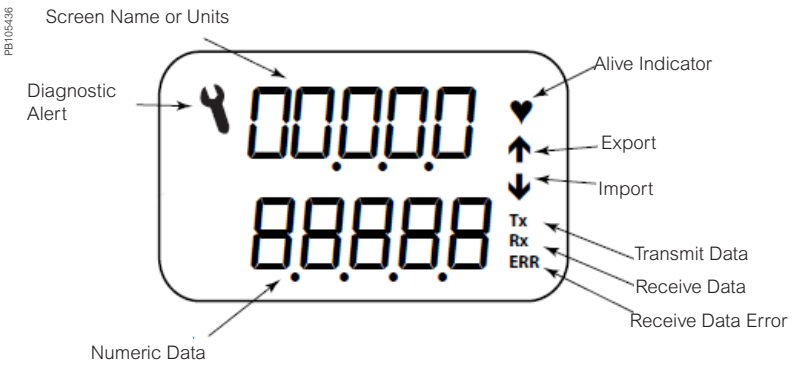

EM3500 series

EM3500 dimensions

PB105420

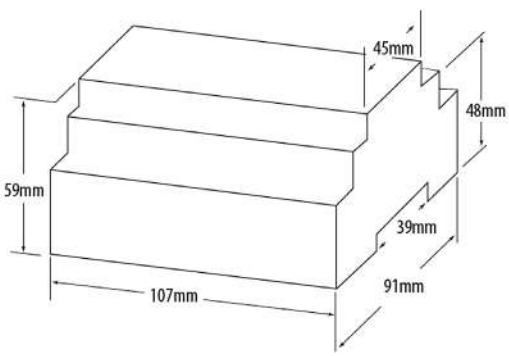

PB105421

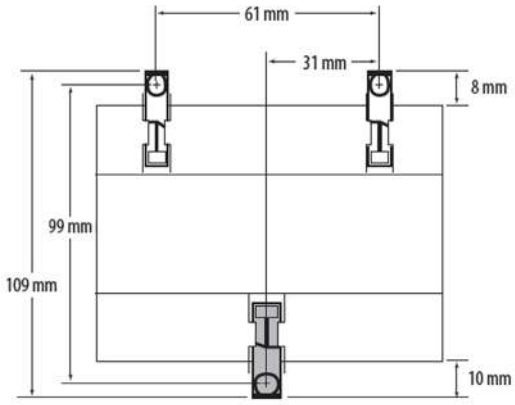

PB105439

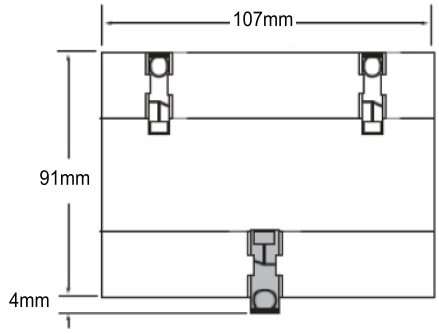

Bottom View (DIN Mount Option)

EM3500 connections

PB113728

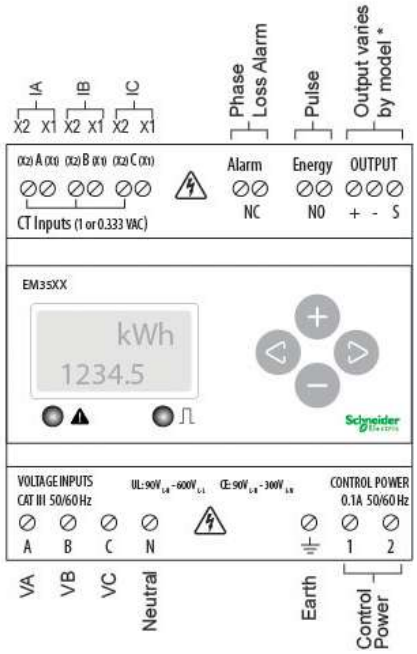

Two 5-character rows of display text.
Top row alphanumeric;
Bottom row numeric only

The red Alarm LED lights when any of the 3 phase voltages drop below the selected threshold.

The green Energy LED lights momentarily each time the Energy output pulse is active.

Please see EM3500 User Guide and EM3500 Installation Guide for safe and correct wiring and connection information.

PowerLogic™ EM4200 series

The PowerLogic™ EM4200 Series Enercept power and energy meters provide a unique solution for measuring energy data.

Designed for simplicity, the range includes two main offers: System Calibrated and Flex. The EM4200 System Calibrated offers system accuracy, pre-mounted Current Transducers, with a simple to quote and order single part number.

The EM4200 Flex offers the flexibility of a wide range of Current Transducers to match most applications, no matter how varied.

Applications

Capable of essential cost management:

- Energy monitoring in building automation systems
- Renewable energy monitoring
- Energy management
- Commercial sub-metering
- Industrial monitoring
- Accurate cost allocation

PB120808

METSEEM4235

The solution for

Markets that can benefit from a solution that includes PowerLogic™ EM4200 series:

- Buildings
- Industry
- Healthcare
- Data centre and networks
- Infrastructure

Benefits

System integrators' benefit

- Ease of integration
- Ease of setup
- Cost effectiveness

Panel builders' benefit

- Ease of installation
- Cost effectiveness
- Aesthetically pleasing
- Simplified ordering

End users' benefit

- Ease of use
- Precision metering & sub-billing
- Billing flexibility
- Comprehensive, consistent and superior performance

Competitive advantages

- High reliability with high system, or meter accuracy.
- Single part to order a metering chain (System Calibrated).
- Supports a large range of Sensor options. Flex can adapt to CTs from 50 to 5000 A, or different Rogowski coil sizes rated for up to 5000 A.
- Modbus and BACnet protocols along with uni-directional and bi-directional feature sets.
- Wide 90 to 480 V AC input range.
- DIN rail or screw-mount options, including mounting bracket for easy installation.
- Seamless integration with EcoStruxure™ Power Management software products.

Power management solutions

Schneider Electric provides innovative power management solutions to increase your energy efficiency and cost savings, maximise electrical network reliability and availability, and optimise electrical asset performance.

Conformity of standards

- CAN/CSA C22.2 No. 61010-1-12
- EN 61000-6-2
- EN 61000-6-4 Class A
- EN 61010-1
- EN 61326-1 Class A
- FCC 47 CFR Part 15 Class A
- UL 61010-1

Accuracy standards

Flex models

- ANSI C12.20-2015 Class 0.2
- IEC 62053-24 Class 1S

  When used with 1/3 V CT (Meter accuracy)
- IEC 62053-22 Class 0.2S 0.2%

  When used with Rogowskil Coils (Meter accuracy)
- IEC 62053-22 Class 0.5S

System calibrated

- ANSI C12.1, 1%
- IEC 62053-22 Class 1S 1%

EM4200 series

PB120809

EM4200 Flex Power Meter

PB119361

EM4200 System Calibrated with calibrated Rogowski coils

The EM4200 meter series provides a highly flexible retrofit option ideal when adding metering to an existing building, or to integrate in an OEM solution. Designed to simplify the ordering process, the meter is declined in 2 major options:

System Calibrated offers the simplest way to order, deploy and meet requirements. The meter comes with pre-mounted Current Transducers (CT), or Rogowski Coils. A single reference provides a System calibrated accuracy meter with a 100, 200, 400A CT, or 5,000A Rogowski coil.

Flex offers the flexibility required when the CT, or Rogowksi coil, rating or size needs to further adapt to the site. CTs can range from 50 to 5,000A and Rogowski coils can be different sizes with a 5,000 A rating.

- General features
  - Uni and Bi-Directional metering to support to power generation application.
  - Data logging.
  - Modbus and BACnet serial communication with auto-protocol and baud rate detection.
  - Configurable with or without power.
  - DIN rail or screw-mount options, including mounting brackets for easy installation.
  - Seamless integration in Power Monitoring Operations and Power SCADA Operations.
  - Wide input range of 90 to 480 V AC.
  - Approvals: UL 61010-1, IEC/EN 61010-1
- System calibrated features
  - Three factory mounted and calibrated Current Transducers (100, 200 or 400 A), or Rogowski coils (5,000 A, 12” or 18” (304.8 mm or 457.2 mm)). Simplifies ordering and commissioning.
  - ANSI version only: Fuse packs factory mounted.
  - System Accuracy from 1% to 100% load:
    - Real Power and Energy: ANSI C12.1 1%, IEC 62053-22 Class 1S, 1%.
    - Reactive Power and Energy: IEC 62053-24 Class 1, 1%
- Flex features
  - Supports generic 1/3 V CTs from 50 to 5,000 A.
    Or 1/3 V 5,000 A Rogowski coils.
  - ANSI: Optional fuse packs available.
  - Meter Accuracy from 1% to 100% of load (CT mode):
    - Real Power and Energy: ANSI C12.20 0.2%,
      IEC 62053-22 Class 0.2S, 0.2%.
    - Reactive Power and Energy: IEC 62053-24 Class 1, 1%.

EM4200 series

EM4200 series selection guide

Advantage	EM4200 Flex		EM4200 System Calibrated			
	METSEEM4235	METSEEM4236	METSEEM4235Axx	METSEEM4236Axx	METSEEM4235Bxx	METSEEM4236Bxx
General						
Market	IEC	ANSI	IEC	ANSI	IEC	ANSI
Single part to order			Yes	Yes	Yes	Yes
Factory mounted CTs/Rogowski coil			Yes	Yes	Yes	Yes
CT						
Rating	50 to 5000 A user choice	50 to 5000 A user choice	Three		Three 100, 200 or 400 A supplied	Three 100, 200 or 400 A supplied
Type	1/3 V Solid or Split Core	1/3 V Solid or Split Core			Split Core	Split Core
Rogowski Coil						
Rating	5000 A	5000 A	5000 A supplied	Three 5000 A supplied		
Type						
Size	User choice	User choice	12" or 18"	12" or 18"		
Accuracy						
Meter	0.2% with CTs 0.5% with Rogowski Coil	0.2% with CTs 0.5% with Rogowski Coil				
System			1%	1%	1%	1%
Fuse pack						
	Option sold separately	Option sold separately		Factory mounted		Factory mounted
Communication						
	BACnet MS/TP Modbus RTU over RS485	BACnet MS/TP Modbus RTU over RS485	BACnet MS/TP Modbus RTU over RS485	BACnet MS/TP Modbus RTU over RS485	BACnet MS/TP Modbus RTU over RS485	BACnet MS/TP Modbus RTU over RS485

EM4200 parts descriptions and advantages

EM4200 Flex meter

PB120811

EM4200 System calibrated

PB120812

EM4200 series

Electrical characteristics		EM4200 Flex	EM4200 System calibrated
Input-voltage characteristics	Inputs	V1, V2, V3, Vn	V1, V2, V3, Vn
	Measured voltage	90 - 277 V AC L-N UL max 480 V L-L CE max 300 V L-N	90 - 277 V AC L-N UL max 480 V L-L CE max 300 V L-N
	Frequency range	50/60 Hz	50/60 Hz
Mechanical characteristics			
Weight		Approx 1/0 kg (2.2 lb)	1.4 to 2.2 Kg (3.10 to 4.85 lb) (model dependent)
Dimensions		46.63 x 35.81 x 152.36 mm (1.84 x 1.41 x 6.0 in)	46.63 x 35.81 x 152.36 mm (1.84 x 1.41 x 6.0 in) (Meter alone), CT/ Rogowski size varies with model
Environmental conditions			
Operating temperature		-30 °C to 70 °C (-22 to 158 °F)	0 to 70 °C (32 to 158 °F)
Storage temperature		-40 °C to 85 °C (-40 to 185 °F)	With Split Core CTs: -40 to 85 °C (-40 to 185 °F) With Rogowski Coils: -40 to 70 °C (-40 to 158 °F))
Humidity rating		<95 % RH non-condensing	<95 % RH non-condensing
Enclosure		Indoor use only - not suitable for wet locations	Indoor use only - not suitable for wet locations
Altitude		3000 m (10,000 ft)	3000 m (10,000 ft)
Pollution degree		2	2
Electromagnetic compatibility			
Compliance			
Certified to IEC/BTL		CAN/CSA C22.2 No. 61010-1-12	CAN/CSA C22.2 No. 61010-1-12
		EN 61000-6-2	EN 61000-6-2
		EN 61000-6-4 Class A	EN 61000-6-4 Class A
		EN 61010-1	EN 61010-1
		EN 61326-1 Class A	EN 61326-1 Class A
		FCC 47 CFR Part 15 Class A	FCC 47 CFR Part 15 Class A
		UL 61010-1	UL 61010-1
Accuracy			
Accuracy standards		ANSI C12.20-2015 Class 0.2	ANSI C12.20-2015 Class 0.2
		IEC 62053-24 Class 1S	IEC 62053-24 Class 1S
		ANSI C12.20 2015 Class 0.2 IEC 62053-24 Class 1S When used with 1/3 V CT (Meter accuracy) IEC 62053-22 Class 0.2S 0.2% When used with Rogowski coils (Meter accuracy) IEC 62053-22 Class 0.5S	ANSI C12.1 1% IEC 62053-21 Class 1S 1% IEC 62053-24 Class 1 1%

Commercial Reference Numbers

Market	Commercial Reference	Rating	CTR type	CT size	Fuse pack	CT lead length	System calibrated
IEC	**METSEEM4235**	User choice					
IEC	**METSEEM4235A12**	Up to 5000 A (3 coils supplied)	Rogowski	12” (304.8 mm)		6 ft (1828.8 mm)	Yes
IEC	**METSEEM4235A18**	Up to 5000 A (3 coils supplied)	Rogowski	18” (457.2 mm)		6 ft (1828.8 mm)	Yes
IEC	**METSEEM4235B101**	100 A (3 CTs supplied)	Split core			6 ft (1828.8 mm)	Yes
IEC	**METSEEM4235B201**	200 A (3 CTs supplied)	Split core			6 ft (1828.8 mm)	Yes
IEC	**METSEEM4235B401**	400 A (3 CTs supplied)	Split core			6 ft (1828.8 mm)	Yes
ANSI	**METSEEM4236**	User choice			Option		
ANSI	**METSEEM4236A12**	Up to 5000 A (3 coils supplied)	Rogowski	12” (304.8 mm)	Yes	6 ft (1828.8 mm)	Yes
ANSI	**METSEEM4236A18**	Up to 5000 A (3 coils supplied)	Rogowski	18” (457.2 mm)	Yes	6 ft (1828.8 mm)	Yes
ANSI	**METSEEM4236B101**	100 A (3 CTs supplied)	Split core		Yes	6 ft (1828.8 mm)	Yes
ANSI	**METSEEM4236B201**	200 A (3 CTs supplied)	Split core		Yes	6 ft (1828.8 mm)	Yes
ANSI	**METSEEM4236B401**	400 A (3 CTs supplied)	Split core		Yes	6 ft (1828.8 mm)	Yes

EM4200 series

EM4200 dimensions

PB115452

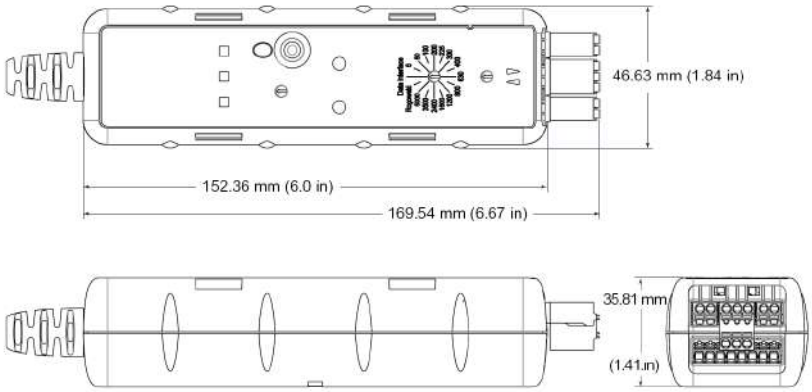

PB115453

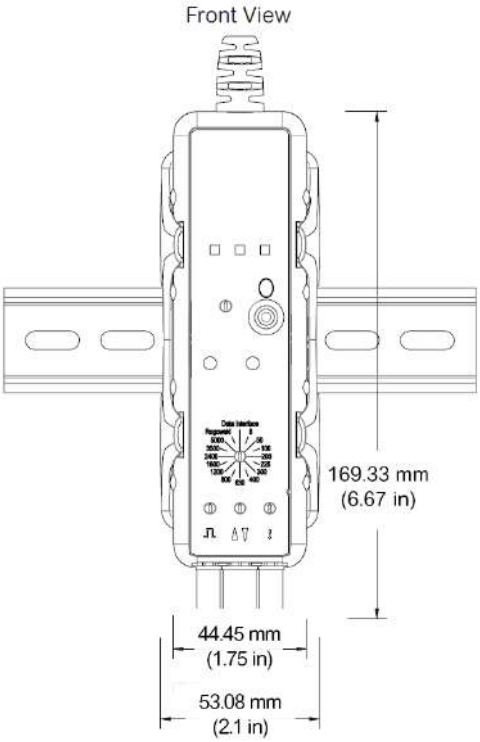

PB115454

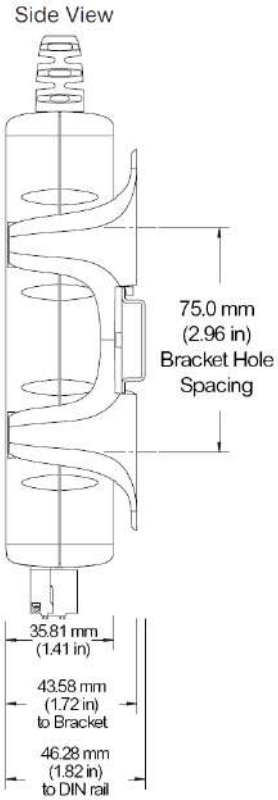

Insulation Monitoring Devices

An IT earthing system allows your electrical distribution system to continually operate, even in the presence of an insulation fault, without endangering people or property. Required as part of an IT earthing system, an insulation monitoring device (IMD) detects the initial fault so you can make repairs before a second fault occurs, which could trigger protective devices and halt operations.

PB118026

PB118027

PB118026

Insulation Monitoring of IT / Ungrounded Networks

Unlike the TT or TN earthing systems, the neutral of the transformer is isolated from the ground for an IT earthing system (also called Ungrounded system).

This is applicable to both Low Voltage systems (up to 1000VAC, 1500VDC) and medium Voltage (up to 63 kV on IMDs only)

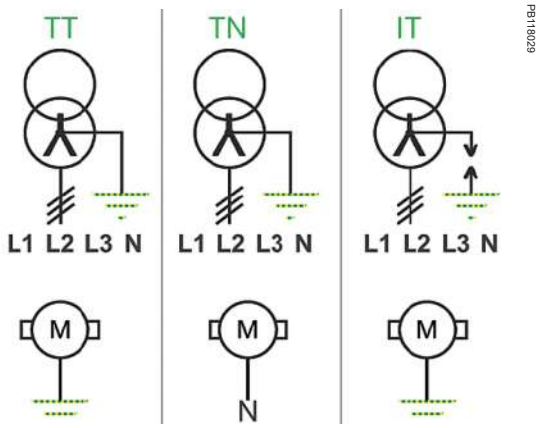

The main interest of IT systems is that in case of one insulation fault.

- Enhanced continuity of service of the network (no trip if there is one insulation fault on the network).
- Reduced risk of electric shock.
- Reduced risk of fire or explosion (low faulty current in case of insulation fault).
- Reduced stress on the network and increased equipment life (low faulty current in case of insulation fault).

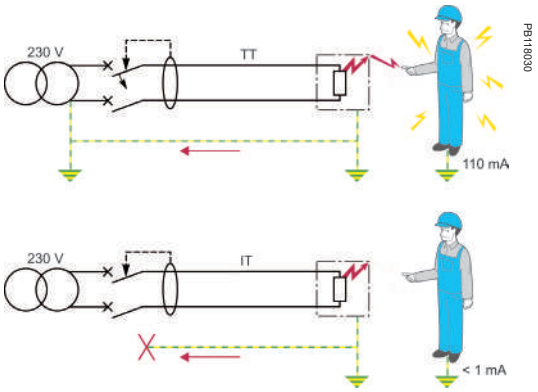

- In TT or TN systems, in a situation with an insulation fault, the faulty current will not be negligible and will cause trip of the protections.
- For this reason, Insulation Monitoring Devices are used on IT networks in order to detect a first insulation fault so that the fault can be repaired; hence avoiding situations with several insulation faults and maintaining the continuity of service on the network.
- Using an Insulation Fault Locator (IFL) allows the operator to locate the fault in multiple feeders installations.

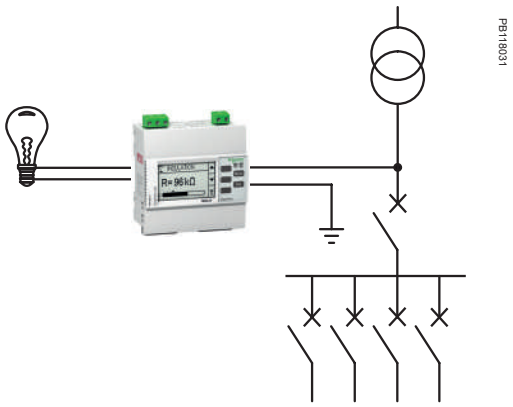

Example of simple insulation monitoring system

The Vigilohm catalog offers a range of products suitable for these various applications, from the simplest insulation monitoring systems to the most advanced ones, including individual insulation monitoring per feeder and communication with supervision.

Insulation Monitoring of IT / Ungrounded Networks

IT earthing systems are used for applications requiring continuity of service, such as:

- Healthcare: critical rooms in medical premises such as operating theaters, intensive care units, recovery rooms.
- Industry: critical processes in cement, steel, aluminium, oil and gas, chemical factories, food processing, car manufacturing, (painting area, other...) water, and waste water.
- Infrastructure: control tower and take-off path in airports, railways, seaports, tunnels, and signaling networks in rail.
- Utilities: power plants and control command systems.
- Photovoltaic: solar farms.
- Marine: electrical distribution of any type of ship.
- DC applications such as electrical vehicle charging stations.
- Medium Voltage: cable monitoring, distribution in industrial sites, MV loads-transformers and motors.

Vigilohm Range Overview for Low Voltage Networks, Except Healthcare

Product		LV	MV
IMD		IMD-IM9 IMD-IM10 IMD-IM20 IMD-IM400 IMDIM400L * IMD-IM400C **	IMDIM400THR IMDIM400LTHR *
LV > 480 V AC		IM20 + IM20-1700 IM400 + IM400-1700 IM400C+ IM400-1700C IMD with Fault Locator IM400 / 400L /400C + PHT1000 and IFL12MC series + IFL12VA1T	1460872 (P1N)
IFL		IMDIFL12 IMDIFL12L * IMDIFL12C *** IMDIFL12MC *** IMDIFL12LMC * IMDIFL12MCT ****	None
TOROIDS		50437 (TA30) 50438 (PA50) 50439 (IA80) 50440 (MA120) 50441 (SA200) 50442 (GA300) 50420 (TOA80) 50421 (TOA120)	None
HRG, Cardew Mobile Locators		50278, (XRM) 50282, (XGR) 50494,498, 499 (Open CTs) 50159 (ZX Imp -HRG) 50170, 171, 172, 183 (Cardew)	Voltage Transformers 03811728N0 (6.6 kV) 03811746N0 (22 kV) 03811749N0 (33 kV)

L* Power supply 24-48 V AC/DC
C ** Tropicalized (conformal coated)
C *** Communication
MC *** Measurement & Communication
MCT **** Measurement & Communication & Tropicalized (conformal coated)

Vigilohm Range Overview for Low Voltage Networks, Except Healthcare

A simple range to meet your needs

Industrial networks

Monitoring and Control

Power Monitoring & SCADA system

Communication and Simple Monitoring

Gateway, Data logger & Web Server

Insulation Monitoring Devices

Identification of a leakage to ground in the complete system

Insulation Fault Locators

Identification of the faulty feeder

Toroids

Used along with the Fault Locators

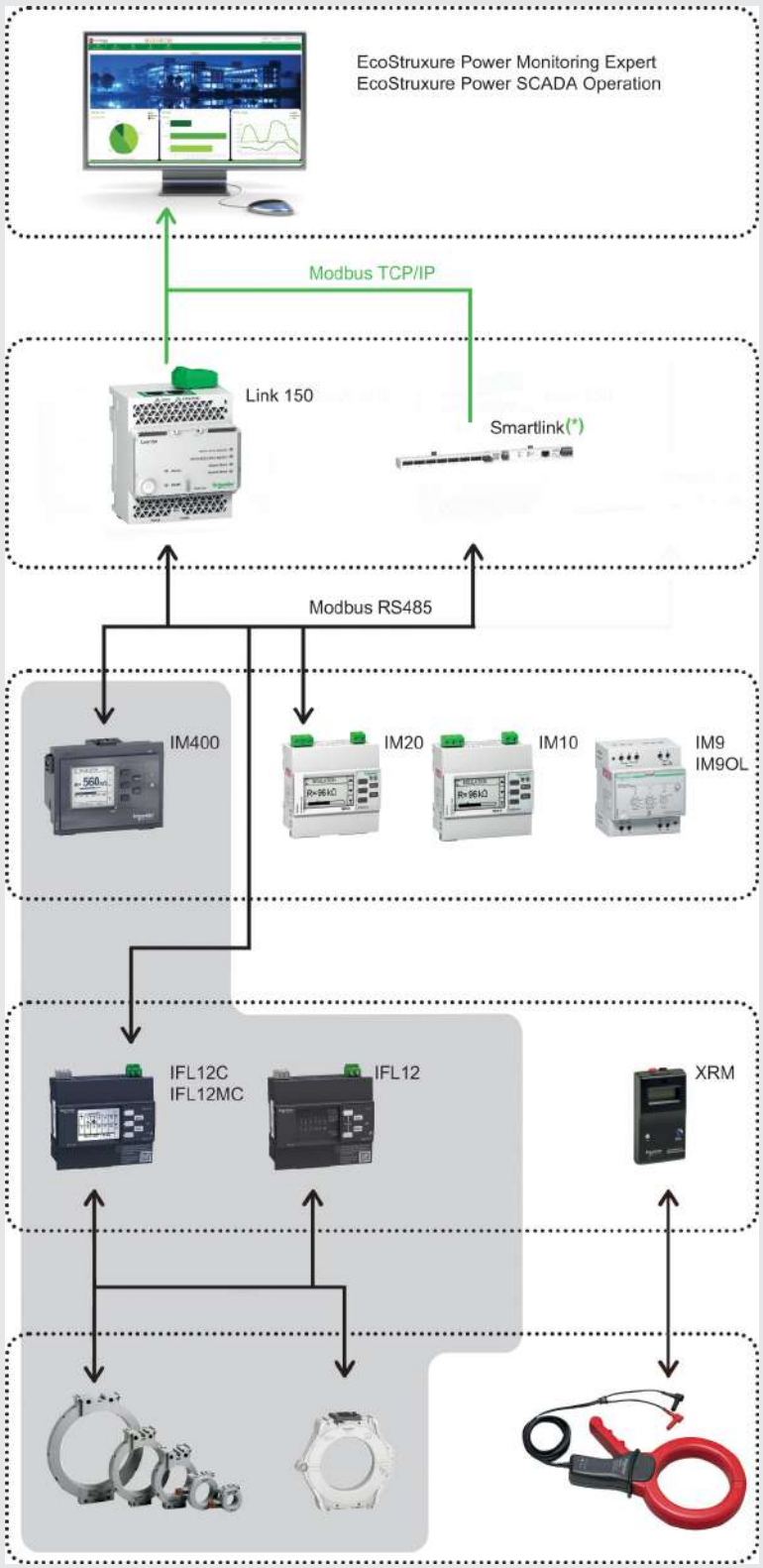

Vigilohm Range Overview for Medium Voltage Networks

A simple range to meet your needs

Industrial networks

Monitoring and Control

Power Monitoring & SCADA system

Communication and Simple Monitoring

Gateway, Data logger & Web Server

Insulation Monitoring Devices

Identification of a leakage to ground in the complete system

Voltage adaptor

Voltage transformer

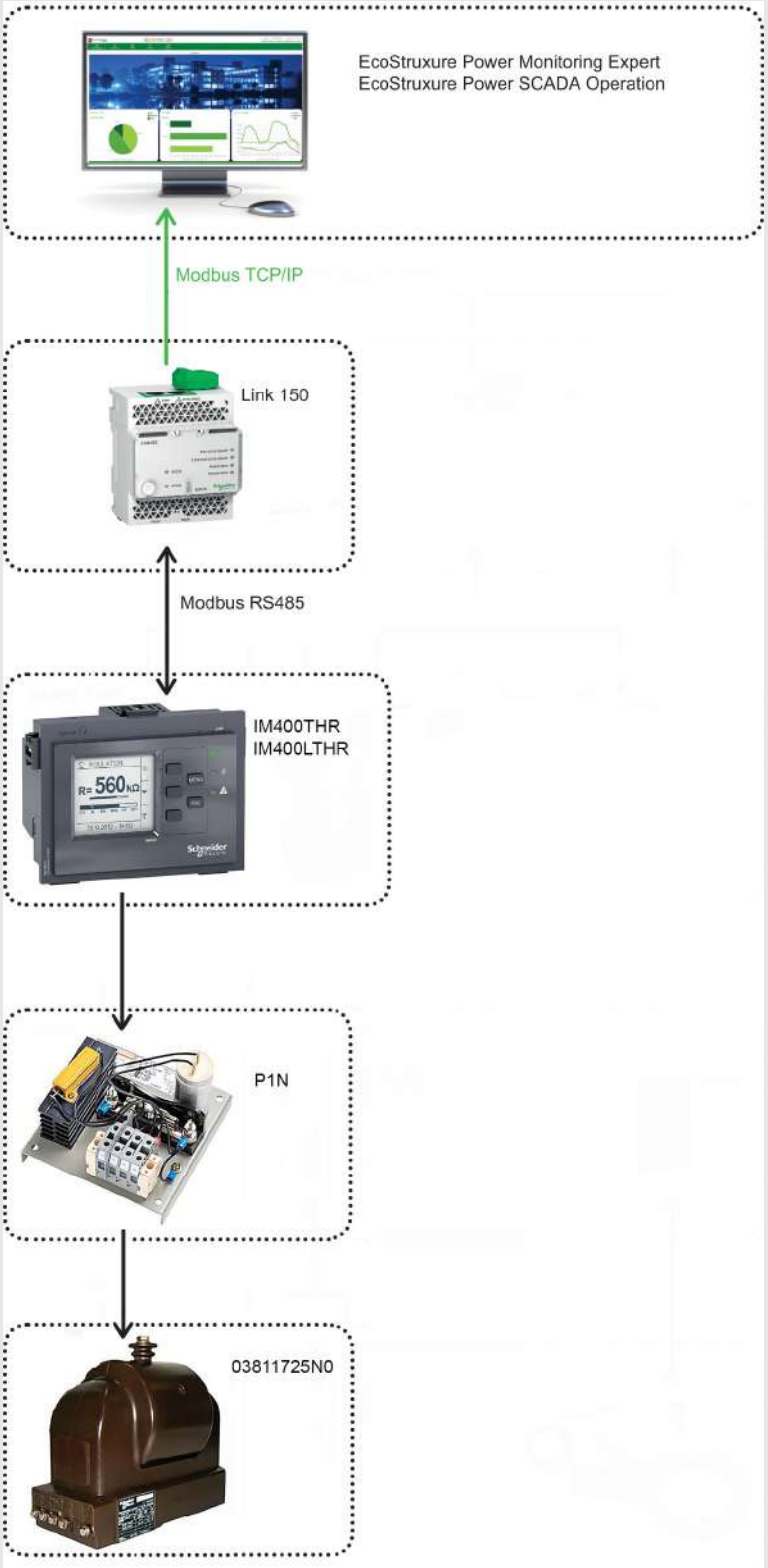

Vigilohm Range Overview for Healthcare

Example of Healthcare network monitored by Vigilohm Insulation Monitoring Devices in compliance with IEC 60364-7-710.

The same hospital may have differing architectures, as shown below.

Operating Theater 1 uses Link 150 to send data to the supervision system.
Operating Theater 2 uses Smartlink to send data to the supervision system, knowing that Smartlink can also collect data from the circuit breaker, tripped or not.

PB118032

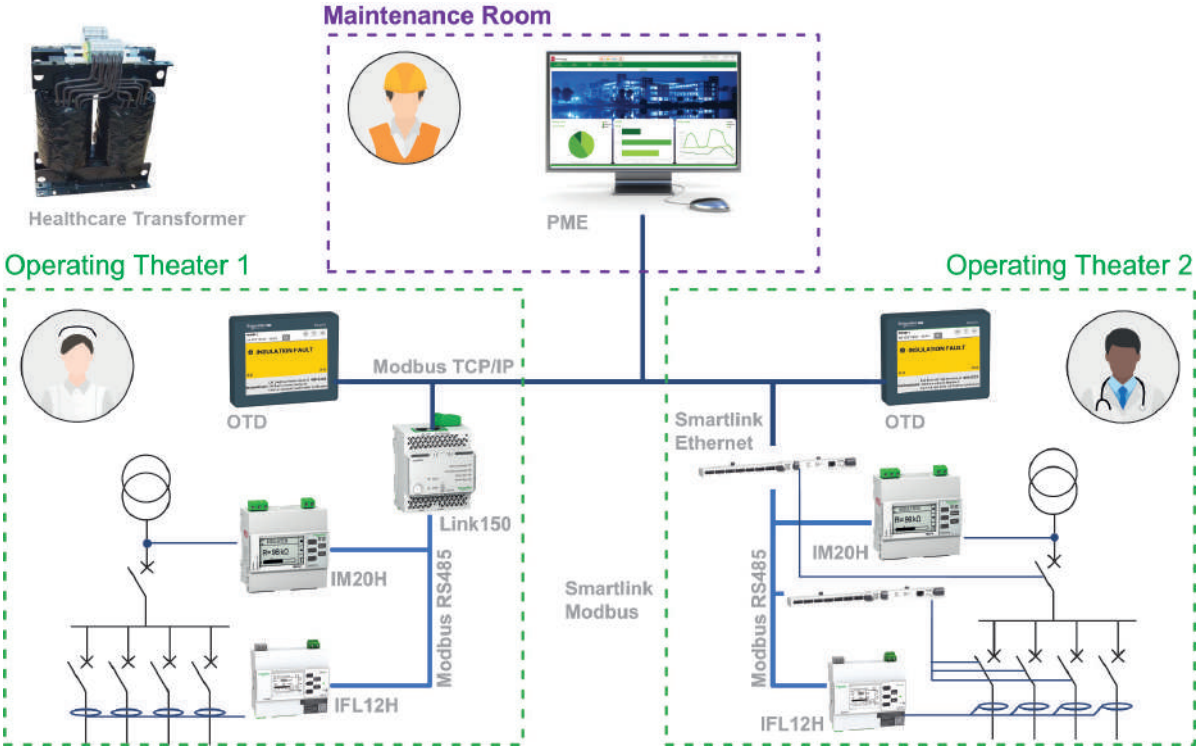

Medical staff is informed of electrical faults in the operating theater room through the local HMI

Technical staff is informed of any fault in the various operating theaters via a supervision system such as EcoStruxure Power Monitoring Expert.

This range of products, dedicated to Medical premises, meets requirements from IEC61364-7-710.

IMD and IFL are also "MED" certified, as they meet their product standard:

- IEC61557-8, annex A & B for IMDs and the remote panel
- IEC61557-9, annexA for IFLs

Commercial reference numbers required for the healthcare application:	
Isolation Transformer	IMD-IT-S63-H,or IMD-IT-S80-H, or IMD-IT-S100-H
IMDs	IMD-IM10-H, or IMDIM15H, or IMD-IM20/-H
Remote panel	50168 (HRP) or IMDLRDH
Locator	IMDIFL12H
Toroids	with IM20-H: METSECT5CC004 or METSECT5CC005 with IFL: 50437 (TA30)
Gateway Link150	Link150

Vigilohm Range Commercial Reference Numbers

Commercial ref. no.	Description
Vigilohm Insulation Monitoring	
50159	ZX impedance
50168	HOSPITAL REMOTE PANEL
50169	CARDEW Holder
50170	CARDEW 250V CA Surge arestor
50171	CARDEW 440V CA Surge arestor
50172	CARDEW 660V CA Surge arestor
50183	CARDEW 1000V CA Surge arestor
50248	PHT1000
50278	XRM
50281	XGR 115-127VCA
50282	XGR 220-240VCA
50283	XGR 380-415VCA
50420	TOA80 open toroid
50421	TOA120 open toroid
50437	TA30 toroid
50438	PA50 toroid
50439	IA80 toroid
50440	MA120 toroid
50441	SA200 toroid
50442	GA300 toroid
50494	XP15 Open CT for XRM
50498	XP50 Open CT for XRM
50499	XP100 Open CT for XRM
1460872	Voltage Adaptor P1N
IMDCP100	Current Probe 100mm
IMDCP15	Current Probe 15mm
IMDCP50	Current Probe 50mm
IMDIFL12	Ins Fault locator Entry
IMDIFL12C	Ins Fault locator Entry Com
IMDIFL12H	Ins Fault locator HC

Commercial ref. no.	Description
IMDIFL12L	Ins Fault locator Entry 24-48VDC
IMDIFL12LMC	Ins Fault locator Adv 24-48VDC
IMDIFL12MC	Ins Fault locator Adv
IMDIFL12MCT	Ins Fault locator Adv Tropic
IMDIFL12VA1T	Voltage Adaptor for IFL12MC series_1000V
IMDIFLK1	Mobile Ins Fault locator 1 feeder
IMDIFLK12	Mobile Ins Fault locator 12 feeders
IMD-IM10	IM10
IMD-IM10-H	IM10 H
IMDIM15H	IM15 H
IMD-IM20	IM20
IMD-IM20-1700	Voltage Adaptor for IM20
IMD-IM20-H	IM20 H
IMD-IM400	IM400
IMD-IM400-1700	Voltage adaptor for IM400
IMD-IM400-1700C	Voltage adaptor for IM400 Conformal coated
IMD-IM400C	IM400C
IMDIM400L	IM400L
IMDIM400LTHR	IM400LTHR
IMDIM400THR	IM400THR
IMD-IM400VA2	Voltage adaptor for PV application Coated
IMD-IM9	IM9
IMD-IM9-OL	IM9OL
IMD-IT-S63-H	Single Phase, Isolated Transformer, 6,3KVA
IMD-IT-S80-H	Single Phase, Isolated Transformer, 8KVA
IMD-IT-S100-H	Single Phase, Isolated Transformer, 10KVA
IMDLRDH	Remote Display Hospital

Please see your Schneider Electric representative for complete ordering information.

EcoStruxure™ Panel Server

IoT for an intelligent power network

The EcoStruxure™ Panel Server is the next generation of gateway, providing a seamless connection of wired or unwired smart IoT devices to your edge control software or cloud-based applications and analytics. It is a foundational enabler for Schneider Electric EcoStruxure™ solutions.

Electrical safety

Panel Server is an integral part of Schneider Electric's continuous thermal monitoring application, helping reduce risk of electrical fires, increase people and assets protection. Implement the thermal monitoring of your electrical panel by connecting thermal and heat sensors to your Panel Server.

Power availability

Electrical distribution monitoring and power event analysis help avoid unplanned downtime caused by electrical failure. Panel Server collects real-time data and alarms, presenting information through embedded webpages, making it available to edge control software or cloud-based applications and analytics for electrical system diagnostics. Use embedded webpages for first-level monitoring or monitor from your edge or cloud control system.

Optimize energy efficiency

Improve your facility's energy efficiency and reduce energy consumption with energy usage analysis and performance tracking. Panel Server collects and shares energy data to help achieve your energy conservation initiatives. It is part of an energy data management system certified for compliance with ISO 50001, 50002, 50006 requirements.

Cybersecurity

Guarding your electrical assets and systems against cyber attacks is vital. Discover the enhanced cybersecurity benefits of Panel Server and its IEC62443-4-1 compliant development lifecycle. Explore its cybersecurity features through a dedicated guide, and discover how Panel Server empowers you to retrieve security logs, providing valuable insights into system security and activity.

DB410992

EcoStruxure Panel Server gives you access to the information you need to protect, maximize and optimize your power system.

- Help keep people and assets safer
- Maximize power availability
- Optimize energy efficiency
- Improve cybersecurity

All-in-one gateway

- Separates your OT network from your IT network
- Wireless data concentrator
- Modbus RS485 to Modbus TCP/IP
- Supports multiple Ethernet connections for serving information to edge control software and cloud applications

Simple commissioning

- EcoStruxure™ Power Commission software
- Device auto discovery
- Generation of acceptance reports to validate gateway configuration
- Commission via WiFi

Intuitive operation

- User-friendly webpages offer first-level monitoring
- Contextualized data and operational insights
- Simple alarm setup for email notification
- Standardized IEC 62974-1 compliant datalogger and energy server

Architecture overview

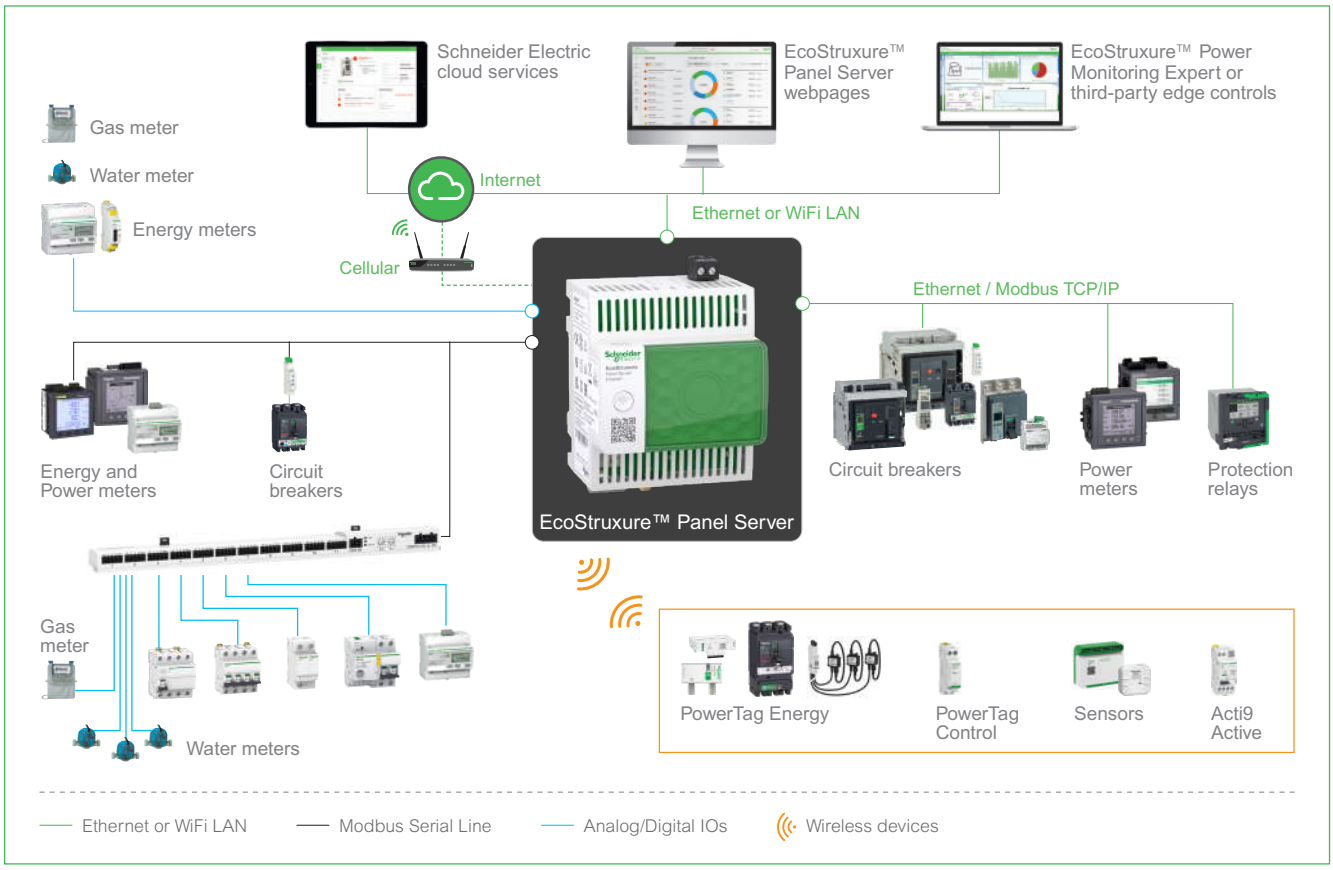

Panel Server Entry

DB410978

Panel Server Entry - Front ISO view

Standards & certifications

- IEC 61010-1
- IEC 61010-2-201
- UL 61010-1
- UL 61010-2-201
- IEC 62974-1
- ETSI EN 301 489-1 V.2.2.3
- ETSI EN 301 489-17 V.3.2.4
- IEC 61326-1
- IEC 62974-1
- EN50581
- EN 62321
- EN 62474
- ETSI EN 300 328 V2.2.2

Compatible with a large set of wireless sensors, PowerTag Energy, Heat Tag, and others. PAS400 is the perfect fit for small networks or installations where space is a challenge.

Functions

- Optimized gateway to retrieve data from your wireless devices.
- Connect to your monitoring and control software such as EcoStruxure™ Power Monitoring Expert, EcoStruxure™ Power Operation or to your Building Management System.
- Connect to Schneider Electric cloud applications such as EcoStruxure™ Energy Hub or Asset Advisor.
- Ease of commissioning with EcoStruxure™ Power Commission software or directly through the Panel Server webpages, enabling device plug-and-play and auto-discovery features.
- Ease of operation with user friendly embedded webpages, and data contextualization for more relevant analytics.

Main features

- Power Supply 110...277 V AC/DC
- Designed to match with electrical switchboard environment (temperature, humidity electromagnetic compatibility)
- One Ethernet 10Base-T/100Base-T port
- Wi-Fi
- IEEE 802.15.4 wireless communication
- Modbus TCP/IP server
- Support of HTTPS, NTP, SNTP, DHCP client with proxy management
- Wireless devices concentrator to Modbus TCP/IP
- Designed through a Secured Development Life Cycle in accordance to IEC 62443-4-1
- Commissioning through EcoStruxure™ Power Commission or through Embedded Web-Pages
- Speed-up commissioning through device list import and configuration export to the monitoring software
- Fully integrated in Cybersecurity Admin Expert tool to facilitate the management of cybersecurity in your electrical network's (Security features such as enabling/disabling communication means).
- Embedded web server for real-time measurement visualization, and power consumption
- Real-time alarm display

Comm. Reference	Description
PAS400	Panel Server Entry 110...277 V AC/DC

** Commercialised in Q3, 2022*

Panel Server Entry

Panel Server Entry technical specification

Technical data		EcoStruxure™ Panel Server Entry
Commercial Reference		PAS400
Power Supply		
Voltage		110...277 V AC/DC
Tolerance		± 10%
Frequency		45...65 Hz
Maximum consumption		3 W, 10 VA
Ethernet & Wi-Fi		
Ethernet 10/100base T	Number of Ports	Single RJ45 Port
	PoE 802.3af & 802.3at Class 0	NA
Wi-Fi	Supported Frequency	2.4 & 5 GHz
TCP/IP		Yes
IP V4/IP V6		Yes
DPWS		Yes
DHCP	Client	Yes
	Server (Separate Nework)	No
Modbus TCP/IP Server	Max. number of client connection	64
Modbus TCP/IP Client	Max. number of Modbus TCP/IP devices	NA
Schneider Electric Cloud Services		Yes
HTTPS		Yes
External Wi-Fi/Antenna		No
Wireless Devices (IEEE 802.15.4)		
Number of devices	Total for mixed network	20 devices
	PowerTag Energy & Easergy TH110/CL110	20 devices
	Other type of devices (+1)	20 devices
External IEEE 802.15.4 Antenna		No
Serial Ports		
Modbus RS485 Client	Max. number of devices w/o repeater	NA
	Max. number of devices with repeater	NA
	Maximum Length	NA
	Baud Rate	NA
Functionality		
Data Buffering for cloud applications		1 month
Data Logger and Web-Server	Data Logging	No
	Event logging	Yes (+2)
	Simple Monitoring Web-Pages	Yes
	Monitoring Web-Pages with historical data	No
Time Management	RTC (with battery)	Yes
	TimeUpdate (NTP & SNTP)	Yes
Digital inputs		
Two DI	WAGES & Dry-Contact	No
Environmental		
Protection Degree	Front Face	IP40
	Others	IP20
Overvoltage Category		OVC III
Polution Degree		2
Temperature	Operation	-25...+60 °C
	Storage	-40...+85 °C
Altitude Max.		< 2000 m
Relative Humidity		5...95 %
Mechanical		
Form factor		Acti9
Installation		Din Rail
Width		54 mm
Weight		163 g
Standard & Certification		
Certifications		CE, CULus, CB, RCM, UKCA, FCC, IC, RF, Marine certification (DNV)
Standards		EN/ IEC 61010-1, EN/IEC 61010-2-201, UL 61010-1, UL 61010-2-201, CSA C22.2 No 61010-1-12, CAN/CSA C22.2 No 61010-2-201, EN IEC 62974-1, EN/IEC 61326-1, ETSI EN 301-489-1, ETSI EN 301-489-17, ETSI EN 300-328, IEEE 802.15.4, IEEE 802.11b/g/n, IEEE 802.3 af/at, EN 301-893, 47 CFR FCC Part 15, Subpart B, Class A, EN IEC 62311, ANSI C63, IACS UR E10, DNVGL-CG-0339

(+1) *Consult the User Manual or other documentations to check the limit applicable to your wireless device.*

(+2) *Lower limits may apply depending on the firmware version, the serial line length, and the type of device(s). Consult the User Manual, Release Notes or other documentations.*

Panel Server Entry

Panel Server Entry dimensions

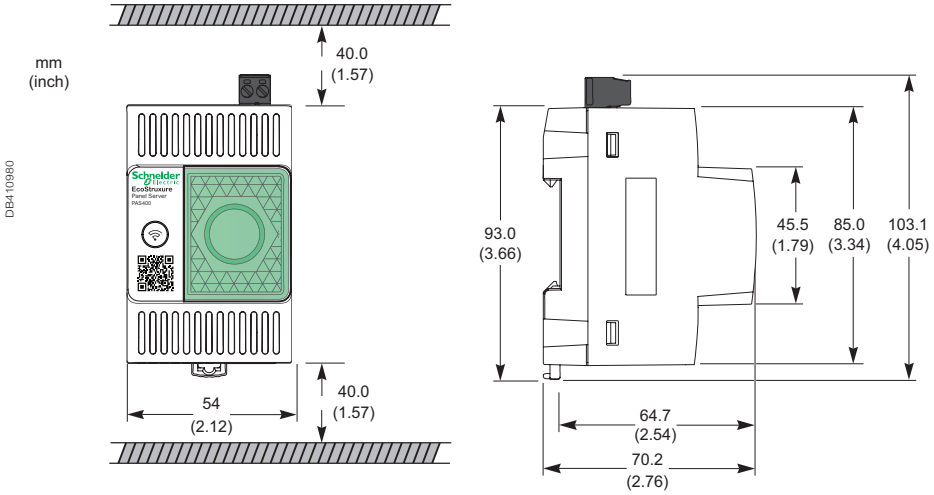

Panel Server Entry physical descriptions

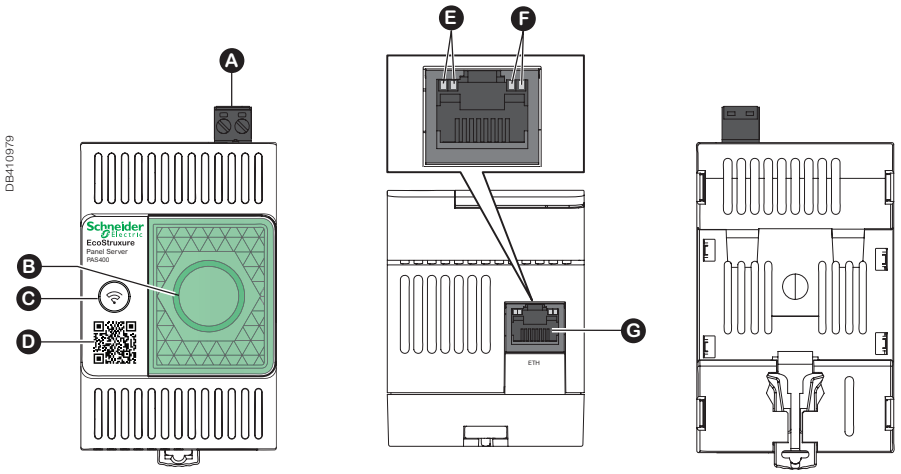

- A Power supply terminal block
- B EcoStruxure™ Panel Server status LED
- C Restart button
- D QR code to product information
- E Ethernet LED 1: Speed
- F Ethernet LED 2: Activity
- G Ethernet communication port

*Please see the appropriate **Installation Guide** for accurate and complete information on the installation of this product.*

Panel Server Universal

Panel Server Universal - Front ISO view

Standards & certifications

- IEC 61010-1
- IEC 61010-2-201
- UL 61010-1
- UL 61010-2-201
- IEC 62974-1
- ETSI EN 301 489-1 V.2.2.3
- ETSI EN 301 489-17 V.3.2.4
- IEC 61326-1
- IEC 62974-1
- EN50581
- EN 62321
- EN 62474
- ETSI EN 300 328 V2.2.2

Comm. Reference	Description
PAS600	Panel Server Universal with 110...277 V AC/DC power supply
PAS600L	Panel Server Universal with 24 V DC power supply
PAS600LWD	Wired by Design Panel Server Universal with 24 V DC Power
PAS600PWD	Wired by Design Panel Server Universal with PoE power supply

All-in-one and Wired by Design Panel Server

- The All-in-one Panel Server Universal is designed to retrieve data from wireless, Modbus, and Ethernet based protocols to offer versatility and adaptability.
- Panel Server Universal Wired by Design is designed for specific cybersecure sensitive installations, dedicated to wired communication protocols (Modbus, Ethernet) and PAS embedded digital inputs.(PAS600LWD).

Functions

- Connect to your monitoring and control software such as EcoStruxure™ Power Monitoring Expert, EcoStruxure™ Power Operation or to your Building Management System.
- Connect to Schneider Electric cloud applications such as EcoStruxure™ Energy Hub or Asset Advisor.
- Ease of commissioning with EcoStruxure™ Power Commission software or directly through the Panel Server webpages, enabling device plug-and-play and auto-discovery features.
- Ease of operation with user friendly embedded webpages, and data contextualization for more relevant analytics.

Main features

- Power Supply 24 V DC, 110...277 V AC/DC, PoE-PD (CLASS 0, IEEE 802.3af/at)
- Designed to match demanding electrical switchboard environment (temperature, humidity electromagnetic compatibility)
- Two Ethernet 10Base-T/100Base-T port (supporting switched or separated network topology)
- Wi-Fi (All-in-one Panel Server Universal)
- Modbus RS485 serial communication
- IEEE 802.15.4 wireless communication (All-in-one Panel Server Universal)
- Modbus TCP/IP server and client
- Support of HTTPS, NTP, SNTP, DHCP client and server with proxy management
- Modbus RS485 to Modbus TCP/IP Gateway
- Wireless devices concentrator to Modbus TCP/IP (All-in-one Panel Server Universal)
- Two digital inputs (24 V DC version only) for contact information or WAGES pulse meter
- Designed through a Secured Development Life Cycle in accordance to IEC 62443-4-1
- Commissioning through EcoStruxure™ Power Commission or through Embedded Web-Pages
- Speed-up commissioning through device list import and configuration export to the monitoring software
- Fully integrated in Cybersecurity Admin Expert tool to facilitate the management of cybersecurity in your electrical network's (Security features and measures such as enabling/disabling communication means or implementation of two Wired by Design models)
- Embedded web server for real-time measurement visualization, and power consumption
- Real-time alarm display

Accessories for All-in-one Panel Server Universal

- Wi-Fi external antenna (PASA-ANT1) for PAS600 and PAS600L

Panel Server Universal

Panel Server Universal technical specification

Technical data		EcoStruxure™ Panel Server Universal			
Commercial Reference		PAS600	PAS600L	PAS600LWD	PAS600PWD
Power Supply					
Voltage		110...277 V AC/DC	24 V DC	24 V DC	via POE
Tolerance		± 10%		± 10%	NA
Frequency		45...65 Hz	NA		
Maximum consumption		3 W/10 VA	3 W	3.5 W	
Ethernet & Wi-Fi					
Ethernet 10/100base T	Number of Ports	Two RJ45 ports			
	PoE 802.3af & 802.3at Class 0	No			1 port (PD)
Wi-Fi	Supported Frequency	2.4 GHz		-	-
TCP/IP		Yes			
IP V4/IP V6		Yes			
DPWS		Yes			
DHCP	Client	Yes			
	Server (Separate Nework)	Yes			
Modbus TCP/IP Server	Max. number of client connection	64			
Modbus TCP/IP Client	Max. number of Modbus TCP/IP devices	128 (+2)			
Schneider Electric Cloud Services		Yes			
HTTPS		Yes			
External Wi-Fi/Antenna		PASA-ANT1		-	-
Wireless Devices (IEEE 802.15.4)					
Number of devices	Total for mixed network	up to 40 devices (+2)		NA	
	PowerTag Energy & Easergy TH110/CL110	up to 85 devices (+2)		NA	
	Other type of devices (+1)	40 devices (+2)		NA	
Serial Ports					
Modbus RS485 Client	Max. number of devices w/o repeater	32 devices			
	Max. number of devices with repeater	128 devices			
	Maximum Length	1000 m			
	Baud Rate	1200, 2400, 4800, 9600, 19200, 38400, 57600, 115200			
Functionality					
Data Buffering for cloud applications		1 month			
Data Logger and Web-Server	Data Logging	No			
	Event logging	Yes (+2)			
	Simple Monitoring Web-Pages	Yes			
	Monitoring Web-Pages with historical data	No			
Time Management	RTC (with battery)	Yes			
	TimeUpdate (NTP & SNTP)	Yes			
Digital inputs					
Two DI	WAGES & Dry-Contact	No	Yes	Yes	No
Environmental					
Protection Degree	Front Face	IP40			
	Others	IP20			
OverVoltage Category		OVC III			
Polution Degree		2	3	3	2
Temperature	Operation	-25...+70 °C			
	Storage	-40...+85 °C			
Altitude Max.		< 2000 m	< 4000 m (+3)		< 2000 m
Relative Humidity		0...93%	5...95%	5...95%	0...93%
Mechanical					
Form factor		Acti9			
Installation		Din Rail			
Width		72 mm			
Weight		201 g	181 g	180 g	182 g
Standard & Certification					
Certifications		CE, CULus, CB, RCM, UKCA, FCC, IC, RF, Marine certification (DNV)		CE, CULus, CB, RCM, UKCA, FCC, IC, Marine certification (DNV)	
Standards		EN/ IEC 61010-1, EN/IEC 61010-2-201, UL 61010-1, UL 61010-2-201, CSA C22.2 No 61010-1-12, CAN/CSA C22.2 No 61010-2-201, EN IEC 62974-1, EN/IEC 61326-1, ETSI EN 301-489-1, ETSI EN 301-489-17, ETSI EN 300-328, IEEE 802.15.4, IEEE 802.11b/g/n, IEEE 802.3 af/at, IEC 60945, 47 CFR FCC Part 15, Subpart B, Class A, EN IEC 62311, ANSI C63, IACS UR E10, DNVGL-CG-0339, IEC62443-3-3 (PAS600L)		EN/ IEC 61010-1, EN/IEC 61010-2-201, UL 61010-1, UL 61010-2-201, CSA C22.2 No 61010-1-12, CAN/CSA C22.2 No 61010-2-201, EN IEC 62974-1, EN/IEC 61326-1, IEC 60945, 47 CFR FCC Part 15, Subpart B, Class A, IACS UR E10, DNVGL-CG-0339, EN 62947-1	

(+1) *Consult the User Manual or other documentations to check the limit applicable to your wireless device.*
(+2) *Lower limits may apply depending on the firmware version, the serial line length, and the type of device(s). Consult the User Manual, Release Notes or other documentations.*
(+3) *The maximum altitude can be less than 4000 m with an operating temperature of -25...+60 °C between 2000 m and 4000 m.*

Panel Server Universal

Panel Server Universal dimensions

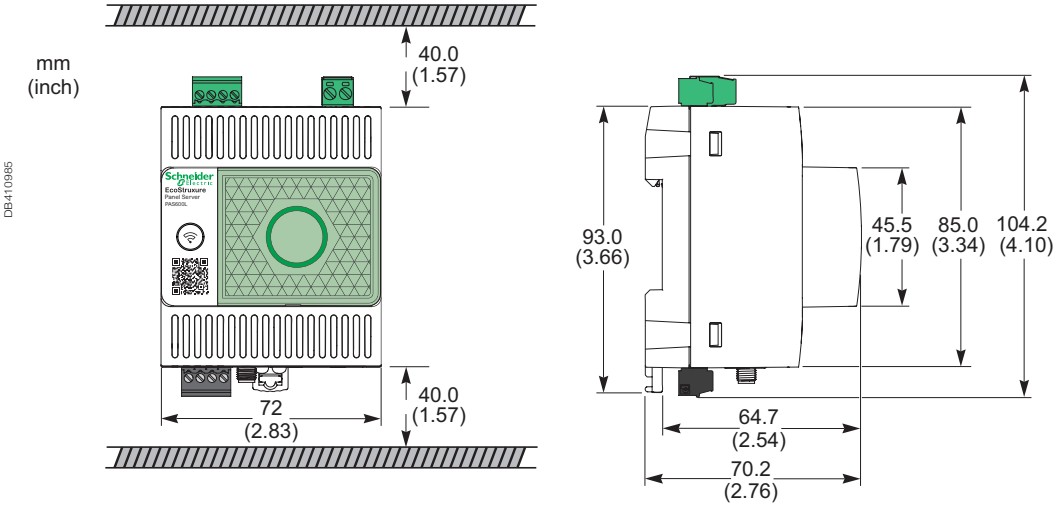

Panel Server Universal physical descriptions

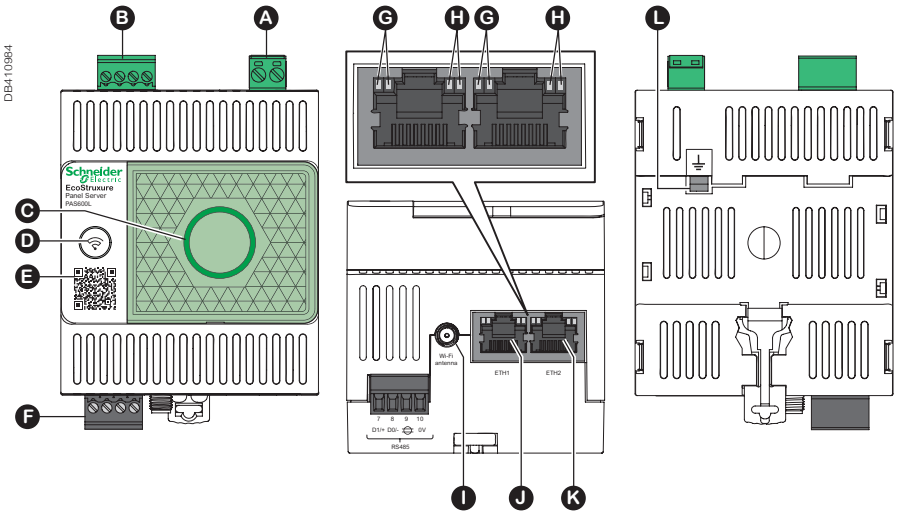

- A Power supply terminal block (PAS600, PAS600L, PAS600LWD)
- B Digital input terminal block (PAS600L and PAS600LWD)
- C EcoStruxure™ Panel Server status LED
- D Restart button
- E QR code to product information
- F RS-485 Modbus communication port
- G Ethernet LED 1: Speed
- H Ethernet LED 2: Activity
- I Wi-Fi external antenna port (PAS600 and PAS600L)
- J Ethernet 1 communication port
- K Ethernet 2 communication port (PAS600, PAS600L, and PAS600LWD)/Ethernet 2 communication port - PoE (PAS600PWD only)
- L Grounding connection

*Please see the appropriate **Installation Guide** for accurate and complete information on the installation of this product.*

Panel Server Advanced

Panel Server Advanced- Front ISO view

Standards & certifications

- IEC 61010-1
- IEC 61010-2-201
- UL 61010-1
- UL 61010-2-201
- IEC 62974-1
- ETSI EN 301 489-1 V.2.2.3
- ETSI EN 301 489-17 V.3.2.4
- IEC 61326-1
- IEC 62974-1
- EN50581
- EN 62321
- EN 62474
- ETSI EN 300 328 V2.2.2

Comm. Reference	Description
PAS800L	Panel Server Advanced with 24 V DC power supply
PAS800P	Panel Server Advanced with PoE power supply
PAS800	Panel Server Advanced with 110...277 V AC/ DC power supply

Panel Server has Data Logger and Local Energy Server capabilities. It embodies the first step into energy monitoring.
Follow, analyze and compare your loads consumption to enable energy savings.

Functions

- An all-in-one gateway to retrieve data from both your wireless IEEE 802.15.4 devices and Modbus devices.
- Monitor up to three years historized data and analyze your energy consumption directly through the Panel Server Advanced embedded webpages.
- Connect to your monitoring and control software such as EcoStruxure™ Power Monitoring Expert, EcoStruxure™ Power Operation or to your Building Management System.
- Connect to Schneider Electric cloud applications such as **EcoStruxure™ Energy Hub** or Asset Advisor.
- Ease of commissioning with EcoStruxure™ Power Commission software or directly through the Panel Server webpages, enabling device plug-and-play and auto-discovery features.
- Ease of operation with user friendly embedded webpages, and data contextualization for more relevant analytics.

Main features

- Power Supply 24 V DC, 110...277 V AC/DC, PoE-PD (CLASS 0, IEEE802.3af/at)
- Designed to match demanding electrical switchboard environment (temperature, humidity electromagnetic compatibility)
- Two Ethernet 10Base-T/100Base-T port (supporting switched or separated network topology)
- Wi-Fi
- Modbus RS485 serial communication
- IEEE 802.15.4 wireless communication
- Modbus TCP/IP server and client
- Support of HTTPS, NTP, SNTP, DHCP client and server with proxy management
- Modbus RS485 to Modbus TCP/IP Gateway
- Wireless devices concentrator to Modbus TCP/IP
- Two digital inputs (24 V DC version only) for contact information or WAGES pulse meter
- Designed through a Secured Development Life Cycle in accordance to IEC 62443-4-1
- Commissioning through EcoStruxure™ Power Commission or though Embedded Web-Pages
- Speed-up commissioning through device list import and configuration export to the monitoring software
- Fully integrated in Cybersecurity Admin Expert tool for security settings (Security features such as enabling/disabling communication means)
- Embedded web server for real-time measurement and alarm visualization, energy & power consumption by usage and location, 3 years historical trending and dashboarding
- 3 years Data Logger with 32 GB memory
- Real-time alarm display and e-mail notification
- Event and alarm historization and dashboarding

Compatible accessories

- Wi-Fi external antenna (PASA-ANT1)
- IEEE 802.15.4 external antenna (PASA-ANT1)

Panel Server Advanced

Panel Server Advanced technical specification

Technical data			EcoStruxure™ Panel Server Advanced	
Commercial Reference		PAS800	PAS800L	PAS800P
Power Supply				
Voltage		110...277 V AC/DC	24 V DC	PoE
Tolerance		± 10 %	± 10 %	
Frequency		45...65 Hz	NA	
Maximum consumption		3 W/10 VA	3 W	3.5 W
Ethernet & Wi-Fi				
Ethernet 10/100base T	Number of Ports	Two RJ45 ports		
	PoE 802.3af & 802.3at Class 0	No		1 port (PD)
Wi-Fi	Supported Frequency	2.4 & 5 GHz		
TCP/IP		Yes		
IP V4/IP V6		Yes		
DPWS		Yes		
DHCP	Client	Yes		
	Server (Separate Nework)	Yes		
Modbus TCP/IP Server	Max. number of client connection	64		
Modbus TCP/IP Client	Max. number of Modbus TCP/IP devices	128 (+2)		
Schneider Electric Cloud Services		Yes		
HTTPS		Yes		
External Wi-Fi/Antenna		PASA-ANT1		
Wireless Devices (IEEE 802.15.4)				
Number of devices	Total for mixed network	up to 40 devices (+2)		
	PowerTag Energy & Easergy TH110/CL110	up to 85 devices (+2)		
	Other type of devices (+1)	40 devices (+2)		
External IEEE 802.15.4 Antenna		PASA-ANT1		
Serial Ports				
Modbus RS485 Client	Max. number of devices w/o repeater	32 devices		
	Max. number of devices with repeater	128 devices		
	Maximum Length	1000 m		
	Baud Rate	1200, 4800, 9600, 19200, 38400, 57600, 115200		
Functionality				
Data Buffering for cloud applications		3 months		
Data Logger and Web-Server	Data Logging	3 years		
	Event logging	Yes (+2)		
	Simple Monitoring Web-Pages	Yes		
	Monitoring Web-Pages with historical data	Yes		
Time Management	RTC (with battery)	Yes		
	TimeUpdate (NTP & SNTP)	Yes		
Digital inputs				
Two DI	WAGES & Dry-Contact	No	Yes	No
Environmental				
Protection Degree	Front Face	IP40		
	Others	IP20		
OverVoltage Category		OVC III		
Polution Degree		2	3	2
Temperature	Operation	-25...70 °C		
	Storage	-40...85 °C		
Altitude Max.		< 2000 m	< 4000 m (+3)	< 2000 m
Relative Humidity		5...95%		
Mechanical				
Form factor		Acti9		
Installation		Din Rail		
Width		72 mm		
Weight		206 g	186 g	184 g
Standard & Certification				
Certifications		CE, CULus, CB, RCM, UKCA, FCC, IC, RF, Marine certification (DNV)		
Standards		EN/ IEC 61010-1, EN/IEC 61010-2-201, UL 61010-1, UL 61010-2-201, CSA C22.2 No 61010-1-12, CAN/CSA C22.2 No 61010-2-201, EN IEC 62974-1, EN/IEC 61326-1, ETSI EN 301-489-1, ETSI EN 301-489-17, ETSI EN 300-328, IEEE 802.15.4, IEEE 802.11b/g/n, IEEE 802.3 af/at, EN 301-893, IEC 60945, 47 CFR FCC Part 15, Subpart B, Class A, EN IEC 62311		

(+1) *Consult the User Manual or other documentations to check the limit applicable to your wireless device.*

(+2) *Lower limits may apply depending on the firmware version, the serial line length, and the type of device(s). Consult the User Manual, Release Notes or other documentations.*

(+3) *The maximum altitude can be less than 4000 m with an operating temperature of -25...+60 °C between 2000 m and 4000 m.*

Panel Server Advanced

Panel Server Advanced dimensions

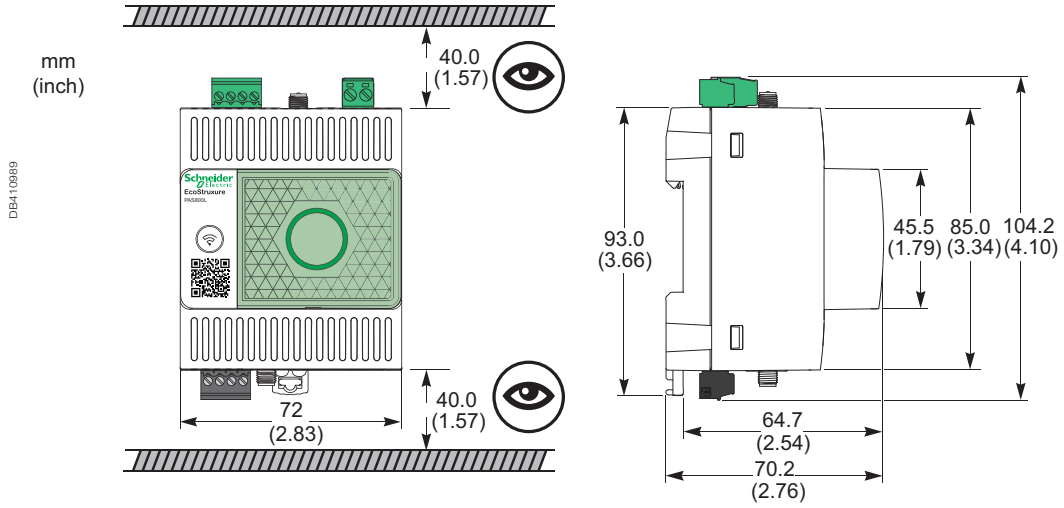

Panel Server Advanced physical descriptions

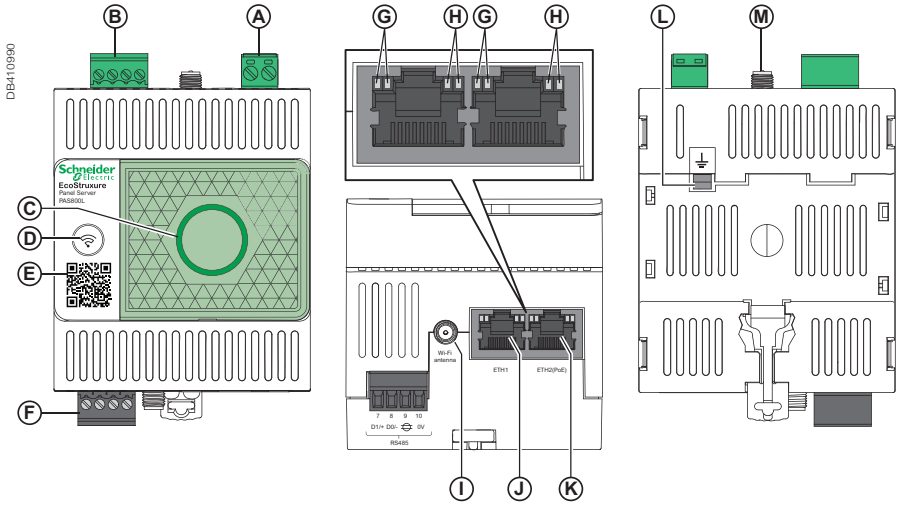

- **A** Power supply terminal block (PAS800 & PAS800L only)
- **B** Digital input terminal block (PAS800L only)
- **C** EcoStruxure™ Panel Server status LED
- **D** Restart button
- **E** QR code to product information
- **F** RS-485 Modbus communication port
- **G** Ethernet LED 1: Speed
- **H** Ethernet LED 2: Activity
- **I** Wi-Fi external antenna port
- **J** Ethernet 1 communication port
- **K** Ethernet 2 communication port (PAS800 & PAS800L only)/Ethernet 2 communication port - PoE (PAS800P only)
- **L** Grounding connection
- **M** IEEE802.15.4 external antenna port

*Please see the appropriate **Installation Guide** for accurate and complete information on the installation of this product.*

Commercial Reference Numbers

Commercial reference number	Description	Page
	Current Transformers	**16**
	CT Ip/5 A ratio	**18**
16550	44 x 66 x 37 Adapter for DIN rails Mounting plate	
16551	56 x 84 x 60 Adapter for DIN rails Mounting plate, insulated locking screw	
METSECT5CC004	CC 40 A	
METSECT5CC005	CC 50 A	
METSECT5CC006	CC 60 A	
METSECT5CC008	CC 75 A	
METSECT5CC010	CC 100 A	
METSECT5CC013	CC 125 A	
METSECT5CC015	CC 150 A	
METSECT5CC020	CC 200 A	
METSECT5CC025	CC 250 A	
METSECT5MB025	MB 250 A	
METSECT5MB030	MB 300 A	
METSECT5MB040	MB 400 A	
METSECT5MA015	MA 150 A	
METSECT5MA020	MA 200 A	
METSECT5MA025	MA 250 A	
METSECT5MA030	MA 300 A	
METSECT5MA040	MA 400 A	
METSECT5MC025	MC 250 A	
METSECT5MC030	MC 300 A	
METSECT5MC040	MC 400 A	
METSECT5MC050	MC 500 A	
METSECT5MC060	MC 600 A	
METSECT5MC080	MC 800 A	
METSECT5MD050	MD 500 A	
METSECT5MD060	MD 600 A	
METSECT5MD080	MD 800 A	
METSECT5CYL1	Cylinder 8.5 mm dia.	
METSECT5CYL2	Cylinder 10.5 mm dia.	
METSECT5COVER	sealable cover 60.5 x 22 x 23.5 mm for CT TI	
METSECT5VV500	CT tropicalised 5000 5 bars 55x165	
METSECT5VV600	CT tropicalised 6000 5 bars 55x165	
METSECT5DA040	CT tropicalised 400 5 dual out. bars 32x65	
METSECT5DA050	CT tropicalised 500 5 dual out. bars 32x65	
METSECT5DA060	CT tropicalised 600 5 dual out. bars 32x65	
METSECT5DA080	CT tropicalised 800 5 dual out. bars 32x65	
METSECT5DA100	CT tropicalised 1000 5 dual out. bars 32x65	
METSECT5DA125	CT tropicalised 1250 5 dual out. bars 32x65	
METSECT5DA150	CT tropicalised 1500 5 dual out. bars 32x65	
METSECT5DB100	CT tropicalised 1000 5 dual out. bars 38x127	
METSECT5DB125	CT tropicalised 1250 5 dual out. bars 38x127	
METSECT5DB150	CT tropicalised 1500 5 dual out. bars 38x127	
METSECT5DB200	CT tropicalised 2000 5 dual out. bars 38x127	
METSECT5DB250	CT tropicalised 2500 5 dual out. bars 38x127	

Commercial reference number	Description	Page
METSECT5DB300	CT tropicalised 3000 5 dual out. bars 38x127	
METSECT5DC200	CT tropicalised 2000 5 dual out. bars 52x127	
METSECT5DC250	CT tropicalised 2500 5 dual out. bars 52x127	
METSECT5DC300	CT tropicalised 3000 5 dual out. bars 52x127	
METSECT5DC400	CT tropicalised 4000 5 dual out. bars 52x127	
METSECT5DD100	CT tropicalised 1000 5 dual out. bars 34x84	
METSECT5DD125	CT tropicalised 1250 5 dual out. bars 34x84	
METSECT5DD150	CT tropicalised 1500 5 dual out. bars 34x84	
METSECT5DE100	CT tropicalised 1000 5 dual out. bars 54x102	
METSECT5DE125	CT tropicalised 1250 5 dual out. bars 54x102	
METSECT5DE150	CT tropicalised 1500 5 dual out. bars 54x102	
METSECT5DE200	CT tropicalised 2000 5 dual out. bars 54x102	
METSECT5DH125	CT tropicalised 1250 5 dual out. bars 38x102	
METSECT5DH150	CT tropicalised 1500 5 dual out. bars 38x102	
METSECT5DH200	CT tropicalised 2000 5 dual out. bars 38x102	
	Split core CTs	**28**
	Busbar Type H	
	Frame 1	
METSECT5HA015	IEC Split Core CT Cable 150/5 A 1 VA cl.1	
METSECT5HA020	IEC Split Core CT Cable 200/5 A 1.5 VA cl.1	
METSECT5HA025	IEC Split Core CT Cable 250/5 A 1 VA cl.0.5	
	Frame 2	
METSECT5HD025	IEC Split Core CT Cable 250/5 A 1 VA cl.1	
METSECT5HD030	IEC Split Core CT Cable 300/5 A 1.5 VA cl.1	
METSECT5HD040	IEC Split Core CT Cable 400/5 A 2.5 VA cl.1	
METSECT5HD050	IEC Split Core CT Cable 500/5 A 1VA cl.0.5	
	Frame 3	
METSECT5HG010	IEC Split Core CT Cable 100/5 A 1.5 VA cl.3	
METSECT5HG013	IEC Split Core CT Cable 125/5 A 2.5 VA cl.3	
METSECT5HG015	IEC Split Core CT Cable 150/5 A 3 VA cl.3	
METSECT5HG020	IEC Split Core CT Cable 200/5 A 3 VA cl.3	
METSECT5HG025	IEC Split Core CT Cable 250/5 A 3 VA cl.3	
METSECT5HG030	IEC Split Core CT Cable 300/5 A 2.5 VA cl.1	
METSECT5HG040	IEC Split Core CT Cable 400/5 A 5 VA cl.1	
METSECT5HG050	IEC Split Core CT Cable 500/5 A 5 VA cl.1	
METSECT5HG060	IEC Split Core CT Cable 600/5 A 5 VA cl.1	
	Frame 4	
METSECT5HJ030	IEC Split Core CT Cable 300/5 A 2.5 VA cl.1	
METSECT5HJ040	IEC Split Core CT Cable 400/5 A 5VA cl.1	
METSECT5HJ050	IEC Split Core CT Cable 500/5 A 5VA cl.1	
METSECT5HJ060	IEC Split Core CT Cable 600/5 A 2.5 VA cl.0.5	
METSECT5HJ075	IEC Split Core CT Cable 750/5 A 2.5 VA cl.0.5	
METSECT5HJ080	IEC Split Core CT Cable 800/5 A 2.5 VA cl.0.5	

PowerLogic™ Commercial Reference Numbers

Commercial reference number	Description	Page
	Frame 5	
METSECT5HM030	IEC Split Core CT Cable 300/5 A 2.5 VA cl.1	
METSECT5HM040	IEC Split Core CT Cable 400/5 A 5 VA cl.1	
METSECT5HM050	IEC Split Core CT Cable 500/5 A 5 VA cl.1	
METSECT5HM060	IEC Split Core CT Cable 600/5 A 2.5 VA cl.0.5	
METSECT5HM075	IEC Split Core CT Cable 750/5 A 2.5 VA cl.0.5	
METSECT5HM080	IEC Split Core CT Cable 800/5 A 2.5 VA cl.0.5	
	Frame 6	
METSECT5HP025	IEC Split Core CT Cable 250/5 A 1.5 VA cl.1	
METSECT5HP030	IEC Split Core CT Cable 300/5 A 2.5 VA cl.1	
METSECT5HP040	IEC Split Core CT Cable 400/5 A 5 VA cl.1	
METSECT5HP050	IEC Split Core CT Cable 500/5 A 5 VA cl.1	
METSECT5HP060	IEC Split Core CT Cable 600/5 A 5 VA cl.1	
METSECT5HP075	IEC Split Core CT Cable 750/5 A 5 VA cl.1	
METSECT5HP080	IEC Split Core CT Cable 800/5 A 5 VA cl.1	
METSECT5HP100	IEC Split Core CT Cable 1000/5 A 5 VA cl.1	
	Busbar Type G	
	Frame 7	
METSECT5GA010	IEC CT Split Core Busbar 100/5 A 1.25 VA cl.3	
METSECT5GA015	IEC CT Split Core Busbar 150/5 A 1.5 VA cl.3	
METSECT5GA020	IEC CT Split Core Busbar 200/5 A 2.5 VA cl.3	
METSECT5GA025	IEC CT Split Core Busbar 250/5 A 1.5 VA cl.1	
METSECT5GA030	IEC CT Split Core Busbar 300/5 A 3.75 VA cl.1	
METSECT5GA040	IEC CT Split Core Busbar 400/5 A 1 VA cl.0.5	
	Frame 8	
METSECT5GD025	IEC CT Split Core Busbar 250/5 A 1.5 VA cl.1	
METSECT5GD030	IEC CT Split Core Busbar 300/5 A 2.5 VA cl.1	
METSECT5GD040	IEC CT Split Core Busbar 400/5 A 1 VA cl.0.5	
METSECT5GD050	IEC CT Split Core Busbar500/5 A 2.5 VA cl.0.5	
METSECT5GD060	IEC CT Split Core Busbar 600/5 A 2.5 VA cl.0.5	
METSECT5GD075	IEC CT Split Core Busbar 750/5 A 2.5 VA cl.0.5	
METSECT5GD080	IEC CT Split Core Busbar 800/5 A 2.5 VA cl.0.5	
METSECT5GD100	IEC CT Split Core Busbar 1000/5 A 5 VA cl.0.5	
	Frame 9	
METSECT5GG025	IEC CT Split Core Busbar 250/5 A 1.5 VA cl.1	
METSECT5GG030	IEC CT Split Core Busbar 300/5 A 2.5 VA cl.1	
METSECT5GG040	IEC CT Split Core Busbar 400/5 A 2.5 VA cl.1	
METSECT5GG050	IEC CT Split Core Busbar 500/5 A 2.5 VA cl.0.5	
METSECT5GG060	IEC CT Split Core Busbar 600/5 A 2.5 VA cl.0.5	
METSECT5GG075	IEC CT Split Core Busbar 750/5 A 2.5 VA cl.0.5	
METSECT5GG080	IEC CT Split Core Busbar 800/5 A 2.5 VA cl.0.5	
METSECT5GG100	IEC CT Split Core Busbar 1000/5 A 5 VA cl.0.5	
METSECT5GG120	IEC CT Split Core Busbar 1200/5 A 5 VA cl.0.5	
METSECT5GG125	IEC CT Split Core Busbar 1250/5 A 7.5 VA cl.0.5	
METSECT5GG150	IEC CT Split Core Busbar 1500/5 A 7.5 VA cl.0.5	
	Frame 10	
METSECT5GJ100	IEC CT Split Core Busbar 1000/5 A 10 VA cl.0.5	
METSECT5GJ120	IEC CT Split Core Busbar 1200/5 A 10 VA cl.0.5	
METSECT5GJ150	IEC CT Split Core Busbar 1500/5 A 10 VA cl.0.5	
METSECT5GJ160	IEC CT Split Core Busbar 1600/5 A 10 VA cl.0.5	
METSECT5GJ200	IEC CT Split Core Busbar 2000/5 A 10 VA cl.0.5	
METSECT5GJ250	IEC CT Split Core Busbar 2500/5 A 10 VA cl.0.5	
METSECT5GJ300	IEC CT Split Core Busbar 3000/5 A 15 VA cl.0.5	
METSECT5GJ400	IEC CT Split Core Busbar 4000/5 A 15 VA cl.0.5	

Commercial reference number	Description	Page
	Rogowski CTs	**34**
METSECTR25500	Rogowski CT, 250 mm core length, 80 mm dia.	
METSECTR30500	Rogowski CT, 300 mm core length, 96 mm dia.	
METSECTR46500	Rogowski CT, 400 mm core length, 146 mm dia.	
METSECTR60500	Rogowski CT, 600 mm core length, 191 mm dia.	
METSECTR90500	Rogowski CT, 900 mm core length, 287 mm dia.	
	Panel Instruments	**35**
	DIN rail analog ammeters, voltmeters	**36**
16029	0-30 A no 8	
16030	X/5 8	
16031	0-5 A	
16032	0-50 A 50/5	
16033	0-75 A 75/5	
16034	0-100 A 100/5	
16035	0-150 A 150/5	
16036	0-200 A 200/5	
16037	0-250 A 250/5	
16038	0-300 A 300/5	
16039	0-400 A 400/5	
16040	0-500 A 500/5	
16041	0-600 A 600/5	
16042	0-800 A 800/5	
16043	0-1000 A 1000/5	
16044	0-1500 A 1500/5	
16045	0-2000 A 2000/5	
16060	0-300 V 8	
16061	0-500 V 8	
	DIN rail digital ammeters, voltmeter, frequency meter	**37**
15202	Direct reading iAMP 0-10 A No 4	
15209	Multi-rating iAMP 0-5000 A As per rating 4	
15201	iVLT 0-600 V 4	
15208	iFRE 20-100 Hz 4	
	72x72 analog ammeter, voltmeter	**38**
16003	AMP for motor feeder	
16004	AMP for standard feeder X/5	
16009	AMP for standard feeder 0-50 A 50/5	
16010	AMP for standard feeder 0-100 A 100/5	
16011	AMP for standard feeder 0-200 A 200/5	
16012	AMP for standard feeder 0-400 A 400/5	
16013	AMP for standard feeder 0-600 A 600/5	
16014	AMP for standard feeder 0-1000 A 1000/5	
16015	AMP for standard feeder 0-1250 A 1250/5	
16016	AMP for standard feeder 0-1500 A 1500/5	
16019	AMP for standard feeder 0-2000 A 2000/5	
16006	AMP for motor feeder 0-30-90 A 30/5	
16007	AMP for motor feeder 0-75-225 A 75/5	
16008	AMP for motor feeder 0-200-600 A 200/5	
16005	VLT 0-500 V	
	96x96 analog ammeter, voltmeter	**39**
16074	AMP for standard feeder X/5	
16079	AMP for standard feeder 0-50 A 50/5	
16080	AMP for standard feeder 0-100 A 100/5	
16081	AMP for standard feeder 0-200 A 200/5	
16082	AMP for standard feeder 0-400 A 400/5	
16083	AMP for standard feeder 0-600 A 600/5	
16084	AMP for standard feeder 0-1000 A 1000/5	
16085	AMP for standard feeder 0-1250 A 1250/5	
16086	AMP for standard feeder 0-1500 A 1500/5	
16087	AMP for standard feeder 0-2000 A 2000/5	
16088	AMP for standard feeder 0-2500 A 2500/5	
16089	AMP for standard feeder 0-3000 A 3000/5	

PowerLogic™ Commercial Reference Numbers

Commercial reference number	Description	Page
16090	AMP for standard feeder 0-4000 A 4000/5	
16091	AMP for standard feeder 0-5000 A 5000/5	
16092	AMP for standard feeder 0-6000 A 6000/5	
16073	AMP for motor feeder X/5	
16076	AMP for motor feeder 0-30-90 A 30/5	
16077	AMP for motor feeder 0-75-225 A 75/5	
16078	AMP for motor feeder 0-200-600 A 200/5	
16075	VLT 0-500 V	
	48x48 CMA, CMV selector switches	40
16017	CMA 20 4	
16018	CMV 500 7	
	DIN rail iCMA, iCMV selector switches	41
15126	iCMA 10 415 4	
15125	iCMV 10 415 4	
	iCH hour counter	42
15440	iCH "DIN" 230 V AC ± 10 %/50 Hz 4mm	
15607	CH "48 x 48" 24 V AC ± 10 %/50 Hz	
15608	CH "48 x 48" 230 V AC ± 10 %/50 Hz	
15609	CH "48 x 48" 12 to 36 V DC	
	iCI impulse counter	43
15443	iCI 4mm impulse counter DIN	
	Basic Energy Metering	46
	iEM2xxx	47
A9MEM2000T	iEM2000T basic energy meter, no display	
A9MEM2000	iEM2000 basic energy meter	
A9MEM2010	iEM2010 energy meter, kWh pulse output	
A9MEM2100	iEM2100 basic energy meter	
A9MEM2050	iEM2050 modular single phase power meter 230 V - 45 A with Modbus	
A9MEM2055	iEM2055 modular single phase power meter 230 V - 45 A with Modbus, MID	
A9MEM2105	iEM2105 energy meter, kWh pulse output with partial meter	
A9MEM2110	iEM2110 energy meter, kWh and kvarh pulse outputs with two tariffs, four quadrant energy measurement, MID certified	
A9MEM2135	iEM2135 energy meter, M-Bus communication, four quadrant energy measurement, two tariffs, MID certified	
A9MEM2150	iEM2150 energy meter, Modbus communication, four quadrant energy measurement	
A9MEM2155	iEM2155 energy meter, Modbus communication, four quadrant energy measurement, two tariffs, MID certified	
A9MEM2435	iEM2435 power and energy meter, Class 1, 230 V, 100 A, M-Bus, MID, 2 tariffs, 2 pulse outputs, 4 quadrants, LCD display	
A9MEM2455	iEM2455 power and energy meter, Class 1, 230 V, 100 A, RS-485, MID, 2 tariffs, 2 pulse outputs, 4 quadrants, LCD display	
	iEM3000	52
A9MEM3100	iEM3100 basic energy meter	
A9MEM3110	iEM3110 energy meter with pulse output	
A9MEM3115	iEM3115 multi-tariff energy meter	
A9MEM3135	iEM3135 advanced multi-tariff energy meter & electrical parameter plus M-Bus comm port	
A9MEM3150	iEM3150 energy meter & electrical parameter plus Modbus RS-485 comm port	
A9MEM3155	iEM3155 advanced multi-tariff energy meter & electrical parameter plus Modbus RS-485 comm port	
A9MEM3165	iEM3165 advanced multi-tariff energy meter & electrical parameter plus BACnet MS/TP comm port	
A9MEM3175	iEM3175 advanced multi-tariff energy meter & electrical parameter plus LON TP/FT-10 comm port	
A9MEM3200	iEM3200 basic energy meter	
A9MEM3210	iEM3210 energy meter with pulse output	
A9MEM3215	iEM3215 multi-tariff energy meter	
A9MEM3235	iEM3235 advanced multi-tariff energy meter & electrical parameter plus M-Bus comm port	

Commercial reference number	Description	Page
A9MEM3250	iEM3250 energy meter & electrical parameter plus Modbus RS-485 comm port	
A9MEM3255	iEM3255 advanced multi-tariff energy meter & electrical parameter plus Modbus RS485 comm port	
A9MEM3265	iEM3265 advanced multi-tariff energy meter & electrical parameter plus BACnet MS/TP comm port	
A9MEM3275	iEM3275 advanced multi-tariff energy meter & electrical parameter plus LON TP/FT-10 comm port	
A9MEM3300	iEM3300 basic energy meter	
A9MEM3310	iEM3310 energy meter with pulse output	
A9MEM3335	iEM3335 advanced multi-tariff energy meter & electrical parameter plus M-Bus comm port	
A9MEM3350	iEM3350 energy meter & electrical parameter plus Modbus RS-485 comm port	
A9MEM3355	iEM3355 advanced multi-tariff energy meter & electrical parameter plus Modbus RS485 comm port	
A9MEM3365	iEM3365 advanced multi-tariff energy meter & electrical parameter plus BACnet MS/TP comm port	
A9MEM3375	iEM3375 advanced multi-tariff energy meter & electrical parameter plus LON TP/FT-10 comm port	
A9MEM3455	iEM3455 advanced multi-tariff energy meter & electrical parameter plus Modbus RS-485 comm port	
A9MEM3465	iEM3465 advanced multi-tariff energy meter & electrical parameter plus BACnet MS/TP comm port	
A9MEM3555	iEM3555 advanced multi-tariff energy meter & electrical parameter plus Modbus RS-485 comm port	
A9MEM3565	iEM3565 advanced multi-tariff energy meter & electrical parameter plus BACnet MS/TP comm port	
	LVCTs	56
LVCT00050S	CT, split-core, Size 0, 50 A to 0.333 V	
LVCT00101S	CT, split-core, Size 1, 100 A to 0.333 V	
LVCT00201S	CT, split-core, Size 1, 200 A to 0.333 V	
LVCT00102S	CT, split-core, Size 2, 100 A to 0.333 V	
LVCT00202S	CT, split-core, Size 2, 200 A to 0.333 V	
LVCT00302S	CT, split-core, Size 2, 300 A to 0.333 V	
LVCT00403S	CT, split-core, Size 3, 400 A to 0.333 V	
LVCT00603S	CT, split-core, Size 3, 600 A to 0.333 V	
LVCT00803S	CT, split-core, Size 3, 800 A to 0.333 V	
LVCT00804S	CT, split-core, Size 4, 800 A to 0.333 V	
LVCT01004S	CT, split-core, Size 4, 1000 A to 0.333 V	
LVCT01204S	CT, split-core, Size 4, 1200 A to 0.333 V	
LVCT01604S	CT, split-core, Size 4, 1600 A to 0.333 V	
LVCT02004S	CT, split-core, Size 4, 2000 A to 0.333 V	
LVCT02404S	CT, split-core, Size 4, 2400 A to 0.333 V	
	PM3000	58
METSEPM3200	PM3200 basic power meter	
METSEPM3210	PM3210 power meter with pulse output	
METSEPM3250	PM3250 power meter with RS485 port	
METSEPM3255	PM3255 power meter plus 2 digital inputs, 2 digital outputs with RS-485 port	
	PowerTag Energy	64
A9MEM1520	PowerTag Energy M63 1P+W	
A9MEM1521	PowerTag Energy M63 1P+N Top	
A9MEM1522	PowerTag Energy M63 1P+N Bottom	
A9MEM1540	PowerTag Energy M63 3P	
A9MEM1541	PowerTag Energy M63 3P+N Top	
A9MEM1542	PowerTag Energy M63 3P+N Bottom	
A9MEM1543	PowerTag Energy M63 3P 230 V LL	
A9MEM1560	PowerTag Energy F63 1P+N	
A9MEM1561	PowerTag Energy P63 1P+N Top	
A9MEM1562	PowerTag Energy P63 1P+N Bottom	
A9MEM1563	PowerTag Energy P63 1P+N B RCBO	
A9MEM1564	PowerTag Energy F63 1P+N 110 V	
A9MEM1570	PowerTag Energy F63 3P+N	
A9MEM1571	PowerTag Energy P63 3P+N Top	
A9MEM1572	PowerTag Energy P63 3P+N Bottom	
A9MEM1573	PowerTag Energy F63 3P	

PowerLogic™ Commercial Reference Numbers

Commercial reference number	Description	Page
A9MEM1574	PowerTag Energy F63 3P+N 127/220 V	
A9MEM1580	PowerTag Energy F160 3P / 3P+N	
A9MEM1590	PowerTag Energy R200 3P / 3P+N	
A9MEM1591	PowerTag Energy R600 3P / 3P+N	
A9MEM1592	PowerTag Energy R1000 3P / 3P+N	
A9MEM1593	PowerTag Energy R2000 3P / 3P+N	
LV434020	PowerTag Energy M250 3P	
LV434021	PowerTag Energy M250 3P+N	
LV434022	PowerTag Energy M630 3P	
LV434023	PowerTag Energy M630 3P+N	
R9M20	PowerTag Energy R9 M63 1P+W	
R9M21	PowerTag Energy R9 M63 1P+N Top	
R9M22	PowerTag Energy R9 M63 1P+N Bottom	
R9M40	PowerTag Energy R9 M63 3P	
R9M41	PowerTag Energy R9 M63 3P+N Top	
R9M42	PowerTag Energy R9 M63 3P+N Bottom	
R9M43	PowerTag Energy R9 M63 3P 230 V LL	
R9M60	PowerTag Energy R9 F63 1P+N	
R9M70	PowerTag Energy R9 F63 3P+N	
	Wireless Products	**106**
	PowerTag Control	**107**
A9XMC2D3	PowerTag C 2DI 230V digital input module	
	HeatTag	**111**
SMT10020	HeatTag smart sensor cable overheating	
	Basic Multi-Function Metering	**114**
	PM5000	**115**
METSEPM5100	Power Meter, 600V AC L-L/ 5A or 1A input, 415V AC L-L or 250V DC control power, Cl 0.5S, 15th harmonic, 1DO	
METSEPM5110	Power Meter, 600V AC L-L/ 5A or 1A input, 415V AC L-L or 250V DC control power, Cl 0.5S, 15th harmonic, 1DO, RS-485	
METSEPM5111	Power Meter, 600V AC L-L/ 5A or 1A input, 415V AC L-L or 250V DC control power, Cl 0.5S, 15th harmonic, 1DO, RS-485, MID	
METSEPM5310	Power Meter, 600V AC L-L/ 5A or 1A input, 415V AC L-L or 250V DC control power, Cl 0.5S, 31st harmonic, 256 kB, 2DI/2DO, RS-485	
METSEPM5310R	Power Meter, 600V AC L-L/ RJ45 LVCT input, 415V AC L-L or 250V DC control power, Cl 0.5S, 31st harmonic, 256 kB, 2DI/2DO, RS-485	
METSEPM5320	Power Meter, 600V AC L-L/ 5A or 1A input, 415V AC L-L or 250V DC control power, Cl 0.5S, 31st harmonic, 256 kB, 2DI/2DO, Ethernet	
METSEPM5320R	Power Meter, 600V AC L-L/ RJ45 LVCT input, 415V AC L-L or 250V DC control power, Cl 0.5S, 31st harmonic, 256 kB, 2DI/2DO, Ethernet	
METSEPM5330	Power Meter, 600V AC L-L/ 5A or 1A input, 415V AC L-L or 250V DC control power, Cl 0.5S, 31st harmonic, 256 kB, 2DI/2DO/2-Relay, RS-485	
METSEPM5331	Power Meter, 600V AC L-L/ 5A or 1A input, 415V AC L-L or 250V DC control power, Cl 0.5S, 31st harmonic, 256 kB, 2DI/2DO/2-Relay, RS-485, MID	
METSEPM5340	Power Meter, 600V AC L-L/ 5A or 1A input, 415V AC L-L or 250V DC control power, Cl 0.5S, 31st harmonic, 256 kB, 2DI/2DO/2-Relay, Ethernet	
METSEPM5341	Power Meter, 600V AC L-L/ 5A or 1A input, 415V AC L-L or 250V DC control power, Cl 0.5S, 31st harmonic, 256 kB, 2DI/2DO/2-Relay, Ethernet, MID	
METSEPM5560	Power Meter, 690V AC L-L/ 5A or 1A input, 480V AC L-L or 250V DC control power, Cl 0.2S, 63rd harmonic, 1.1 MB, 4DI/2-DO, RS-485, Ethernet	
METSEPM5561	Power Meter, 690V AC L-L/ 5A or 1A input, 480V AC L-L or 250V DC control power, Cl 0.2S, 63rd harmonic, 1.1 MB, 4DI/2-DO, RS-485, Ethernet, MID	
METSEPM5562	Power Meter, 690V AC L-L/ 5A or 1A input, 480V AC L-L or 250V DC control power, Cl 0.2S, 63rd harmonic, 1.1 MB, 4DI/2-DO, RS-485, Ethernet, RMI CAN approved, Hardware lockable	
METSEPM5562MC	Power Meter, 690V AC L-L/ 5A or 1A input, 480V AC L-L or 250V DC control power, Cl 0.2S, 63rd harmonic, 1.1 MB, 4DI/2-DO, RS-485, Ethernet, RMI CAN approved, Factory sealed	

Commercial reference number	Description	Page
METSEPM5563	Power Meter, 690V AC L-L/ 5A or 1A input, 480V AC L-L or 250V DC control power, Cl 0.2S, 63rd harmonic, 1.1 MB, 4DI/2-DO, RS-485, Ethernet, DIN mount, No display	
METSEPM5563RD	Power Meter, 690V AC L-L/ 5A or 1A input, 480V AC L-L or 250V DC control power, Cl 0.2S, 63rd harmonic, 1.1 MB, 4DI/2-DO, RS-485, Ethernet, DIN mount, Remote display	
METSEPM5570	Power Meter, 690V AC L-L/ 5A or 1A input, 480V AC L-L or 250V DC control power, Cl 0.2S, 63rd harmonic, 1.1 MB, 2DI/2AI/2-DO, RS-485, Ethernet	
METSEPM5580	Power Meter, 690V AC L-L/ 5A or 1A input, 24 to 64V DC control power, Cl 0.2S, 63rd harmonic, 1.1 MB, 4DI/2-DO, RS-485, Ethernet	
METSEPM5650	Power Meter, 690V AC L-L/ 5A or 1A input, 480V AC L-L or 250V DC control power, Cl 0.2S, 63rd harmonic, 1.1 MB, 4DI/2-DO, RS-485, Ethernet, Wave Form Capture and Sag/swell	
METSEPM5660	Power Meter, 690V AC L-L/ 5A or 1A input, 480V AC L-L or 250V DC control power, Cl 0.2S, 63rd harmonic, 1.1 MB, 2DI/2-DO, RS-485, Ethernet, Residual Current Monitor	
METSEPM5661	Power Meter, 690V AC L-L/ 5A or 1A input, 480V AC L-L or 250V DC control power, Cl 0.2S, 63rd harmonic, 1.1 MB, 2DI/2-DO, RS-485, Ethernet, Residual Current Monitor, MID	
METSEPM5760	Power Meter, 690V AC L-L/ 5A or 1A input, 480V AC L-L or 250V DC control power, Cl 0.2S, 63rd harmonic, 1.1 MB, 2DI/2-DO, RS-485, Ethernet, Wave Form Capture and Sag/swell, Residual current monitor	
METSEPM5761	Power Meter, 690V AC L-L/ 5A or 1A input, 480V AC L-L or 250V DC control power, Cl 0.2S, 63rd harmonic, 1.1 MB, 2DI/2-DO, RS-485, Ethernet, Wave Form Capture and Sag/swell, Residual current monitor, MID	
	Residual Current Monitoring Toroids (Vigirex) - Closed Toroids, A Type	**125**
50437	TA30 - closed toroid A type, for RCM enabled power meters, 30 mm inner diameter, rated current 65 Amps, 1000 turns	
50438	PA50 - closed toroid A type, for RCM enabled power meters, 50 mm inner diameter, rated current 85 Amps, 1000 turns	
50439	IA80 - closed toroid A type, for RCM enabled power meters, 80 mm inner diameter, rated current 160 Amps, 1000 turns	
50440	MA120 - closed toroid A type, for RCM enabled power meters, 120 mm inner diameter, rated current 250 Amps, 1000 turns	
50441	SA200 - closed toroid A type, for RCM enabled power meters, 200 mm inner diameter, rated current 400 Amps, 1000 turns	
50442	GA300 - closed toroid A type, for RCM enabled power meters, 300 mm inner diameter, rated current 630 Amps, 1000 turns	
	Accessories for Closed Toroids	**125**
56055	Magnetic ring/ Iron screen accessory for TA30 toroid sensor	
56056	Magnetic ring/ Iron screen accessory for PA50 toroid sensor	
56057	Magnetic ring/ Iron screen accessory for IA80 toroid sensor	
56058	Magnetic ring/ Iron screen accessory for MA120 toroid sensor	
	Residual Current Monitoring Toroids (Vigirex) - Split Toroids, OA Type	**125**
50420	TOA80 - split toroid OA type, 80 mm inner diameter, rated current 160 Amps, 1000 turns	
50421	TOA120 - split toroid OA type, 120 mm inner diameter, rated current 250 Amps, 1000 turns	
56053	L1 type - rectangular sensor, width 280 x height 115 mm, rated current 1600 Amps, 1000 turns	
56054	L2 type - rectangular sensor, width 470 x height 160 mm, rated current 3200 Amps, 1000 turns	
	0.333V (1/3 Volts), 3-in-1 CTs with RJ45 connectors for PM53x0R LVCT enabled power meter	**126**
METSECTV25006	LVCT Solid core 3 in 1 with RJ45 cable, 25 mm phase center, 60 Amps, 0.333V output	
METSECTV25010	LVCT Solid core 3 in 1 with RJ45 cable, 25 mm phase center, 100 Amps, 0.333V output	
METSECTV25013	LVCT Solid core 3 in 1 with RJ45 cable, 25 mm phase center, 125 Amps, 0.333V output	
METSECTV25016	LVCT Solid core 3 in 1 with RJ45 cable, 25 mm phase center, 160 Amps, 0.333V output	

PowerLogic™ Commercial Reference Numbers

Commercial reference number	Description	Page
METSECTV35006	LVCT Solid core 3 in 1 with RJ45 cable, 35 mm phase center, 60 Amps, 0.333V output	
METSECTV35010	LVCT Solid core 3 in 1 with RJ45 cable, 35 mm phase center, 100 Amps, 0.333V output	
METSECTV35012	LVCT Solid core 3 in 1 with RJ45 cable, 35 mm phase center, 120 Amps, 0.333V output	
METSECTV35013	LVCT Solid core 3 in 1 with RJ45 cable, 35 mm phase center, 125 Amps, 0.333V output	
METSECTV35015	LVCT Solid core 3 in 1 with RJ45 cable, 35 mm phase center, 150 Amps, 0.333V output	
METSECTV35016	LVCT Solid core 3 in 1 with RJ45 cable, 35 mm phase center, 160 Amps, 0.333V output	
METSECTV35020	LVCT Solid core 3 in 1 with RJ45 cable, 35 mm phase center, 200 Amps, 0.333V output	
METSECTV35025	LVCT Solid core 3 in 1 with RJ45 cable, 35 mm phase center, 250 Amps, 0.333V output	
METSECTV45025	LVCT Solid core 3 in 1 with RJ45 cable, 45 mm phase center, 250 Amps, 0.333V output	
METSECTV45030	LVCT Solid core 3 in 1 with RJ45 cable, 45 mm phase center, 300 Amps, 0.333V output	
METSECTV45040	LVCT Solid core 3 in 1 with RJ45 cable, 45 mm phase center, 400 Amps, 0.333V output	
METSECTV45050	LVCT Solid core 3 in 1 with RJ45 cable, 45 mm phase center, 500 Amps, 0.333V output	
METSECTV45060	LVCT Solid core 3 in 1 with RJ45 cable, 45 mm phase center, 600 Amps, 0.333V output	
METSECTV45063	LVCT Solid core 3 in 1 with RJ45 cable, 45 mm phase center, 630 Amps, 0.333V output	
METSECTV29006	LVCT Solid core 3 in 1 with RJ45 cable, 29 mm phase center, 60 Amps, 0.333V output	
METSECTV29010	LVCT Solid core 3 in 1 with RJ45 cable, 29 mm phase center, 100 Amps, 0.333V output	
METSECTV29012	LVCT Solid core 3 in 1 with RJ45 cable, 29 mm phase center, 120 Amps, 0.333V output	
METSECTV29013	LVCT Solid core 3 in 1 with RJ45 cable, 29 mm phase center, 125 Amps, 0.333V output	
METSECTV29015	LVCT Solid core 3 in 1 with RJ45 cable, 29 mm phase center, 150 Amps, 0.333V output	
METSECTV29016	LVCT Solid core 3 in 1 with RJ45 cable, 29 mm phase center, 160 Amps, 0.333V output	
METSECTV29020	LVCT Solid core 3 in 1 with RJ45 cable, 29 mm phase center, 200 Amps, 0.333V output	
METSECTV70080	LVCT Solid core 3 in 1 with RJ45 cable, 70 mm phase center, 800 Amps, 0.333V output	
METSECTV70100	LVCT Solid core 3 in 1 with RJ45 cable, 70 mm phase center, 1000 Amps, 0.333V output	
METSECTV70125	LVCT Solid core 3 in 1 with RJ45 cable, 70 mm phase center, 1250 Amps, 0.333V output	
	Cable	**126**
METSEPM5CAB03	RJ25 cable assembly for interfacing PM5563 meter and PM5RD remote display with 0.3 meter cable length	
METSEPM5CAB1	RJ25 cable assembly for interfacing PM5563 meter and PM5RD remote display with 1.0 meter cable length	
METSEPM5CAB10	RJ25 cable assembly for interfacing PM5563 meter and PM5RD remote display with 10 meter cable length	
METSEPM5CAB3	RJ25 cable assembly for interfacing PM5563 meter and PM5RD remote display with 3 meter cable length	
METSEPM5CAB4	RJ25 cable assembly for interfacing PM5563 meter and PM5RD remote display with 4 meter cable length	
	Other related products	**126**
METSEPM5RD	Remote display unit for PM5563 power meter supplied with mounting bracket, gasket, anti-rotation pin and RJ25 cable METSEPMCABxy	
METSEPM51HK	Hardware kit for PM51xx comprises 2 retainer clips and spare connectors for - Voltage in, Control power in, Digital IO & RS-485	
METSEPM53HK	Hardware kit for PM51xx comprises 2 retainer clips and spare connectors for - Voltage in, Control power in, Digital IO, Relay & RS-485	
METSEPM51_3RSK	Revenue sealing kit for PM51XX & PM53XX	
METSEPM55RSK	Revenue sealing kit for PM55XX	
METSEPM55HK	Hardware kit for PM55xx	
METSEPM5CAB3	Remote Display cable	

Commercial reference number	Description	Page
	PM5350	**128**
METSEPM5350	RS-485 Modbus, THD, 4DI, 2Relay	
METSEPM5350IB	RS-485, 4DI/2Relay, Multi-level alarm, UL480V, 4DI/2Relay	
METSEPM5350PB	RS-485, 4DI/2Relay, Multi-level alarm, UL300V, 4DI/2Relay	
METSEPM5350P	RS-485 Modbus, THD, 31st Individual harmonics, Multi-tariff, 4DI/2Relay	
	Advanced Metering	**135**
	PM8000	**136**
METSEPM8210	96 x 96 panel mount meter, LV DC power	
METSEPM8240	DIN96 panel mount meter	
METSEPM8243	DIN rail mount meter	
METSEPM8244	DIN rail mount meter with remote display	
METSEPM89RD96	Remote display, 3 metre cable, mounting hardware for 30mm hole (nut & centering pin), mounting hardware for DIN96 cutout (92x92mm) adapter plate	
METSEPM8000SK	Terminal covers for utility sealing	
METSEPM8HWK	PM8000 hardware kit	
METSEPM89M2600	Digital I/O module (6 digital inputs & 2 relay outputs)	
METSEPM89M0024	Analog I/O module (4 analog inputs & 2 analog outputs)	
METSEPM8213	DIN rail mount meter, LV DC power.	
METSEPM8214	DIN rail mount meter with remote display, LV DC power.	
METSEPM82401	MID approved panel mount meter.	
METSEPM82403	RMICAN approved panel mount meter.	
METSEPM82404	RMICAN sealed panel mount meter.	
METSEPMRS4854W	4-Wire RS 485 option module	
METSEPMFIBER	Fiber-Ethernet option module	
	ION9000	**145**
METSEION92030	ION9000 meter, DIN mount, no display, hardware kit	
METSEION92040	ION9000 meter, DIN mount, 192 mm display, B2B adapter, hardware kit	
METSEION92043	ION9000 meter, DIN mount, 192 mm display, B2B adapter, hardware kit, Measurement Canada Ready (Canada only)	
METSEION92044	ION9000 meter, DIN mount, 192 mm display, B2B adapter, hardware kit, Measurement Canada Sealed (Canada only)	
METSEION92130	ION9000 Meter, 20-60 Vdc control input, DIN mount, no display, hardware kit	
METSEION92140	ION9000 Meter, 20-60 Vdc control input, DIN mount, 192 mm display, B2B adapter, hardware kit	
METSEION93030	ION9000 meter, LVCS, DIN mount, no display, hardware kit	
METSEION93040	ION9000 meter, LVCS, DIN mount, 192 mm display, B2B adapter, hardware kit	
METSEION93130	ION9000 Meter, LVCS, 20-60 Vdc control power, DIN mount, no display, hardware kit	
METSEION93140	ION9000 Meter, LVCS, 20-60 Vdc control power, DIN mount, 192 mm display, B2B adapter, hardware kit	
METSEION95030	ION9000T meter, HSTC, DIN mount, no display, hardware kit	
METSEION95040	ION9000T meter, HSTC, DIN mount, 192 mm display, B2B adapter, hardware kit	
METSERD192	Remote display, color touchscreen, 192 x 192 mm	
METSEPM89RD96	Remote display, color LCD, 96 x 96 mm	
METSEPM89M2600	I/O module, 2 relay outputs, 6 digital inputs	
METSEPM89M0024	I/O module, 2 analog outputs, 4 analog inputs	
METSE9HWK	ION9000 meter hardware kit – plugs, terminal guards, spare grounding screw, DIN clips	

PowerLogic™ Commercial Reference Numbers

Commercial reference number	Description	Page
METSE9CTHWK	ION9000 Current Input hardware kit - terminal screws, CT covers	
METSERD192HWK	RD192 remote display hardware kit	
METSE9B2BMA	ION9000 B2B (back to back) mounting adapter	
METSE9HWKLVCS	ION9000 hardware kit for LVCS	
METSE9USBK	ION9000 USB cover hardware kit	
METSE7X4MAK	ION7X50 mounting adapter kit	
METSEPMRS4854W	4-Wire RS 485 option module	
METSEPMFIBER	Fiber-Ethernet option module	
	Advanced Utility Metering	**158**
	ION7400	**159**
METSEION7400	ION7400 Panel mount meter (integrated display with optical port and 2 energy pulse LEDs)	
METSEION7410	ION7400 Panel mount meter (integrated display with optical port and 2 energy pulse LEDs) 20-60 V DC control power	
METSEION7403	DIN rail mount - utility meter base	
METSEION7413	DIN rail mount - utility meter base 20-60 V DC control power	
METSEION74001	MID approved panel mount meter	
METSEPM89RD96	Remote display, 3 m cable, mounting hardware for 30 mm hole and DIN96 cutout (92 x 92 mm) adapter plate	
METSEPM89M2600	Digital I/O module (6 digital inputs (wetted) & 2 relay outputs)	
METSEPM89M0024	Analog I/O module (4 analog inputs & 2 analog outputs)	
METSEPM8000SK	Revenue sealing kit	
METSECAB10	Display Cable, 10 m	
METSEPMRS4854W	4-Wire RS-485 option module	
METSEPMFIBER	Fiber-Ethernet option module	
	ION8650	**169**
M8650A	ION8650A meter	
M8650B	ION8650B meter	
M8650C	ION8650C meter	
A-BASE-ADAPTER-9	Form 9S to Form 9A adapter	
A-BASE-ADAPTER-35	Form 35S to Form 35A adapter	
CBL-8X00BRKOUT	Break out cable 1.5 m	
CBL-8X00IOE5FT	Cable para I/O expander 1.5 m	
CBL-8X00IOE15FT	I/O extension cable 4.6 m	
CBL-8XX0-BOP-IOBOX	Cat.3 25PR UTP cable 205 m reel	
	Multi-Circuit Metering	**179**
	HDPM6000 Head Unit	**182**
METSEHDPM6S480VC	HDPM 50 / 60 Hz up to 480 V	
	HDPM6000B Busway Modules	**184**
METSEHDPM6BT4	HDPM 4 Ckt Busway Module with Busway Tap Box mount	
METSEHDPM6BT8	HDPM 8 Ckt Busway Module with Busway Tap Box mount	
METSEHDPM6BT8DIN	HDPM 8 Ckt Busway Module with DIN mount	
	HDPM6000R Retrofit Modules	
METSEHDPM6R24	HDPMR 24 Ckt Module	
METSEHDPM6R24WF	HDPMR 24 Ckt Module WFC	
METSEHDPM6R42	HDPMR 42 Ckt Module	
METSEHDPM6R42WF	HDPMR 42 Ckt Module WFC	
METSEHDPM6R84	HDPMR 84 Ckt Module	
METSEHDPM6R84WF	HDPMR 84 Ckt Module WFC	
	HDPM6000S Strip Modules	
METSEHDPM6S42W	HDPM Strip Left and Right Set for 42 Ckts WFC	
METSEHDPM6S42	HDPM Strip Left and Right Set for 42 Ckts	
METSEHDPM6S21WF	HDPM Strip Right 21 Ckt WFC	
METSEHDPM6S21R	HDPM Strip Right 21 Ckt	
METSEHDPM6S21WH	HDPM Strip Left 21 Ckt WFC	
METSEHDPM6S21L	HDPM Strip Left 21 Ckt	

Commercial reference number	Description	Page
	HDPM6000 Temperature and Humidity Sensors	
METSEHDPMTEMP08B	HDPM Temperature Sensor with 8ft Blue Cable	
METSEHDPMTEMP08Y	HDPM Temperature Sensor with 8ft Yellow Cable	
METSEHDPMTEMP12B	HDPM Temperature Sensor with 12ft Blue Cable	
METSEHDPMTEMP12Y	HDPM Temperature Sensor with12ft Yellow Cable	
METSEHDPMTEMP25B	HDPM Temperature Sensor with 25ft Blue Cable	
METSEHDPMTEMP25Y	HDPM Temperature Sensor with 25ft Yellow Cable	
METSEHDPMTEMPHM25B	HDPM Temperature and Humidity Sensor with 25ft Blue Cable	
METSEHDPMTEMPHM25Y	HDPM Temperature and Humidity Sensor with 25ft Yellow Cable	
METSEHDPMTEMPHM06B	HDPM Temperature and Humidity Sensor with 25ft Yellow Cable	
METSEHDPMTEMPHM06Y	HDPM Temperature and Humidity Sensor with 6ft Yellow Cable	
	HDPM6000 I/O Module	**188**
METSEHDPM6IO	HDPM I/O Module	
METSEHDPM6DI	Expanded Input Module 2.0, 24 Channel	
	HDPM6000 CT's	
HDPM6000 CT's	Refer to HDPM6000 CT manual for full list	
	HMI Displays	
METSEHDPM6HMI4	HDPM 4.3" Color Touchscreen HMI Display	
METSEHDPM6HMI7	HDPM 7" Color Touchscreen HMI Display	
	Power Supplies	
METSEHDPM6PSV240*	HDPM PS 24 VDC 60 watt	
METSEHDPM6PSV500*	HDPM PS 24 VDC 90 watt	
***Phoenix Contact power supply.**		
	BCPM (Branch Circuit Power Meter)	**192**
BCPMA084S	84-circuit solid-core power & energy meter, 100 A CTs (4 strips), 19.05 mm spacing	
BCPMA184S	84-circuit solid-core power & energy meter, 100 A CTs (4 strips), 25.4 mm spacing	
BCPMA042S	42-circuit solid-core power & energy meter, 100 A CTs (2 strips), 19.05 mm spacing	
BCPMA142S	42-circuit solid-core power & energy meter, 100 A CTs (2 strips), 25.4 mm spacing	
BCPMA224S	24-circuit solid-core power & energy meter, 100 A CTs (2 strips), 18 mm spacing	
BCPMA236S	36-circuit solid-core power & energy meter, 100 A CTs (2 strips), 18 mm spacing	
BCPMA242S	42-circuit solid-iEM2000core power & energy meter, 100 A CTs (2 strips), 18 mm spacing	
BCPMA248S	48-circuit solid-core power & energy meter, 100 A CTs (4 strips), 18 mm spacing	
BCPMA272S	72-circuit solid-core power & energy meter, 100 A CTs (4 strips), 18 mm spacing	
BCPMA284S	84-circuit solid-core power & energy meter, 100 A CTs (4 strips), 18 mm spacing	
BCPMB084S	84-circuit solid-core branch current, mains power meter, 100 A CTs (4 strips), 19.05 mm spacing	
BCPMB184S	84-circuit solid-core branch current, mains power meter, 100 A CTs (4 strips), 25.4 mm spacing	
BCPMB042S	42-circuit solid-core branch current, mains power meter, 100 A CTs (2 strips), 19.05 mm spacing	
BCPMB142S	42-circuit solid-core branch current, mains power meter, 100 A CTs (2 strips), 25.4 mm spacing	
BCPMB224S	24-circuit solid-core branch current, mains power meter, 100 A CTs (2 strips), 18 mm spacing	
BCPMB236S	36-circuit solid-core branch current, mains power meter, 100 A CTs (2 strips), 18 mm spacing	
BCPMB242S	42-circuit solid-core branch current, mains power meter, 100 A CTs (2 strips), 18 mm spacing	
BCPMB248S	48-circuit solid-core branch current, mains power meter, 100 A CTs (4 strips), 18 mm spacing	

For any CT rating not available in the reference list, please contact the Schneider Electric sales representative.

PowerLogic™ Commercial Reference Numbers

Commercial reference number	Description	Page
BCPMB272S	72-circuit solid-core branch current, mains power meter, 100 A CTs (4 strips), 18 mm spacing	
BCPMB284S	84-circuit solid-core branch current, mains power meter, 100 A CTs (4 strips), 18 mm spacing	
BCPMC084S	84-circuit solid-core branch current meter, 100 A CTs (4 strips), 19.05 mm spacing	
BCPMC184S	84-circuit solid-core branch current meter, 100 A CTs (4 strips), 25.4 mm spacing	
BCPMC042S	42-circuit solid-core branch current meter, 100 A CTs (2 strips), 19.05 mm spacing	
BCPMC142S	42-circuit solid-core branch current meter, 100 A CTs (2 strips), 25.4 mm spacing	
BCPMC224S	24-circuit solid-core branch current meter, 100 A CTs (2 strips), 18 mm spacing	
BCPMC236S	36-circuit solid-core branch current meter, 100 A CTs (2 strips), 18 mm spacing	
BCPMC242S	42-circuit solid-core branch current meter, 100 A CTs (2 strips), 18 mm spacing	
BCPMC248S	48-circuit solid-core branch current meter, 100 A CTs (4 strips), 18 mm spacing	
BCPME042S	42-circuit solid-core power & energy meter w/Ethernet, 100 A CTs (2 strips), 19.05 mm spacing	
BCPME084S	84-circuit solid-core power & energy meter w/Ethernet, 100 A CTs (4 strips), 19.05 mm spacing	
BCPME142S	42-circuit solid-core power & energy meter w/Ethernet, 100 A CTs (2 strips), 25.4 mm spacing	
BCPME184S	84-circuit solid-core power & energy meter w/Ethernet, 100 A CTs (4 strips), 25.4 mm spacing	
BCPME224S	24-circuit solid-core power & energy meter w/Ethernet, 100 A CTs (2 strips), 18 mm spacing	
BCPME236S	36-circuit solid-core power & energy meter w/Ethernet, 100 A CTs (2 strips), 18 mm spacing	
BCPME242S	42-circuit solid-core power & energy meter w/Ethernet, 100 A CTs (2 strips), 18 mm spacing	
BCPME248S	48-circuit solid-core power & energy meter w/Ethernet, 100 A CTs (4 strips), 18 mm spacing	
BCPME272S	72-circuit solid-core power & energy meter w/Ethernet, 100 A CTs (4 strips), 18 mm spacing	
BCPME284S	84-circuit solid-core power & energy meter w/Ethernet, 100 A CTs (4 strips), 18 mm spacing	
BCPMSCA1S	42-circuit split-core power and energy meter, CTs and cables sold separately	
BCPMSCA2S	84-circuit split-core power and energy meter, CTs and cables sold separately	
BCPMSCA30S	30-circuit split-core power and energy meter, (30) 50 A CTs & (2) 1.21 m cables	
BCPMSCA42S	42-circuit split-core power and energy meter, (42) 50 A CTs & (2) 1.21 m cables	
BCPMSCA60S	60-circuit split-core power and energy meter, (60) 50 A CTs & (4) 1.21 m cables	
BCPMSCA84S	84-circuit split-core power and energy meter, with (84) 50 A CTs & (4) 1.21 m cables	
BCPMSCB1S	42-circuit split-core branch current, mains power meter, CTs and cables sold separately	
BCPMSCB2S	84-circuit split-core branch current, mains power meter, CTs and cables sold separately	
BCPMSCB30S	30-circuit split-core branch current, mains power meter, (30) 50 A CTs & (2) 1.21 m cables	
BCPMSCB42S	42-circuit split-core branch current, mains power meter, (42) 50 A CTs & (2) 1.21 m cables	
BCPMSCB60S	60-circuit split-core branch current, mains power meter, (60) 50 A CTs & (4) 1.21 m cables	
BCPMSCBY63S	42-circuit split-core branch current, mains, all boards on backplate, CTs and cables sold separately	
BCPMSCC1S	42-circuit split-core current meter, CTs and cables sold separately	
BCPMSCC2S	84-circuit split-core current meter, CTs and cables sold separately	
BCPMSCC30S	30-circuit split-core current meter, (30) 50 A CTs & (2) 1.21 m cables	

Commercial reference number	Description	Page
BCPMSCC42S	42 circuit split-core current meter, (42) 50 A CTs & (2) 1.21 m cables	
BCPMSCC60S	60-circuit split-core current meter, (60) 50 A CTs & (4) 1.21 m cables	
BCPMSCCY63S	42-circuit split-core current meter, all boards on backplate, CTs and cables sold separately	
BCPMSCC84S	84-circuit split-core current meter, (84) 50 A CTs & (4) 1.21 m cables	
BCPMSCE1S	42-circuit split-core power and energy meter w/ Ethernet, CTs and cables sold separately	
BCPMSCE2S	84-circuit split-core power and energy meter w/ Ethernet, CTs and cables sold separately	
BCPMSCE30S	30-circuit split-core power and energy meter w/ Ethernet, (30) 50A CTs & (2) 1.21 m cables	
BCPMSCE42S	42-circuit split-core power and energy meter w/ Ethernet, (42) 50 A CTs & (2) 1.21 m cables	
BCPMSCE60S	60-circuit split-core power and energy meter w/ Ethernet, (60) 50 A CTs & (4) 1.21 m cables	
BCPMSCE84S	84-circuit split-core power and energy meter w/ Ethernet, (84) 50 A CTs & (4) 1.21 m cables	
BCPMSCADPBS	BCPM adapter boards, quantity 2, for split core BCPM	
BCPMSCCT0	BCPM 50 A split core CTs, Quantity 6, 1.8 m lead lengths	
BCPMSCCT0R20	BCPM 50 A split core CTs, quantity 6, 6 m lead lengths	
BCPMSCCT1	BCPM 100 A split core CTs, Quantity 6, 1.8 m lead lengths	
BCPMSCCT1R20	BCPM 100 A split core CTs, Quantity 6, 6 m lead lengths	
BCPMSCCT3	BCPM 200 A split core CTs, Quantity 1, 1.8 m lead lengths	
BCPMSCCT3R20	BCPM 200 A split core CTs, Quantity 1, 6 m lead lengths	
BCPMCOVERS	BCPM circuit board cover	
BCPMREPAIR	CT repair kit for solid core BCPM (includes one CT)	
CBL008	Flat Ribbon cable for BCPM, length = 0.45 m	
CBL016	Flat Ribbon cable for BCPM, length = 1.2 m	
CBL017	Flat Ribbon cable for BCPM, length = 1.5 m	
CBL018	Flat Ribbon cable for BCPM, length = 1.8 m	
CBL019	Flat Ribbon cable for BCPM, length = 2.4 m	
CBL020	Flat Ribbon cable for BCPM, length = 3.0 m	
CBL021	Flat Ribbon cable for BCPM, length = 6.1 m	
CBL022	Round Ribbon cable for BCPM, length = 1.2 m	
CBL023	Round Ribbon cable for BCPM, length = 3 m	
CBL024	Round Ribbon cable for BCPM, length = 6.1 m	
CBL031	Round Ribbon cable for BCPM, length = 0.5 m	
CBL033	Round Ribbon cable for BCPM, length = 0.8 m	
LVCT00050S	50 A 10 mm x 11 mm	
LVCT00101S	100 A 16 mm x 20 mm	
LVCT00102S	100 A 30 mm x 31 mm	
LVCT00202S	200 A 30 mm x 31 mm	
LVCT00302S	300 A 30 mm x 31 mm	
LVCT00403S	400 A 62 mm x 73 mm	
LVCT00603S	600 A 62 mm x 73 mm	
LVCT00803S	800 A 62 mm x 73 mm	
LVCT00804S	800 A 62 mm x 139 mm	
LVCT01004S	1000 A 62 mm x 139 mm	
LVCT01204S	1200 A 62 mm x 139 mm	
LVCT01604S	1600 A 62 mm x 139 mm	
LVCT02004S	2000 A 62 mm x 139 mm	
LVCT02404S	2400 A 62 mm x 139 mm	
LVCT20050S	50 A 10 mm	
LVCT20100S	100 A 10 mm	
LVCT20202S	200 A 25 mm	

PowerLogic™ Commercial Reference Numbers

Commercial reference number	Description	Page
	EM4000	**206**
METSEEM403316	24 x 333 mV inputs, 120V control power 60 Hz	
METSEEM403336	24 x 333 mV inputs, 277V control power 60 Hz	
METSEEM408016	24 x 80 mA inputs, 120V control power 60 Hz	
METSEEM408036	24 x 80 mA inputs, 277V control power 60 Hz	
METSECONV580	EM4000 5 A : 80 mA converter	
METSEPTMOD480	480 V PT Module for EM4X00 meter	
METSEPTMOD347600	347 V/600 V PT Module for EM4X00 meter	
METSECTTERM	EM4000 CT termination module	
METSECTSHORT	EM4000 CT shorting module	
METSECT80200	EM4000 solid-core CT 200 A / 80 mA secondary	
METSECT80400	EM4000 solid-core CT 400 A / 80 mA secondary	
METSECT80600	EM4000 solid-core CT 600 A / 80 mA secondary	
	EM4800	**215**
METSEEM480525	24 x 5 A inputs, 230/240 V control power, 50 Hz	
METSEEM480516	24 x 5 A inputs, 120 V control power, 60 Hz	
METSEEM483325	24 x 333 mV inputs, 230/240 V control power, 50 Hz	
METSEEM483316	24 x 333 mV inputs, 120 V control power, 60 Hz	
METSEEM488016	24 x 80 mA inputs, 120 V control power, 60 Hz	
METSEEM488026	24 x 80 mA inputs, 230/240 V control power, 50 Hz	
METSECONV580	EM4000 5 A : 80 mA converter	
METSEPTMOD480	480 V PT Module for EM4X00 meter	
METSEPTMOD347600	347 V/600 V PT Module for EM4X00 meter	
METSECTTERM	EM4000 CT termination module	
METSECTSHORT	EM4000 CT shorting module	
	EM4900	**220**
METSEEM4904A	EM4900 (4) 3-phase meters - Modbus RTU only	
METSEEM4908A	EM4900 (8) 3-phase meters - Modbus RTU only	
METSEEM4914A	EM4900 (14) 3-phase meters - Modbus RTU only	
METSEEM4928A	EM4900 (28) 3-phase meters - Modbus RTU only	
METSEEM4904E	EM4900 (4) 3-phase meters - Ethernet and Serial (Modbus, BACnet & SNMP)	
METSEEM4908E	EM4900 (8) 3-phase meters - Ethernet and Serial (Modbus, BACnet & SNMP)	
METSEEM4914E	EM4900 (14) 3-phase meters - Ethernet and Serial (Modbus, BACnet & SNMP)	
METSEEM4928E	EM4900 (28) 3-phase meters - Ethernet and Serial (Modbus, BACnet & SNMP)	
	Retrofit Products	**229**
	EM3500	**230**
METSEEM3502	EM3502 Pulse out only	
METSEEM3550	EM3550 Modbus - 2 quadrant	
METSEEM3555	EM3555 Modbus - 4 quadrant with logging	
METSEEM3560	EM3560 BACnet with logging	
METSEEM3502A	EM3502A Pulse Rope CT model	
METSEEM3550A	EM3550A Modbus Rope CT Model	
METSEEM3560A	EM3560A BACnet w/ logging Rope CT Model	
METSEEM3561	EM3561 BACnet without logging	
METSEEM3561A	EM3561A BACnet without loggingRope CT Model	
	EM4200	**236**
METSEEM4235	Enercept, Class 0.2S meter, Modbus/BACnet communication, Uni-Directional/Bi-Directional, RS-485, IEC wire code, single circuit, Modbus/BACnet	
METSEEM4236	Enercept, Class 0.2S meter, Modbus/BACnet communication, Uni-Directional/Bi-Directional, RS-485, ANSI wire code, single circuit, Modbus/BACnet	
	Insulation Monitoring Devices	**242**
	Vigilohm Insulation Monitoring	**248**
50159	ZX impedance	
50168	HOSPITAL REMOTE PANEL	
50169	CARDEW Holder	
50170	CARDEW 250V CA Surge arestor	

Commercial reference number	Description	Page
50171	CARDEW 440V CA Surge arestor	
50172	CARDEW 660V CA Surge arestor	
50183	CARDEW 1000V CA Surge arestor	
50248	PHT1000	
50278	XRM	
50281	XGR 115-127VCA	
50282	XGR 220-240VCA	
50283	XGR 380-415VCA	
50420	TOA80 open toroid	
50421	TOA120 open toroid	
50437	TA30 toroid	
50438	PA50 toroid	
50439	IA80 toroid	
50440	MA120 toroid	
50441	SA200 toroid	
50442	GA300 toroid	
50494	XP15 Open CT for XRM	
50498	XP50 Open CT for XRM	
50499	XP100 Open CT for XRM	
1460872	Voltage Adaptor P1N	
IMDCP100	Current Probe 100mm	
IMDCP15	Current Probe 15mm	
IMDCP50	Current Probe 50mm	
IMDIFL12	Ins Fault locator Entry	
IMDIFL12C	Ins Fault locator Entry Com	
IMDIFL12H	Ins Fault locator HC	
IMDIFL12L	Ins Fault locator Entry 24-48VDC	
IMDIFL12LMC	Ins Fault locator Adv 24-48VDC	
IMDIFL12MC	Ins Fault locator Adv	
IMDIFL12MCN	Ins Fault locator Adv	
IMDIFL12MCT	Ins Fault locator Adv Tropic	
IMDIFL12VA1T	Voltage Adaptor for IFL12MC series_1000V	
IMDIFLK1	Mobile Ins Fault locator 1 feeder	
IMDIFLK12	Mobile Ins Fault locator 12 feeders	
IMD-IM10	IM10	
IMD-IM10-H	IM10 H	
IMDIM15H	IM15 H	
IMD-IM20	IM20	
IMD-IM20-1700	Voltage Adaptor for IM20	
IMD-IM20-H	IM20 H	
IMD-IM400	IM400	
IMD-IM400-1700	Voltage adaptor for IM400	
IMD-IM400-1700C	Voltage adaptor for IM400 Conformal coated	
IMD-IM400C	IM400C	
IMDIM400L	IM400L	
IMDIM400N	IM400N	
IMDIM400LTHR	IM400LTHR	
IMDIM400THR	IM400THR	
IMDIM400THRN	IM400THRN	
IMD-IM400VA2	Voltage adaptor for PV application Coated	
IMD-IM9	IM9	
IMD-IM9-OL	IM9OL	
IMD-IT-S63-H	Single Phase, Isolated Transformer, 6,3KVA	
IMD-IT-S80-H	Single Phase, Isolated Transformer, 8KVA	
IMD-IT-S100-H	Single Phase, Isolated Transformer, 10KVA	
IMDLRDH	Remote Display Hospital	

PowerLogic™ Commercial Reference Numbers

Commercial reference number	Description	Page
	EcoStruxure™ Panel Server	**249**
	Panel Server Entry	**251**
PAS400	Panel Server Entry 110..277 V AC/DC	
	Panel Server Universal	**254**
PAS600L	Panel Server Universal with 24 V DC power supply	
PAS600T	Panel Server Universal with 100-240 V AC/DC power supply	
PAS600	Panel Server Universal with 100-277 V AC/DC power supply	
	Panel Server Advanced	**257**
PAS800L	Panel Server Advanced with 24 V DC power supply	
PAS800P	Panel Server Advanced with PoE power supply	
PAS800	Panel Server Advanced with 100-277 V AC/DC power supply	

For any enclosure or product configuration not listed, please see your Schneider Electric Representative for complete ordering information.

www.se.com

Schneider Electric Industries SAS
35, Rue Joseph Monier
CS 30323
92506 Rueil Malmaison Cedex

RCS Nanterre 954 503 439
Capital social 928 298 512 €
www.se.com

July 2024
PowerLogic™ Catalog
PLSED309005EN

© 2024 - Schneider Electric. All rights reserved.
All trademarks are owned by Schneider Electric Industries SAS or its affiliated companies.

As standards, specifications and designs develop from time to time, please ask for confirmation of the information given in this document.

Over 75 % of Schneider Electric products have been awarded the Green Premium ecolabel.