853 LED Permanent Beacon

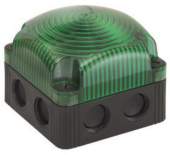



TECHNICAL SPECIFICATIONS/ORDER SPECIFICATIONS:

Dimensions (L x H x W):	85 mm x 85 mm x 72 mm			
Housing:	PP-GF, black			
Lens:	PC, transparent			
Connection:	Screw terminal 0.5 - 1.5 mm² CAGE CLAMP® 0.5 to 1.5 mm² (Multicolour, RGY)			
Fixing:	Wall, base and ceiling mounting			
Possible colours:	Red, yellow, green, white, blue, violet, turquoise (multicolour)			
Equipment:	Elastic self-sealing membranes for cable entry without tools Eight integrated M20 threads, no nuts required Optional use of a cable gland, thread length of cable gland ≤ 9 mm (accessory)			
Assembly:	Incl. snap-on fixing bracket (optional use)			
Life duration:	Up to 50,000 hrs			
LED Permanent Beacon				
Voltage:	12 V DC	24 V DC	48 V AC	115-230 V AC
Current consumption:	< 180 mA	< 80 mA	< 35 mA	< 40 mA
red	**853 100 54**	**853 100 55**	**853 100 66**	**853 100 60**
green	**853 200 54**	**853 200 55**	**853 200 66**	**853 200 60**
yellow	**853 300 54**	**853 300 55**	**853 300 66**	**853 300 60**
clear	**853 400 54**	**853 400 55**	**853 400 66**	**853 400 60**
blue	**853 500 54**	**853 500 55**	**853 500 66**	**853 500 60**
LED Permanent Beacon (multicolour)				
Voltage:		24 V DC		115-230 V AC
Current consumption:		< 150 mA		< 35 mA
Multicolour		**853 480 55**		-
RGY (red, green, yellow)		-		**853 480 60**



LED Permanent Light multicolour: 7 colours in one beacon: red, yellow, green, clear, blue, violet, turquoise

ACCESSORIES:

Connector for traffic light combinations	**975 853 01**
Cable gland M20 x 1.5 mm, 8mm thread length	**975 853 02**

TECHNICAL DIAGRAM:

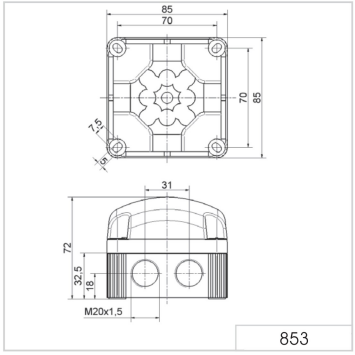

853

Signalisation index	
LED Permanent Light	5

24 V

PLC

853 LED Double Flash Beacon



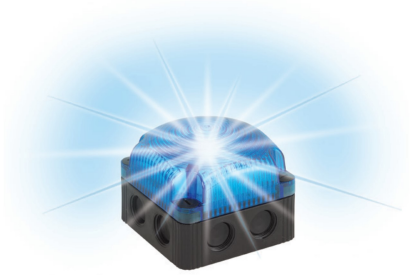

Intense double flash effect
with low power consumption

ⓘ TECHNICAL SPECIFICATIONS/ORDER SPECIFICATIONS:

Dimensions (L x H x W):	85 mm x 85 mm x 72 mm			
Housing:	PP-GF, black			
Lens:	PC, transparent			
Connection:	Screw terminal 0.5 - 1.5 mm^2			
Fixing:	Wall, base and ceiling mounting			
Equipment:	Elastic self-sealing membranes for cable entry without tools Eight integrated M20 threads, no nuts required Optional use of a cable gland, thread length of cable gland ≤ 9 mm (accessory)			
Assembly:	Incl. snap-on fixing bracket (optional use)			
Life duration:	Up to 50,000 hrs			
Voltage:	12 V DC	24 V DC	48 V AC	115-230 V AC
Current consumption:	< 100 mA	< 80 mA	< 95 mA	< 180 mA
red	**853 110 54**	**853 110 55**	**853 110 66**	**853 110 60**
green	**853 210 54**	**853 210 55**	**853 210 66**	**853 210 60**
yellow	**853 310 54**	**853 310 55**	**853 310 66**	**853 310 60**
clear	**853 410 54**	**853 410 55**	**853 410 66**	**853 410 60**
blue	**853 510 54**	**853 510 55**	**853 510 66**	**853 510 60**

🛠 ACCESSORIES:

Connector for traffic light combinations	**975 853 01**
Cable gland M20 x 1.5 mm, 8mm thread length	**975 853 02**

↔ TECHNICAL DIAGRAM:

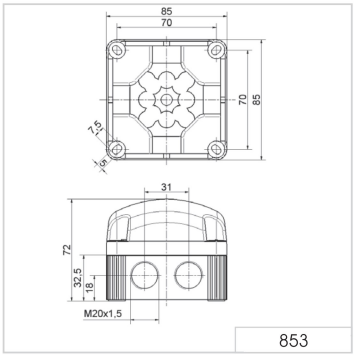

853

Signalisation index	
LED Flashing Light	6

CE · 160 g · IP67 · +50°C / -25°C · 24 V · PLC

853 LED EVS Beacon





The innovative connector (accessory) enables traffic light combinations to be created in a matter of seconds

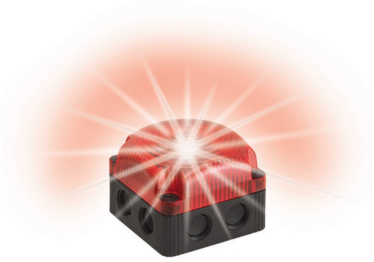

The "EVS" light signal ensures a maximum attention-grabbing effect

ⓘ TECHNICAL SPECIFICATIONS/ORDER SPECIFICATIONS:

Dimensions (L x H x W):	85 mm x 85 mm x 72 mm
Housing:	PP-GF, black
Lens:	PC, transparent
Connection:	Screw terminal 0.5 - 1.5 mm^2
Cable entry:	Cable diameter max. 8 mm, optional cable gland M20 (accessory)
Fixing:	Wall, base and ceiling mounting
Equipment:	Elastic self-sealing membranes for cable entry without tools Eight integrated M20 threads, no nuts required Optional use of a cable gland, thread length of cable gland ≤ 9 mm (accessory)
Assembly:	Incl. snap-on fixing bracket (optional use)
Life duration:	Up to 50,000 hrs

Voltage:	12 V DC	24 V DC	48 V AC	115-230 V AC
Current consumption:	< 400 mA	< 200 mA	< 95 mA	< 160 mA
red	**853 120 54**	**853 120 55**	**853 120 66**	**853 120 60**
green	**853 220 54**	**853 220 55**	**853 220 66**	**853 220 60**
yellow	**853 320 54**	**853 320 55**	**853 320 66**	**853 320 60**
clear	**853 420 54**	**853 420 55**	**853 420 66**	**853 420 60**
blue	**853 520 54**	**853 520 55**	**853 520 66**	**853 520 60**

🛠 ACCESSORIES:

Connector for traffic light combinations	**975 853 01**
Cable gland M20 x 1.5 mm, 8mm thread length	**975 853 02**

↔ TECHNICAL DIAGRAM:

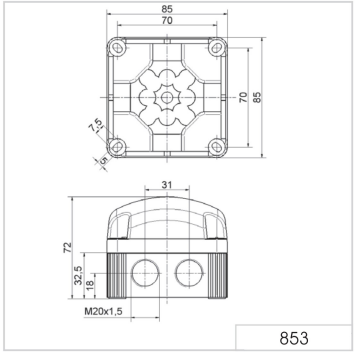

Signalisation index	
LED EVS Light	8

CE · 160 g · IP67 · +50°C / -25°C · 24 V PLC

853 LED Traffic Light



The innovative connector (accessory) enables traffic light combinations to be created in a matter of seconds



Three highly visible light effects are available



The LED beacon can be used with the sounder

TECHNICAL SPECIFICATIONS/ORDER SPECIFICATIONS:

Dimensions (L x H x W):	85 mm x 85 mm x 72 mm
Housing:	PP-GF, black
Lens:	PC, transparent
Connection:	Screw terminal 0.5 - 1.5 mm² CAGE CLAMP® 0.5 - 1.5 mm² (Multicolour, RGY)
Fixing:	Wall, base and ceiling mounting
Possible colours:	Red, green, yellow, clear, blue
Operating voltage:	12 V DC, 24 V DC, 115-230 V AC
Current consumption:	Max. 80 mA at 24 V (LED Permanent Beacon) Max. 80 mA at 24 V (LED Double Flash Beacon) Max. 200 mA at 24 V (LED EVS Beacon) Max. 150 mA at 24 V (Multicolour)
Equipment:	Eight self-sealing membranes for cable entry without tools Eight integrated M20 threads, no nuts required Optional use of a cable gland, thread length of cable gland ≤ 9 mm (accessory)
Assembly:	Incl. snap-on fixing bracket (optional use)
Life duration:	Up to 50,000 hrs

LED Permanent Beacon 853	**see page 122**
LED Permanent Beacon 853 (multicolour)	**see page 122**
LED Permanent Beacon 853 (RGY)	**see page 122**
LED Double Flash Beacon 853	**see page 123**
LED EVS Beacon 853	**see page 124**
Sounder 153	**see next page**

ACCESSORIES:

Connector for traffic light combinations	**975 853 01**
Cable gland M20 x 1.5 mm, 8mm thread length	**975 853 02**

TECHNICAL DIAGRAM:

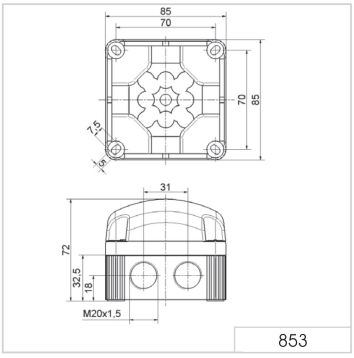

853

853 X00 XX | 853 X10 XX | 853 X20 XX | 24 V

135 g | 130 g | 130 g | IP67 | +50°C -25°C | PLC

853/153 Sounder/ LED Beacon Combination





The innovative connector (accessory) enables traffic light combinations to be created in a matter of seconds

TECHNICAL SPECIFICATIONS/ORDER SPECIFICATIONS:

Dimensions (L x H x W):	85 mm x 85 mm x 72 mm			
Housing:	PP-GF, black			
Lens:	LED Beacon 853: PC, transparent Sounder 153: PC, tinted black			
Connection:	Screw terminal 0.5 - 1.5 mm^2			
Cable entry:	Cable diameter max. 8 mm, optional Cable gland M20 (accessory)			
Fixing:	Wall and ceiling mounting			
Current consumption:	Max. 200 mA at 24 V			
Equipment:	Eight self-sealing membranes for cable entry without tools Eight integrated M20 threads, no nuts required Optional use of a cable gland, thread length of cable gland ≤ 9 mm (accessory)			
Assembly:	Incl. snap-on fixing bracket (optional use)			
Voltage:	12 V DC	24 V DC	48 V AC	115-230 V AC
Current consumption:	70 mA	120 mA	150 mA	75 mA (115 V) 150 mA (230 V)
Order no.:	**153 000 54**	**153 000 55**	**153 000 66**	**153 000 60**

The technical specifications and order specifications of the LED Beacons can be found at www.werma.com or on page 122 (LED Permanant Beacon), page 123 (LED Double Flash Beacon) and page 124 (LED EVS Beacon).

ACCESSORIES:

Connector for traffic light combinations	**975 853 01**
Cable gland M20 x 1.5 mm, 8mm thread length	**975 853 02**

TONE TYPES AND FREQUENCIES:

Tone	Tone type	Tone	Tone type
1	Continous tone (c. 3000 Hz)	5	800 - 970 Hz rising @ 1 H
2	Horn tone (c. 110 Hz)	6	2400 - 2850 Hz rising @ 7 Hz
3	1 Hz tone (c. 3,0 kHz)	7	1200 - 500 Hz falling @ 1 Hz
4	20 Hz whistle tone (c. 3,0 kHz)	8	Alternating tone 800 Hz/1200 Hz@1 Hz

TECHNICAL DIAGRAM:

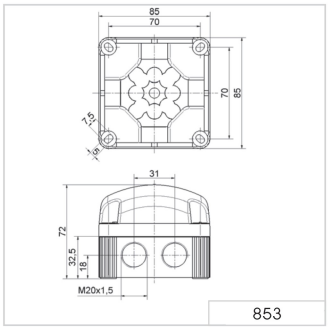

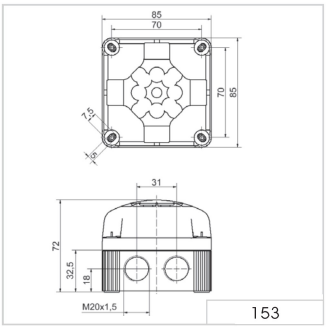

Signalistion index	
Multi-tone siren	7

12 V, 24 V 48 V, 115-230 V

160 g | IP65 | +50°C -25°C | 105 dB | 8 | 1 | PLC