PB121319.eps



GV3L25

PB121320.eps



GV3L401

PB121321.eps



GV3L326

Motor circuit breakers from 11 to 45 kW

GV3L: control by rotary knob, connection by EverLink® BTR screw connectors

Standard power ratings of 3-phase motors 50/60 Hz in category AC-3									Magnetic protection rating	Tripping current Id ± 20 %	Use in association with thermal overload relay (class 10 A)	Reference
400/415 V			500 V			690 V						
P	Icu	Ics (1)	P	Icu	Ics (1)	P	Icu	Ics (1)				
kW	kA		kW	kA		kW	kA		A	A		
11	100	100	**15**	12	50	**18.5**	6	50	25	350	LRD325	**GV3L25**
15	100	100	**18.5**	12	50	**22**	6	50	32	448	LRD332	**GV3L32**
18.5	50	100	**22**	12	50	**37**	6	50	40	560	LRD340	**GV3L40**
22	50	100	**30**	12	50	**45**	6	50	50	700	LRD350	**GV3L50**
30	50	100	**37**	12	50	**55**	6	50	65	910	LRD365	**GV3L65**
37	50	60	**45**	12	50	**55**	6	50	73	1120	LRD380	**GV3L73**
45	50	60	**45**	12	50	**55**	6	50	80	1120	LRD380	**GV3L80**(2)

Connection by EverLink® BTR screw connectors, for assembly with a contactor

To assemble a **GV3L25** to **L73** circuit breaker with an **LC1D40A** to **D80A** contactor, it is possible to use the circuit breaker supplied without downstream EverLink® power terminal block. To order this product, add the digit **1** to the end of the references selected above. Example: **GV3L73** becomes **GV3L731**. Do not use direct mounting between **GV3L80** and **LC1D80A** because of potential overheating, use cable link.

Connection by lugs

To order these circuit breakers with connection by lugs, add the digit **6** to the end of reference selected above. Example: **GV3L32** becomes **GV3L326**.

(1) As % of Icu. Associated current limiter or fuses, where required.
(2) 750 A Lock Rotor Current max.
★ > 100 kA.

PB116862.eps



GV3P80

PB121322.eps



GV3P731

PB121323.eps



GV3P736

Motor circuit breakers up to 45 kW / 400 V

Standard power ratings of 3-phase motors 50/60 Hz in category AC-3									Setting range of thermal trips (2)	Magnetic tripping current Id ± 20 %	Reference
400/415 V			500 V			690 V					
P	Icu	Ics (1)	P	Icu	Ics (1)	P	Icu	Ics (1)			
kW	kA	%	kW	kA	%	kW	kA	%	A	A	
GV3P: control by rotary knob											
Connection by EverLink® BTR screw connectors (3)											
5.5	100	100	**7.5**	12	50	**11**	6	50	9…13	182	**GV3P13**
7.5	100	100	**9**	12	50	**15**	6	50	12…18	252	**GV3P18**
11	100	100	**15**	12	50	**18.5**	6	50	17…25	350	**GV3P25**
15	100	100	**18.5**	12	50	**22**	6	50	23…32	448	**GV3P32**
18.5	50	100	**22**	12	50	**37**	6	50	30…40	560	**GV3P40**
22	50	100	**30**	12	50	**45**	6	50	37…50	700	**GV3P50**
30	50	100	**45**	12	50	**55**	6	50	48…65	910	**GV3P65**
37	50	60	**45**	12	50	**55**	6	50	62...73	1120	**GV3P73**
45	50	60	**45**	12	50	**55**	6	50	70...80	1120	**GV3P80 (4)**

Connection by EverLink® BTR screw connectors, for assembly with a contactor

To assemble a **GV3P13** to **P73** circuit breaker with an **LC1D40A** to **D73A** contactor, it is possible to use the circuit breaker supplied without downstream EverLink® power terminal block. To order this product, add the digit **1** to the end of the references selected above. Example: **GV3P73** becomes **GV3P731**. Do not use direct mounting between **GV3P80** and **LC1D80A** because of potential overheating, use cable link.

Connection by lugs

To order thermal magnetic circuit breakers with connection by lugs, add the digit **6** to the end of reference selected above. Example: **GV3P18** becomes **GV3P186**.

Motor circuit breakers up to 40 HP / 460 V, UL 60947-4-1 type E

GV3P13 (5) to GV3P65 (5)

To obtain a motor-circuit breaker **GV3P**, UL 60947-4-1 type E, use the following with the circuit breaker:
- a "Large Spacing" cover **GV3G66**,
- a short-circuit signalling contact **GVAM11**.

Motor circuit breakers from 7.5 to 50 HP / 460 V, with screw clamp terminals

GV3P with rotary handle

Thermal setting (A)	Maximum Horsepower ratings (6)						Reference
	Single-Phase		Three-Phase				
	115 V	230 V	200 V	230 V	460 V	575 V	
9…13	1/2	1.5	3	3	7.5	10	**GV3P13**
12…18	3/4	2	3	5	7.5	10	**GV3P18**
17…25	1.5	3	5	7.5	15	20	**GV3P25**
23…32	2	3	7.5	7.5	20	25	**GV3P32**
30…40	3	5	10	10	25	30	**GV3P40**
37…50	3	7.5	10	10	30	40	**GV3P50**
48…65	3	10	15	15	40	50	**GV3P65**
62…73	5	15	20	25	50	60	**GV3P73**

GV3P13 to GV3P65 - with connection by lugs (5)

To obtain a motor-circuit breaker **GV3P**, UL 60947-4-1 type E, with connection by lugs, add the digit **6** to the end of reference selected above and use the following with the circuit breaker:
- two IP 20 covers **LAD96570**,
- a short-circuit signalling contact **GVAM11**.

(1) As % of Icu.
(2) The thermal trip setting must be within the range marked on the graduated knob.
(3) BTR screws: hexagon socket head. Require use of an insulated Allen key, in compliance with local wiring regulations.
(4) 750 A Lock Rotor Current max.
(5) Accessories: see page B6/30.
(6) 3P FLA corresponding values : see page A6/58.

DB126635.eps

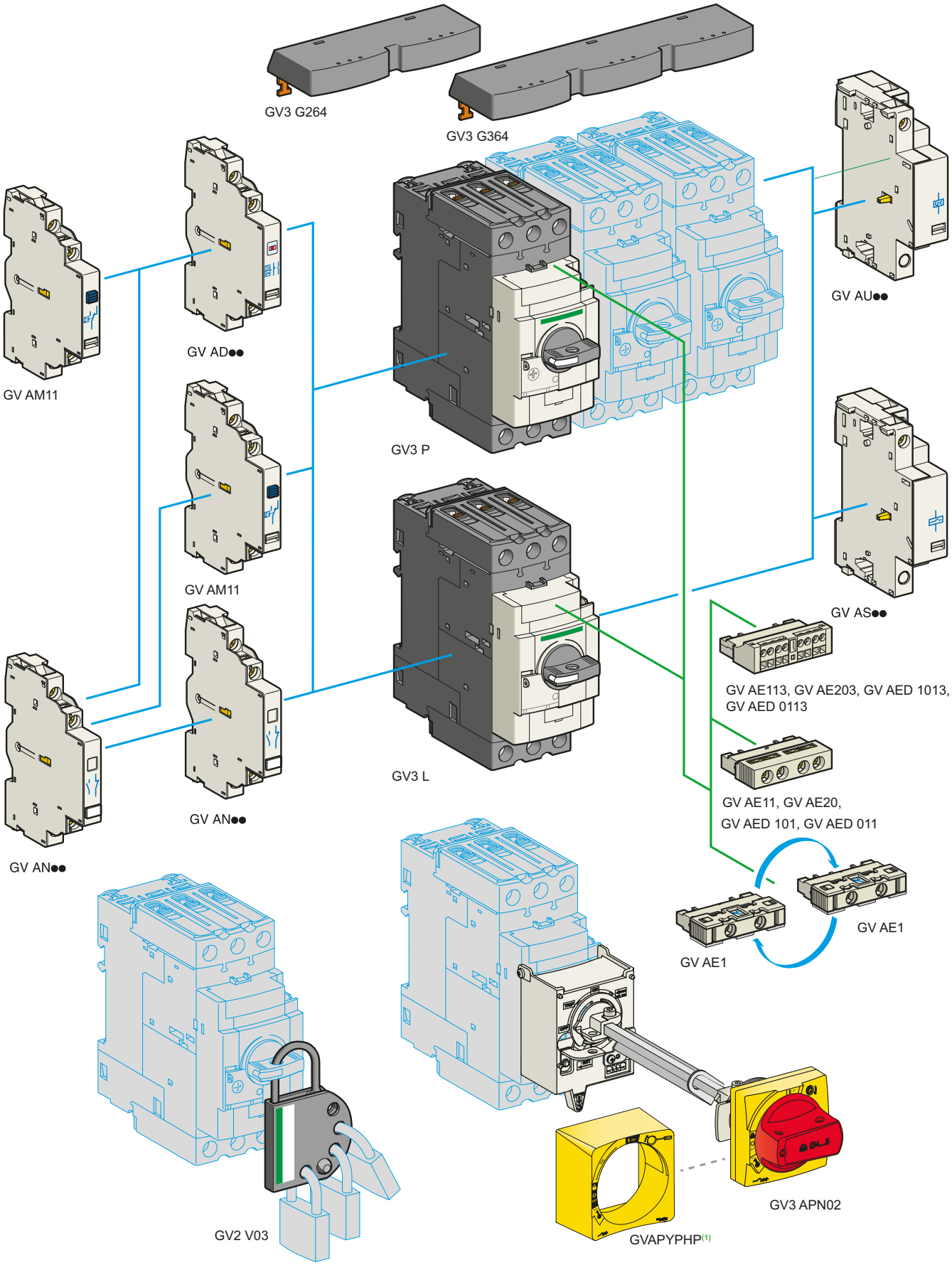

(1) Standard front plate must be removed from the assembly and replaced by Protective front plate (GVAPYPHP).

Life Is On Schneider Electric

Product references

Contact blocks

Description	Mounting	Maximum number	Type of contacts		Sold in lots of	Unit reference
Instantaneous auxiliary contacts	Front	1	N/O or N/C (1)		10	**GVAE1**
			N/O + N/C		10	**GVAE11** (2)
			N/O + N/O		10	**GVAE20** (2)
	Side (LH)	2	N/O + N/C		1	**GVAN11** (2)
			N/O + N/O		1	**GVAN20** (2)
Fault signalling contact + instantaneous auxiliary contact	Front	1	N/O (fault)	+ N/O	1	**GVAED101** (2)
			N/O (fault)	+ N/C	1	**GVAED011** (2)
	Side (3) (LH)	1	N/O (fault)	+ N/O	1	**GVAD1010**
				+ N/C	1	**GVAD1001**
			N/C (fault)	+ N/O	1	**GVAD0110**
				+ N/C	1	**GVAD0101**
Short-circuit signalling contact	Side (LH)	1	C/O common point		1	**GVAM11**

Electric trips - undervoltage or shunt (4)

Mounting	Voltage		Reference
Side (1 block on RH side of circuit breaker)	24 V	50 Hz	**GVA●025**
		60 Hz	**GVA●026**
	48 V	50 Hz	**GVA●055**
		60 Hz	**GVA●056**
	100	50 Hz	**GVA●107**
	100…110 V	60 Hz	**GVA●107**
	110…115 V	50 Hz	**GVA●115**
		60 Hz	**GVA●116**
	120…127 V	50 Hz	**GVA●125**
	127 V	60 Hz	**GVA●115**
	200 V	50 Hz	**GVA●207**
	200…220 V	60 Hz	**GVA●207**
	220…240 V	50 Hz	**GVA●225**
		60 Hz	**GVA●226**
	380…400 V	50 Hz	**GVA●385**
		60 Hz	**GVA●386**
	415…440 V	50 Hz	**GVA●415**
	415 V	60 Hz	**GVA●416**
	440 V	60 Hz	**GVA●385**
	480 V	60 Hz	**GVA●415**
	500 V	50 Hz	**GVA●505**
	600 V	60 Hz	**GVA●505**

Accessories

Description			Reference
Set of 3-pole busbars **Ie = 115 A** Pitch: 64 mm	2 tap-off	GV3P●● and GV3L●●	**GV3G264**
	3 tap-off	GV3P●● and GV3L●●	**GV3G364**
Cover "Large Spacing" UL 60947-4-1 type E (Only one cover required on supply side)		GV3P●●	**GV3G66**

PB108356.eps



GV3G66

(1) Choice of N/C or N/O contact operation, depending on which way round the reversible block is mounted.
*(2) Contact blocks available in version with spring terminal connections. Add a figure **3** at the end of the references selected above. Example: **GVAED101** becomes **GVAED1013**.*
*(3) The **GVAD●●** is always mounted next to the circuit breaker.*
*(4) To order an undervoltage trip: replace the dot (●) in the reference with a **U**, example: **GVAU025**. To order a shunt trip: replace the dot (●) in the reference with an **S**, example: **GVAS025**.*

PB121324.eps



LV426992



LV426990

Limited torque throwaway bits

Torque limiting breakaway bits

Description	Sold in lots of	Reference
5 N.m Yellow	6	**LV426992**
9 N.m Green	6	**LV426990**

Characteristics: pages B6/104 to B6/106
Schemes: page B6/109

Product references

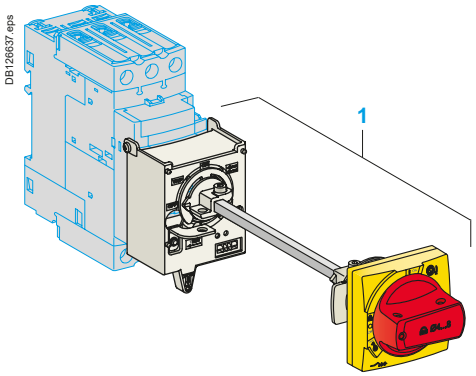

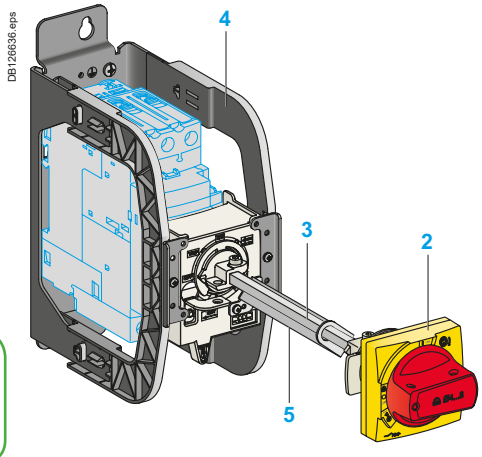

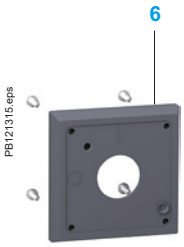

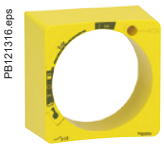

GVAPYPHP



Extended Rotary Handle

Allows a circuit breaker or a starter-controller installed in back of an enclosure to be operated from the front of the enclosure.
A rotary handle can be black or red/yellow, IP54 or IP65. It includes a function for locking the circuit breaker or the starter in the O (Off) or I (On) position (depending of the type of rotary handle) by means of up to 3 padlocks with a shank diameter of 4 to 8 mm. The extended shaft must be adjusted to use in different size enclosures. The IP54 rotary handle is fixed with a nut (Ø22) to make easier the assembling. The new Laser Square tool brings the accurency to align the circuit breaker and the rotary handle.

Padlockable external operators for GV3 and GV3L

Description

1 Kit handle + mounting system
2 Universal handle
3 Shaft
4 Bracket
5 Shaft support plate for deep enclosure
6 Retrofit accessory
7 Laser Square accessory

Kit handle + mounting system

Description		Item	Reference
For GV3P/L	Black handle, front plate, with trip status, IP 54	1	**GV3APN01**
	Red handle, front plate, with trip status, IP 54	1	**GV3APN02**
	Black handle, front plate, without trip status, IP65	1	**GV3APN03**
	Red handle, front plate, without trip status, IP 65	1	**GV3APN04**

Universal handle

For GV3P/L	Black handle, with trip status, IP54	2	**GVAPB54**
	Red handle, with trip status, IP54	2	**GVAPR54**
	Black handle, without trip status, IP65	2	**GVAPB65**
	Red handle, without trip status IP65	2	**GVAPR65**

External handle protection frame

For GV2P/L	Yellow frame	1	**GVAPYPHP**
	Black frame	1	**GVAPBPHP**

Shaft

For GV3P/L	L = 315 mm	3	**GVAPA1**

Bracket

For GV3P/L		4	**GVAPH03**

Shaft support plate for deep enclosure

For GV3P/L	Depth ≥ 300 mm	5	**GVAPK12**

Retrofit accessory

For GV3P/L		6	**GVAPP1**

Laser Square accessory

For GV3P/L		7	**GVAPL01**

Sticker		Sold in lots of		
Warning label	For French	10	-	**GVAPSFR**
	For English	10	-	**GVAPSEN**
	For German	10	-	**GVAPSDE**
	For Spanish	10	-	**GVAPSES**
	For Chinese	10	-	**GVAPSCN**
	For Portuguese	10	-	**GVAPSPT**
	For Russian	10	-	**GVAPSRU**
	For Italian	10	-	**GVAPSIT**

Dimensions, schemes:
pages B6/108