Current transformers

Schneider Electric is the global specialist in energy management with the most complete power monitoring product line. Current Transformers are essential components designed to be used with Schneider Electric's extensive power monitoring product portfolio. From simple energy meters to world class power quality meters, these proven products satisfy any requirement.

PB119870 PB119864 PB100316-35 056852NMD-2 056854NMD-2

METSECT5CC04

METSECT5MB025

METSECT5CYL1

METSECT5GD025

METSECT5HA025

Ip/5 A ratio

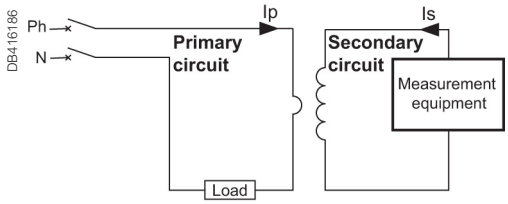

Application diagram of a CT.

The Ip/5 A ratio current transformer delivers at the secondary a current (Is) of 0 to 5 A that is proportional to the current measured at the primary (Ip). This allows them to be used in combination with measurement equipment:

- Ammeters.
- Kilowatt-hour meters.
- Measurement units.
- Control relays.
- etc.

When the primary is energized, the measurement equipment nearly acts as a short circuit which keeps the secondary voltage very low. This voltage will increases significantly if the short circuit is removed.

CT selection - conductor rating aspects

The choice depends on the conductor profile and the maximum intensity of the primary circuit.

CT with let-through primary

Conductor type	Cable	Mixed, bars or cables	Vertical or horizontal bars	Vertical bars
Suggested Current Transformer and mounting	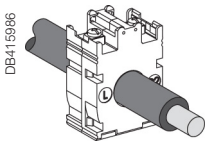 DB415986	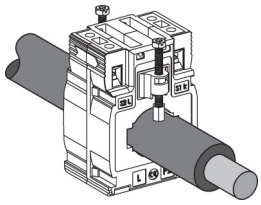 DB415920 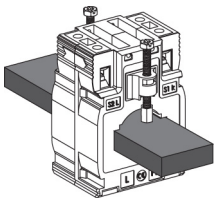 DB415921	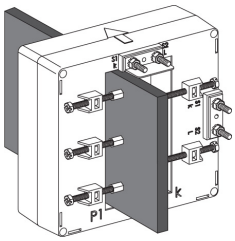 DB415988 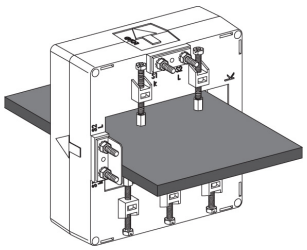 DB415987	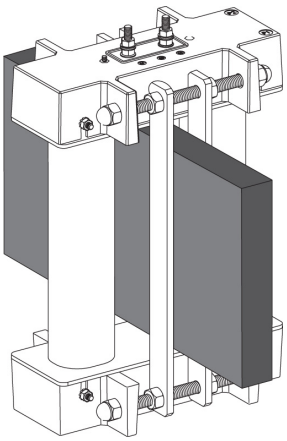 DB415989
Ratings (A)	40 to 250	150 to 800	200 to 4000	5000 to 6000
CT internal	**Type C**	**Type M**	**Type D** (1)	**Type V**
	FF C	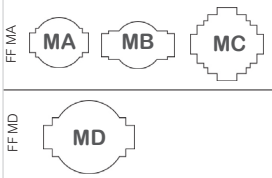 FF MA MA MB MC FF MD MD	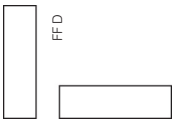 FF D	FF V2 VV

***(1)** Two secondary connectors (parallel internal wiring - only one secondary winding) for easier cable access. 1 lateral + 1 on one extremity. Warning: only one must be used at a time.*

Specific mounting: use of cylinder

A cylindrical metallic spacer ensures a proper CT positioning when the conductor or the CT cannot be positioned perpendicular. Secured by bolt + nut.

CT with primary connection by screw and nut
(example: use of cylinder with bar or cable)

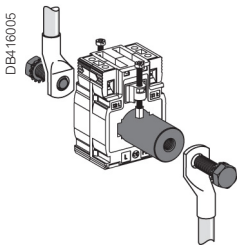

METSECT5CYL1 (aluminium)

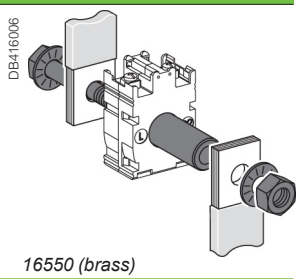

16550 (brass)

NOTE: This document is not intended to be used as an installation guide.

CT selection - Electrical aspect Ip/5 A

- We recommend that you choose the ratio immediately higher than the maximum measured current (In).
  Example: In = 1103 A; ratio chosen = 1250/5.
- For small ratings: From 40/5 to 75/5 and for an application with digital devices, we recommend that you choose a higher rating, for example 100/5. This is because small ratings are less accurate and the 40 A measurement, for example, will be more accurate with a 100/5 CT than with a 40/5 CT.
- Specific case of the motor starter: to measure motor starter current, you must choose a CT with primary current Ip = Id/2 (Id = motor starting current).

Validation of measurement solution according to accuracy class

It consists in controlling the right adaptation of the CT on the accuracy class aspect. The accuracy class is specified in the project. The total dissipated power of the measurement circuit (meter + cables) should not be superior to the specified limit of the CT. This limit is for different standard classes. If necessary, the choice of the cable section, the CT or meter should be modified to fit the requirement.

Copper cable cross-section (mm²)	Power per doubled meter at 20 °C (VA)
1	**1**
1.5	**0.685**
2.5	**0.41**
4	**0.254**
6	**0.169**
10	**0.0975**
16	**0.062**

Schneider Electric device	Consumption of the current input (VA)
Ammeter 72 x 72 / 96 x 96	**1.1**
Analog ammeter	**1.1**
Digital ammeter	**0.3**
PM8000	**0.15**
PM3000	**0.3**
PM5000	
iEM3000	

For each temperature variation per 10 °C bracket, the power drawn up by the cables increases by 4 %.

Application example

Project specification: **200 A**, in **Ø27** mm cable, accuracy class 1.
Our choice is **METSECT5MA020**.

For this CT selected on the chart (next page), the max acceptable power is **7 VA** (for "Accuracy class 1" which is specified in the project).

FF ME

Internal profile type	Cables (mm)	Bars (mm)	Rating Ip/5 A (A)	Commercial reference number	Accuracy class 0.5	1	3
					Max. power (VA)		
MA							
	Ø27	10 x 32	150	METSECT5MA015	3	4	-
		15 x 25	200	METSECT5MA020	4	7	-
			250	METSECT5MA025	6	8	-
			300	METSECT5MA030	8	10	-
			400	METSECT5MA040	10	12	-

Control of the conformity of the measurement chain:
- PM3000 multi-meter: 0.3 VA.
- 4 meters of 2.5 mm², doubled wires: 0.41 x 4 = 1.64 VA.

***Total:** 0.3 + 1.64 = 1.94 VA (< 7 VA)*

***Conclusion:** this CT is well adapted as the accuracy class will be even better than 1.*

Hazard Label

⚠ DANGER

HAZARD OF ELECTRIC SHOCK, EXPLOSION, OR ARC FLASH
- Apply appropriate personal protective equipment (PPE) and follow safe elecrical work practices. See NFPA 70E in the USA, CSA Z462 or applicable local standards.
- Turn off all power supplying this device and the quipment in which it is installed before working on the device or equipment.
- Always use a properly rated voltage sensing device to confirm that all power is off.
- Treat I/O wiring connected to multiple devices as hazardous live until determined otherwise.
- Do not exceed the device's ratings for maximum limits.
- Do not use this device for critical control or protection applications where human or equipment safety relies on the operation of the control circuit.
- Disconnect all the device's input and output wires before performing dielectric (hi-pot) or Megger testing.

CT DAMAGE
- Never open circuit a current transformer (CT)
- Do not open the CT case.
- Do not attempt to repair any components of the CT.

Failure to follow these instructions will result in death or serious injury.

PB118085

Presentation of commercial reference numbers

MET SE CT X XX XXX

- X: 1 = 1 Amp; 5 = 5 Amp; R = Rogowski
- XX: 2 letters = Form Factor
- XXX: Last 3 digits = primary rating/10

Examples:

METSECT5CC008 = 5 A secondary, Cables only, 75 A primary
METSECT5MC080 = 5 A secondary, mixed for cables and bars, 800 A primary
METSECTR30500 = Rogowski CT, 300 mm length, 96 mm diameter 50 A to 5000 A

PB112446

METSECT5CC●●●

PB112461

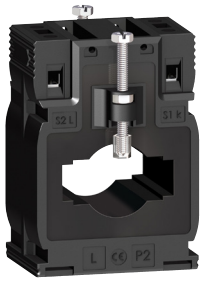

METSECT5MB●●●

PB112460

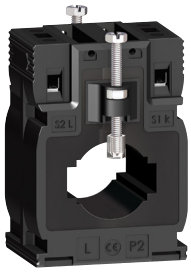

METSECT5MA●●●

PB112462

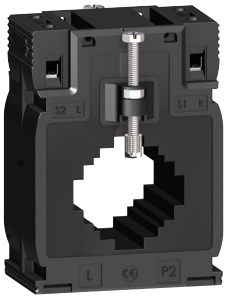

METSECT5MC●●●

PB112463

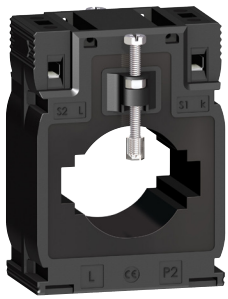

METSECT5MD●●●

Type C - solid core current transformer (cable profile)

Internal profile type	Cables (mm)	Bars (mm)	Rating Ip/5 A (A)	Commercial ref number
CC				
FF CC	**Ø21**	-	40	**METSECT5CC004**
			50	**METSECT5CC005**
			60	**METSECT5CC006**
			75	**METSECT5CC008**
			100	**METSECT5CC010**
			125	**METSECT5CC013**
			150	**METSECT5CC015**
			200	**METSECT5CC020**
			250	**METSECT5CC025**

Type M - current transformers (mixed: cable/bar profile)

MB				
FF MB 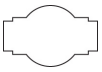	**Ø26**	**12 x 40** **15 x 32**	250	**METSECT5MB025**
			300	**METSECT5MB030**
			400	**METSECT5MB040**
MA				
FF MA	**Ø27**	**10 x 32** **15 x 25**	150	**METSECT5MA015**
			200	**METSECT5MA020**
			250	**METSECT5MA025**
			300	**METSECT5MA030**
			400	**METSECT5MA040**
MC				
FF MC 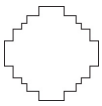	**Ø32**	**10 x 40** **20 x 32** **25 x 25**	250	**METSECT5MC025**
			300	**METSECT5MC030**
			400	**METSECT5MC040**
			500	**METSECT5MC050**
			600	**METSECT5MC060**
			800	**METSECT5MC080**
MD				
FF MD 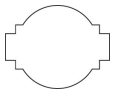	**Ø40**	**12 x 50** **20 x 40**	500	**METSECT5MD050**
			600	**METSECT5MD060**
			800	**METSECT5MD080**

See your Schneider Electric representative for complete ordering information.

DB415926

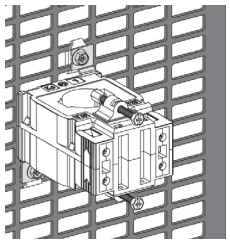

Mounting plate installation.

DB415927

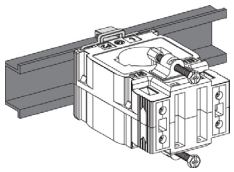

DIN rail mounting.

Common characteristics

Secondary current Is (A)	5 A
Maximum voltage rating Ue (V)	720 V
Frequency (Hz)	50/60 Hz
Safety factor (sf)	40 to 4000 A: sf ≤ 5 5000 to 6000 A: sf ≤ 10
Degree of protection	IP20
Operating temperature	tropicalised range -25°C to +60°C (1) relative humidity > 95 %
Storage temperature	-40°C to +85°C
Compliance with standards	IEC 61869-2 VDE 0414
Secondary connection (as per model)	by terminals for lug by tunnel terminals by screws

(1) Warning: *some products are limited to +50°C.*

Type C - solid core current transformer (cable profile)

Internal profile type	Accuracy class 0.5	1	3	Overall dimensions (refer to drawing pages for details) W x H x D (mm)	Fastening mode	Accessories: Cylinder	
	Max. power (VA)						
CC				**Dimension (mm)**		**Commercial ref no.**	
FF CC	-	-	1	**44 x 66 x 37**	■ Adapter for DIN rails. ■ Mounting plate.	**16550** **METSECT5CYL1**	**Included**
	-	1.25	1.5				
	-	1.25	2				
	-	1.5	2.5				
	2	2.5	3.5				
	2.5	3.5	4				
	3	4	5				
	4	5.5	6				
	5	6	7				
MB							
FF MB 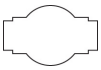	3	5	-	**60 x 85 x 63**	■ Adapter for DIN rails. ■ Mounting plate.	-	**METSECT5COVER**
	4	6	-				
	6	8	-				
MA							
FF MA	3	4	-	**56 x 80 x 63**	■ Adapter for DIN rails. ■ Mounting plate.	**METSECT5CYL2**	**METSECT5COVER**
	4	7	-				
	6	8	-				
	8	10	-				
	10	12	-				
MC							
FF MC 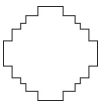	3	5	-	**70 x 95 x 65**	■ Adapter for DIN rails. ■ Mounting plate.	-	**METSECT5COVER**
	5	8	-				
	8	10	-				
	10	12	-				
	12	15	-				
	10	12	-				
MD							
FF MD 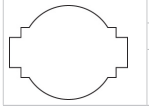	4	6	-	**70 x 95 x 65**	■ Adapter for DIN rails. ■ Mounting plate.	-	**METSECT5COVER**
	6	8	-				
	8	12	-				

PB112451 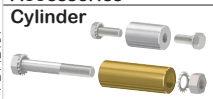 PB112452

See your Schneider Electric representative for complete ordering information.

NOTE: This document is not intended to be used as an installation guide.

PB112467

METSECT5VV●●●

Type V - current transformers (vertical bar profile)

Internal profile type	Cables (mm)	Bars (mm)	Rating Ip/5 A (A)	Commercial reference number
VV				
FF V2	-	**55 x 165**	5000	**METSECT5VV500** ★
			6000	**METSECT5VV600** ★

PB112455

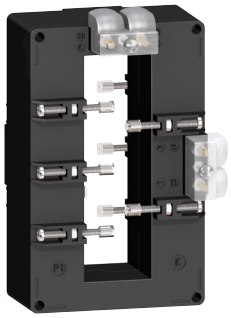

METSECT5DB●●●

PB112454

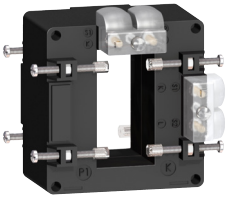

METSECT5DA●●●

PB112456

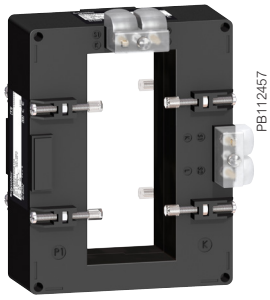

METSECT5DC●●●

PB112457

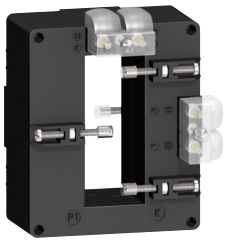

METSECT5DD●●●

PB112458

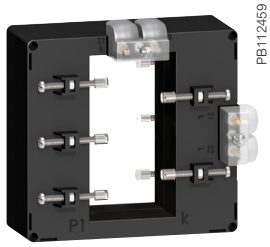

METSECT5DE●●●

PB112459

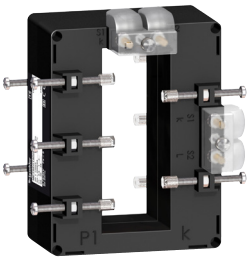

METSECT5DH●●●

Type D - current transformers (vertical or horizontal bar - dual secondary terminals)

DA				
		32 x 65	400	**METSECT5DA040**
			500	**METSECT5DA050**
			600	**METSECT5DA060**
			800	**METSECT5DA080**
			1000	**METSECT5DA100**
			1250	**METSECT5DA125** ★
			1500	**METSECT5DA150** ★
DB				
	-	**38 x 127**	1000	**METSECT5DB100**
			1250	**METSECT5DB125** ★
			1500	**METSECT5DB150** ★
			2000	**METSECT5DB200** ★
			2500	**METSECT5DB250** ★
			3000	**METSECT5DB300** ★
DC				
	-	**52 x 127**	2000	**METSECT5DC200** ★
			2500	**METSECT5DC250** ★
			3000	**METSECT5DC300** ★
			4000	**METSECT5DC400** ★
DD				
	-	**34 x 84**	1000	**METSECT5DD100**
			1250	**METSECT5DD125** ★
			1500	**METSECT5DD150** ★
DE				
	-	**54 x 102**	1000	**METSECT5DE100**
			1250	**METSECT5DE125** ★
			1500	**METSECT5DE150** ★
			2000	**METSECT5DE200** ★
DH				
	-	**38 x 102**	1250	**METSECT5DH125** ★
			1500	**METSECT5DH150** ★
			2000	**METSECT5DH200** ★

★ *Operating temperature: -25 °C to 50 °C*

See your Schneider Electric representative for complete ordering information.

Type V - solid core current transformers (vertical bar profile)

Internal profile type	Accuracy class			Overall dimensions (refer to drawing pages for details) W x H x D (mm)	Fastening mode	Accessories	
	0.5	1	3			Cylinder	Sealable cover
	Max. power (VA)						
VV				**Dimension (mm)**	.		
FF V2	60	-	-	**175 x 273.5 x 110**	■ Insulated locking screw.	-	**Included**
	70	-	-				

Type D - solid core current transformers (vertical or horizontal bar - dual secondary terminals)

DA				**Dimension (mm)**			
	4	8	-	**90 x 94 x 90**	■ Insulated locking screw.		**Included**
	8	10	-				
	8	12	-				
	12	15	-				
	15	20	-				
	15	20	-				
	20	25	-				
DB							
	6	10	-	**99 x 160 x 87**	■ Insulated locking screw.	-	**Included**
	8	12	-				
	10	15	-				
	15	20	-				
	20	25	-				
	25	30	-				
DC							
	25	30	-	**125 x 160 x 87**	■ Insulated locking screw.	-	**Included**
	30	50	-				
	30	50	-				
	30	50	-				
DD							
	10	15	-	**96 x 116 x 87**	■ Insulated locking screw.	-	**Included**
	12	15	-				
	15	20	-				
DE							
	12	15	-	**135 x 129 x 85**	■ Insulated locking screw.	-	**Included**
	15	20	-				
	20	25	-				
	20	25	-				
DH							
	12	15	-	**98 x 129 x 75**	■ Insulated locking screw.	-	**Included**
	12	15	-				
	20	25	-				

★ *Operating temperature: -25 °C to 50 °C*

See your Schneider Electric representative for complete ordering information.

Solid core CT dimensions

CC internal profile type

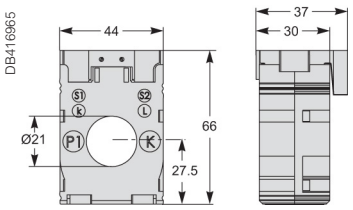

MB internal profile type

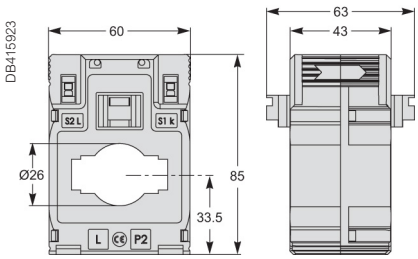

MA internal profile type

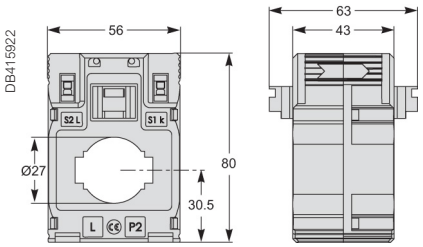

MC internal profile type

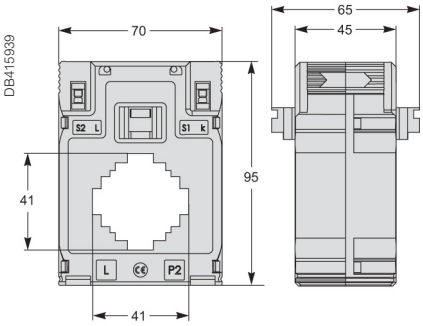

MD internal profile type

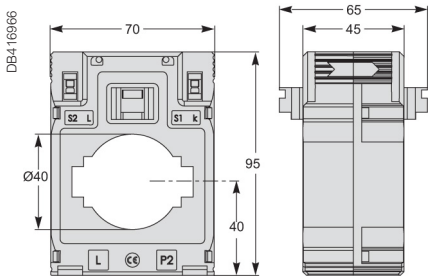

DA internal profile type

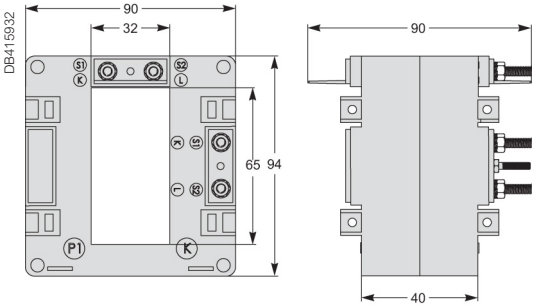

DB internal profile type

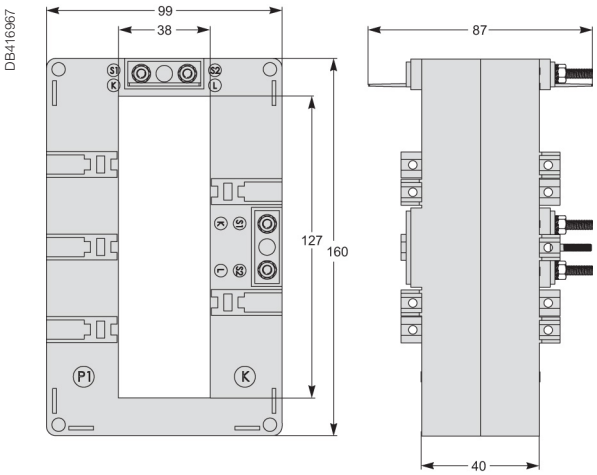

DC internal profile type

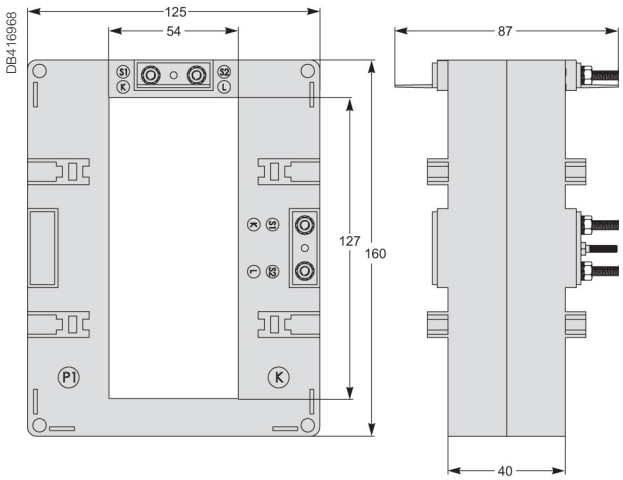

Solid core CT dimensions contd.

DD internal profile type

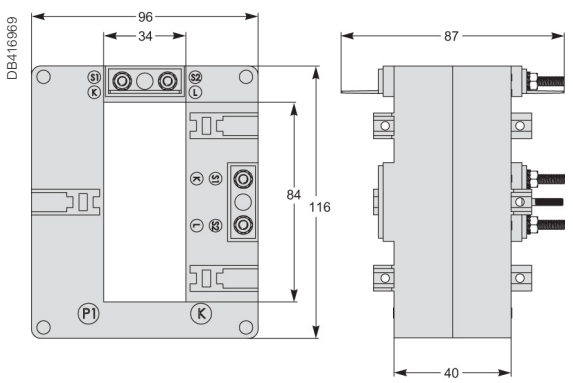

DE internal profile type

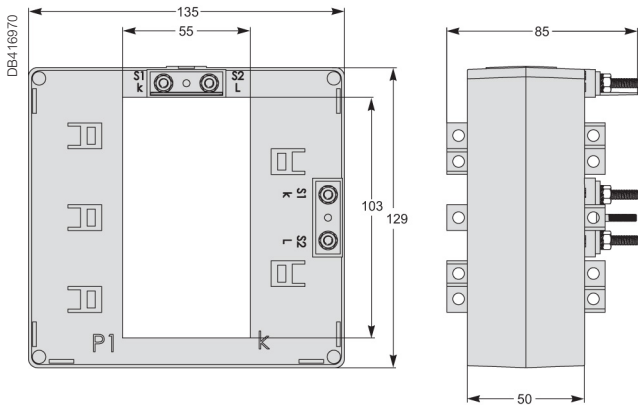

DH internal profile type

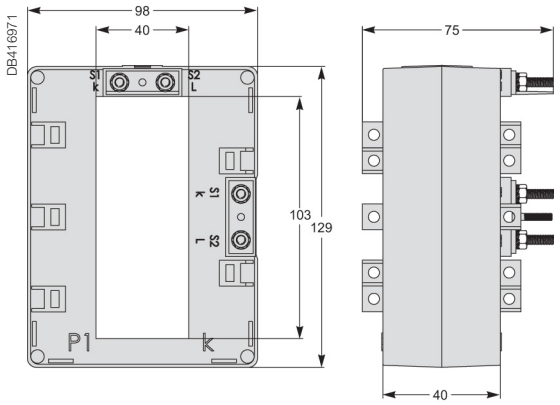

VV internal profile type

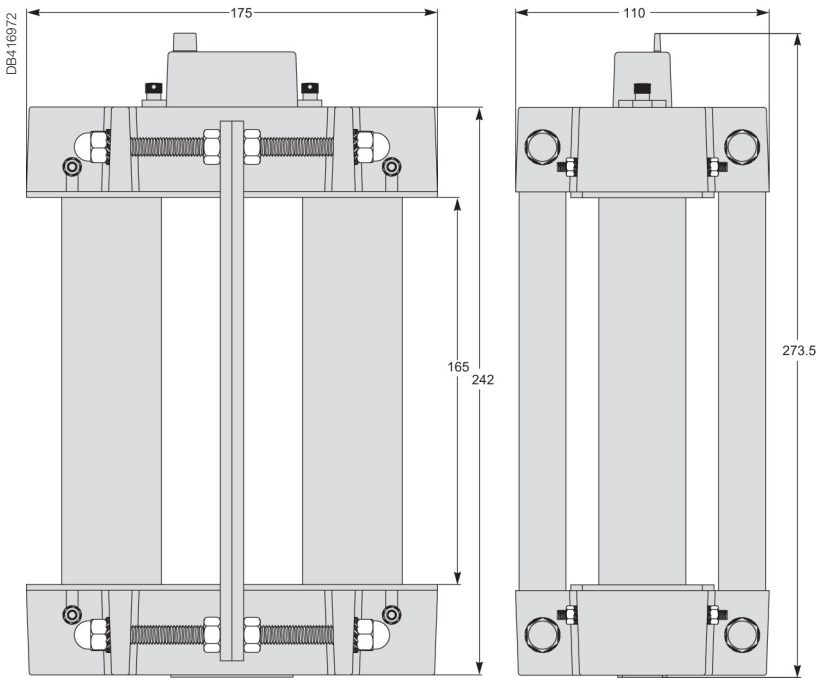

NOTE: This document is not intended to be used as an installation guide.

Solid core cylinders dimensions

Cylinders

METSECT5CYL1

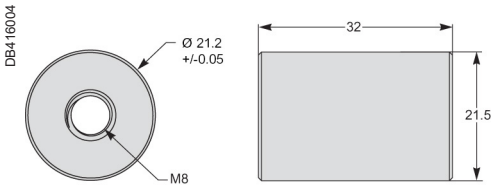

Aluminium

METSECT5CYL2

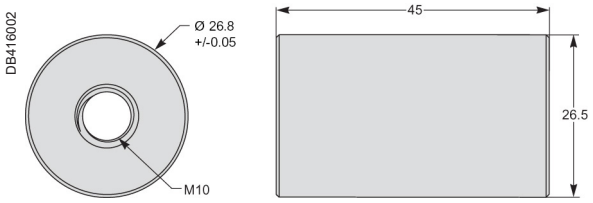

Aluminium

16550

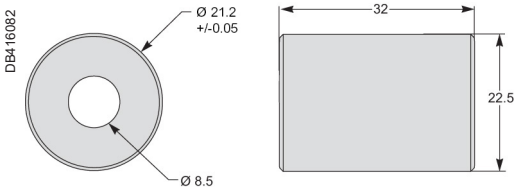

Brass

16551

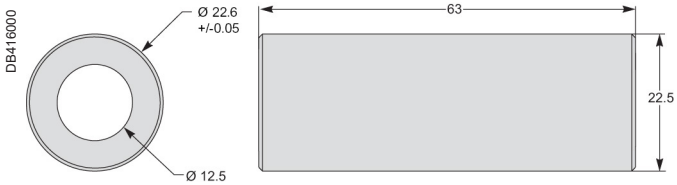

Brass

Covers

METSECT5COVER

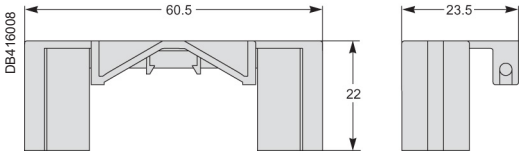

Split core CTs

Hazard Label

⚠ DANGER

HAZARD OF ELECTRIC SHOCK, EXPLOSION, OR ARC FLASH

- Apply appropriate personal protective equipment (PPE) and follow safe elecrical work practices. See NFPA 70E in the USA, CSA Z462 or applicable local standards.
- Turn off all power supplying this device and the quipment in which it is installed before working on the device or equipment.
- Always use a properly rated voltage sensing device to confirm that all power is off.
- Treat I/O wiring connected to multiple devices as hazardous live until determined otherwise.
- Do not exceed the device's ratings for maximum limits.
- Do not use this device for critical control or protection applications where human or equipment safety relies on the operation of the control circuit.
- Disconnect all the device's input and output wires before performing dielectric (hi-pot) or Megger testing.

CT DAMAGE

- Never open circuit a current transformer (CT)
- Do not open the CT case.
- Do not attempt to repair any components of the CT.

Failure to follow these instructions will result in death or serious injury.

Common characteristics	Cable CT	Bus Bar CT
Secondary current Is (A)	5 A	5 A
Maximum voltage rating Ue (V)	720 V	720 V
Frequency (Hz)	50/60 Hz	50/60 Hz
Safety factor (sf)	up to 1000 A: sf ⩽ 5 greater than 1000 A: sf ⩽ 10	up to 1500 A: sf ⩽ 5 greater than 1500 A: sf ⩽ 10
Degree of protection	IP20	IP20
Operating temperature	-5°C to +50°C relative humidity 5-85 %	-5°C to +40°C relative humidity 5-85 %
Storage temperature	-25°C to +70°C	-25°C to +70°C
Compliance with standards	IEC 61869-1 IEC 61869-2	IEC 61869-1 IEC 61869-2
Secondary connection (as per model)	by terminals for lug by tunnel terminals by screws	by terminals for lug by tunnel terminals by screws

Split core CT

CT internal	Type H	Type G
	FF C **HA HD HG HJ HP**	FF V2 **GA GD GG GJ**
	FF HM **HM**	

Split core CTs

PB119862

METSECT5GA●●●

PB119864

METSECT5GD●●●

PB119866

METSECT5GG●●●

PB119868

METSECT5GJ●●●

Type G - split core current transformers (bus bar)

	Accuracy class Max power (VA)			CT window dimension (mm)	Rating Ip/5A (A)	Commercial Reference no.
	0.5	1	3			
GA						
	-	-	1.25	23 x 33	100	METSECT5GA010
	-	-	1.5		150	METSECT5GA015
	-	-	2.5		200	METSECT5GA020
	-	1.5	-		250	METSECT5GA025
	-	3.75	-		300	METSECT5GA030
	1	-	-		400	METSECT5GA040
GD						
	-	1.5	-	55 x 85	250	METSECT5GD025
	-	2.5	-		300	METSECT5GD030
	1	-	-		400	METSECT5GD040
	2.5	-	-		500	METSECT5GD050
	2.5	-	-		600	METSECT5GD060
	2.5	-	-		750	METSECT5GD075
	2.5	-	-		800	METSECT5GD080
	5	-	-		1000	METSECT5GD100
GG						
	-	1.5	-	85 x 125	250	METSECT5GG025
	-	2.5	-		300	METSECT5GG030
	-	2.5	-		400	METSECT5GG040
	2.5	-	-		500	METSECT5GG050
	2.5	-	-		600	METSECT5GG060
	2.5	-	-		750	METSECT5GG075
	2.5	-	-		800	METSECT5GG080
	5	-	-		1000	METSECT5GG100
	5	-	-		1200	METSECT5GG120
	7.5	-	-		1250	METSECT5GG125
	7.5	-	-		1500	METSECT5GG150
GJ						
	10	-	-	85 x 165	1000	METSECT5GJ100
	10	-	-		1200	METSECT5GJ120
	10	-	-		1500	METSECT5GJ150
	10	-	-		1600	METSECT5GJ160
	10	-	-		2000	METSECT5GJ200
	10	-	-		2500	METSECT5GJ250
	15	-	-		3000	METSECT5GJ300
	15	-	-		4000	METSECT5GJ400

See your Schneider Electric representative for complete ordering information.

Split core CTs contd.

PB119870

METSECT5HA●●●

PB119872

METSECT5HD●●●

PB119874

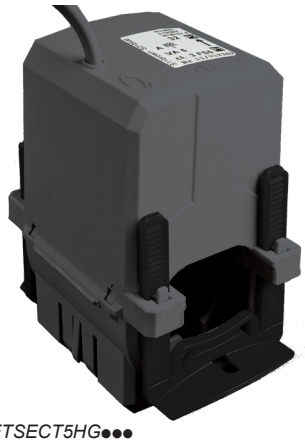

METSECT5HG●●●

PB119876

METSECT5HJ●●●

Type H - split core current transformers (cable)

	Accuracy class Max power (VA)			CT window dimension (mm)	Rating Ip/5A (A)	Commercial Reference no.
	0.5	1	3			
HA						
	-	1	-	18.4 x 19	150	METSECT5HA015
	-	1.5	-		150	METSECT5HA020
	1	-	-		250	METSECT5HA025
HD						
	-	1	-	27.9 x 27	250	METSECT5HD025
	-	1.5	-		300	METSECT5HD030
	-	2.5	-		400	METSECT5HD040
	1	-	-		500	METSECT5HD050
HG						
	-	-	1.5	Ø32.5	100	METSECT5HG010
	-	-	2.5		125	METSECT5HG013
	-	-	3		150	METSECT5HG015
	-	-	3		200	METSECT5HG020
	-	-	3		250	METSECT5HG025
	-	2.5	-		300	METSECT5HG030
	-	5	-		400	METSECT5HG040
	-	5	-		500	METSECT5HG050
	-	5	-		600	METSECT5HG060
HJ						
	-	2.5	-	42.4 x 43	300	METSECT5HJ030
	-	5	-		400	METSECT5HJ040
	-	5	-		500	METSECT5HJ050
	2.5	-	-		600	METSECT5HJ060
	2.5	-	-		750	METSECT5HJ075
	2.5	-	-		800	METSECT5HJ080
HM						
	-	2.5	-	42.4 x 85	300	METSECT5HM030
	-	5	-		400	METSECT5HM040
	-	5	-		500	METSECT5HM050
	2.5	-	-		600	METSECT5HM060
	2.5	-	-		750	METSECT5HM075
	2.5	-	-		800	METSECT5HM080
HP						
	-	1.5	-	Ø44	250	METSECT5HP025
	-	2.5	-		300	METSECT5HP030
	-	5	-		400	METSECT5HP040
	-	5	-		500	METSECT5HP050
	-	5	-		600	METSECT5HP060
	-	5	-		750	METSECT5HP075
	-	5	-		800	METSECT5HP080
	-	5	-		1000	METSECT5HP100

See your Schneider Electric representative for complete ordering information.

PB119878

METSECT5HM●●●

PB119880

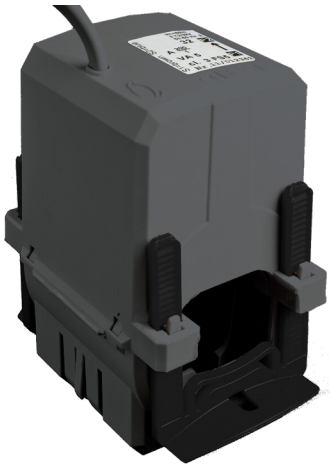

METSECT5HP●●●

Split core CT dimensions

Gx products

GA Dimensions

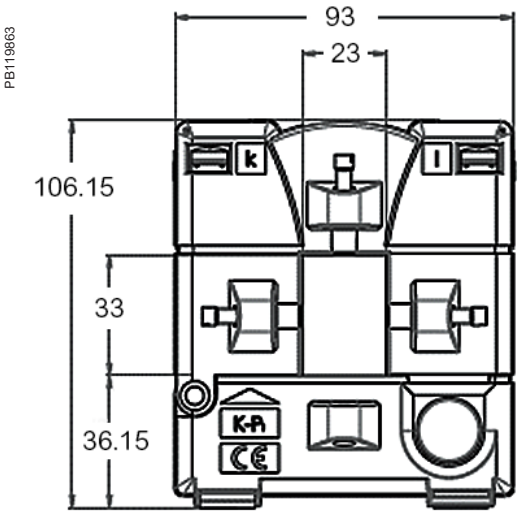

GD Dimensions

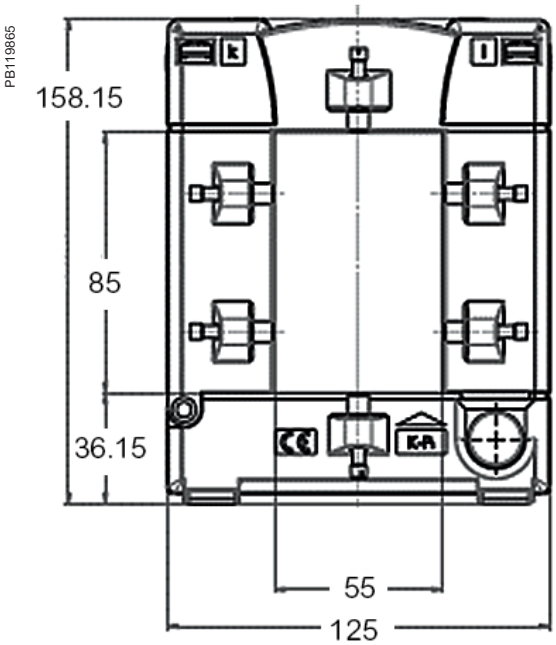

GG Dimensions

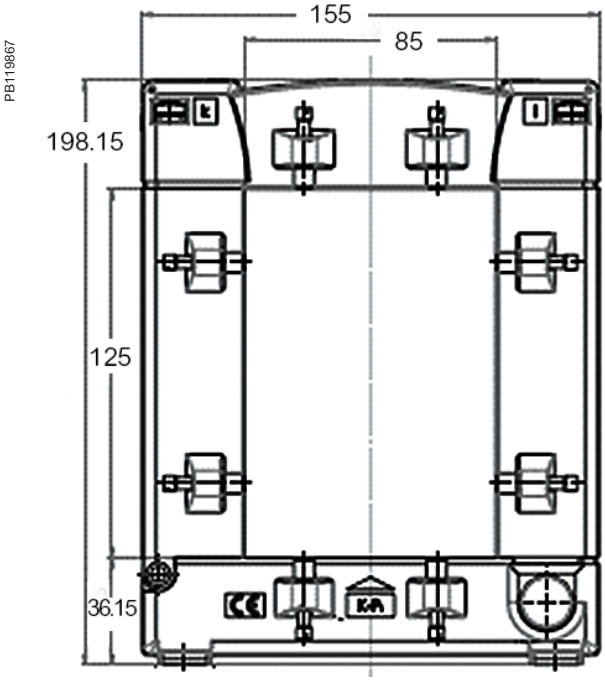

GJ Dimensions

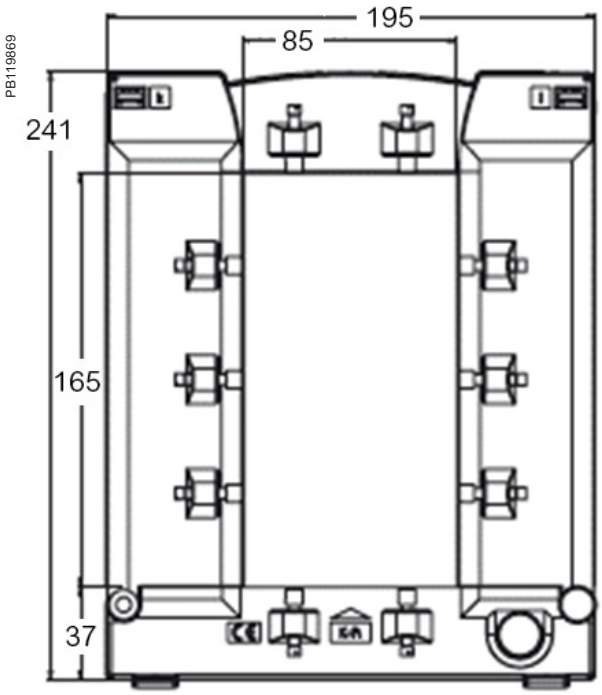

Split core CT dimensions contd.

Hx products

HA Dimensions

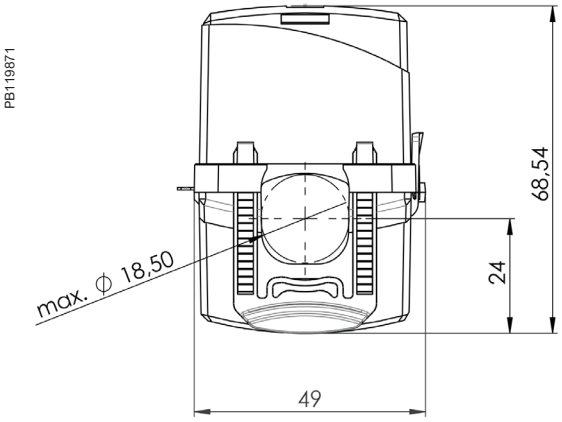

HD Dimensions

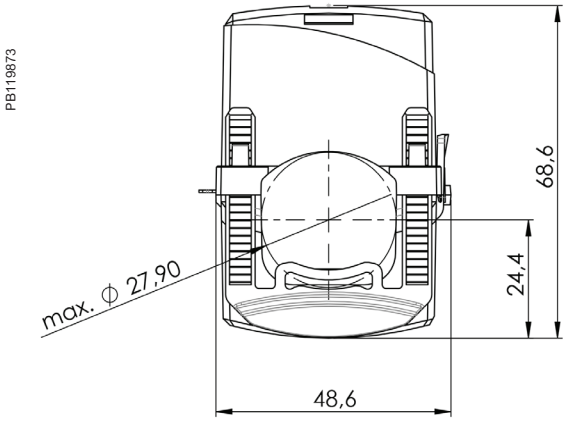

HG Dimensions

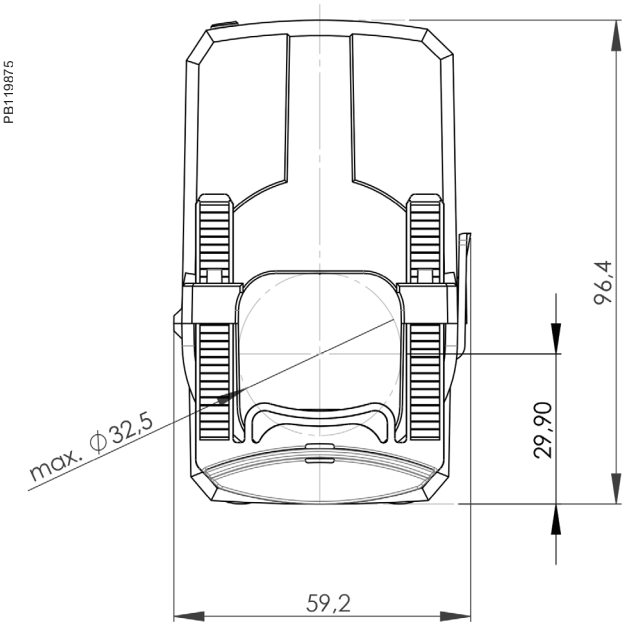

HJ Dimensions

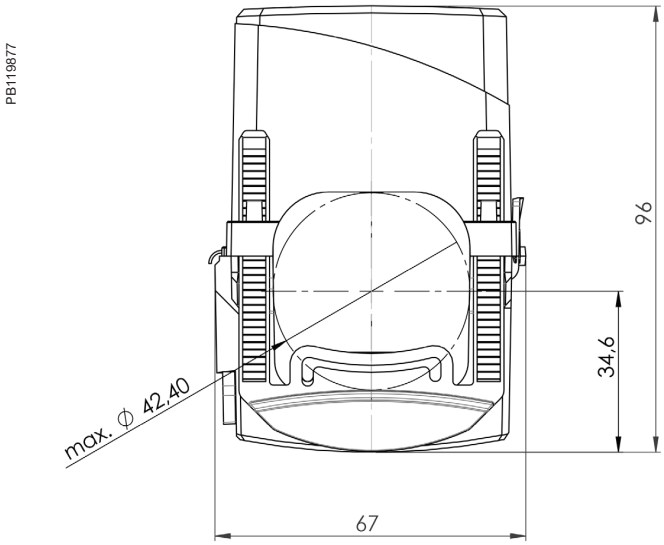

Split core CT dimensions contd.

HM Dimensions

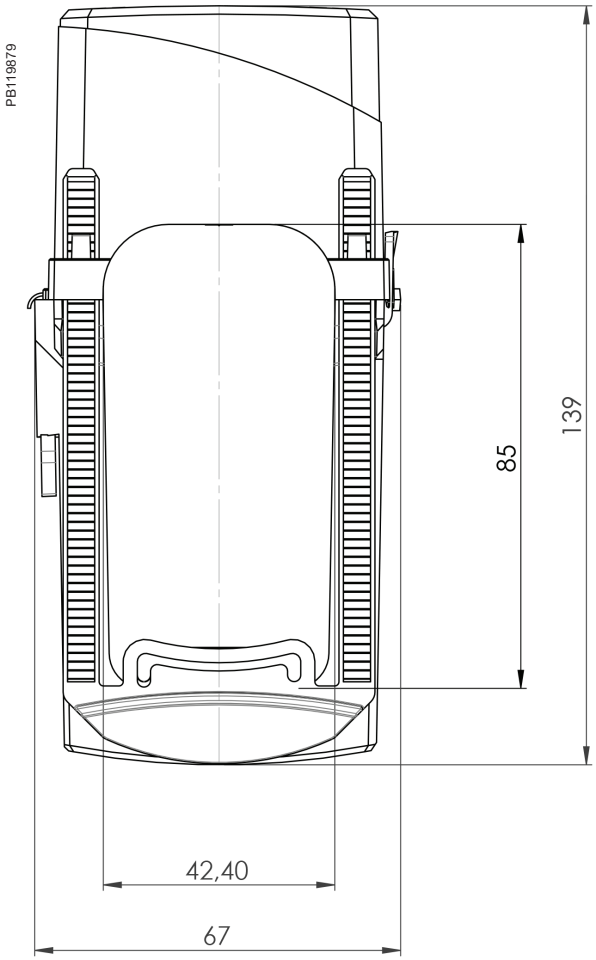
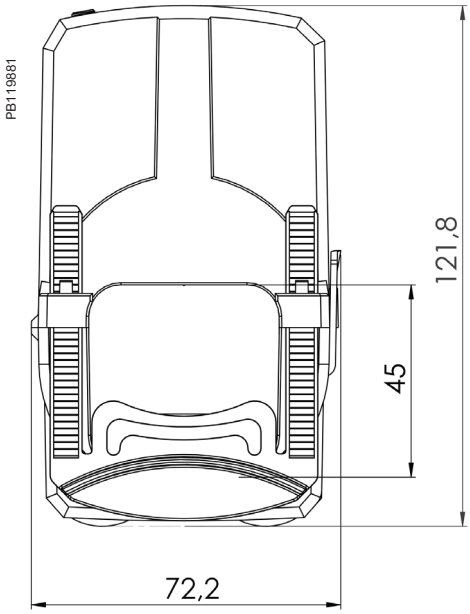
HP Dimensions