ZENITH-P Series

ATEX-IECEx-EAC Ex II 2GD

ENCLOSURES

ACCESSORIES









		H	W	D	ENCLOSURE	EARTH CONTINUITY PLATE	INTERNAL MOUNTING PLATE	TYPE L EARTH-PLATE
CONTROL STATIONS	JUNCTION BOXES	75	80	55	**644.0100**	**644.A0100**	**644.B00**	**644.0100L**
			110	55	**644.0110**	**644.A0110**	**644.B10**	**644.0110L**
			160	55	**644.0120**	**644.A0120**	**644.B20**	**644.0120L**
			190	55	**644.0130**	**644.A0130**	**644.B30**	**644.0130L**
			230	55	**644.0140**	**644.A0140**	**644.B40**	**644.0140L**
			80	75	**644.0200**	**644.A0200**	**644.B00**	**644.0200L**
			110	75	**644.0210**	**644.A0210**	**644.B10**	**644.0210L**
			160	75	**644.0220**	**644.A0220**	**644.B20**	**644.0220L**
			190	75	**644.0230**	**644.A0230**	**644.B30**	**644.0230L**
			230	75	**644.0240**	**644.A0240**	**644.B40**	**644.0240L**
		120	122	90	**644.0345**	**644.A0345**	**644.B45**	**644.0345L**
			220	90	**644.0350**	**644.A0350**	**644.B50**	**644.0350L**
		160	160	90	**644.0360**	**644.A0360**	**644.B60**	**644.0360L**
			260	90	**644.0370**	**644.A0370**	**644.B70**	**644.0370L**
			360	90	**644.0380**	**644.A0380**	**644.B80**	**644.0380L**
			560	90	**644.0390**	**644.A0390**	**644.B90**	**644.0390L**
		250	255	120	**644.0465**	**644.A0465**	**644.B65**	**644.0465L**
			400	120	**644.0485**	**644.A0485**	**644.B85**	**644.0485L**
		405	400	165	**644.0595**	**644.A0595**	**644.B95**	**644.0595L**

DIMENSIONAL REFERENCES

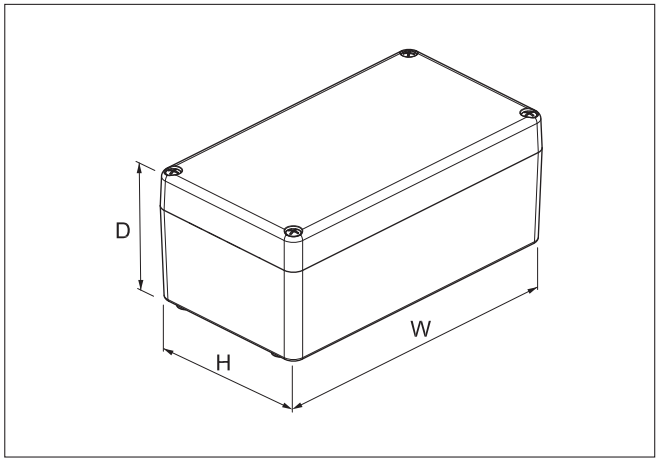






H	W	D	EXTERNAL MOUNTING BRACKETS	EXTERNAL MOUNTING VERTICAL FEET	EARTH STUD	PADLOCK
75	80	55	644.C075	644.D075	644.E650 (BRASS) 644.E651 (STEEL)	644.G001
	110	55				
	160	55				
	190	55				
	230	55				
	80	75				644.G002
	110	75				
	160	75				
	190	75				
	230	75				
120	122	90	644.C120	644.D120		644.G003
	220	90				
160	160	90	644.C160	644.D160		644.G004
	260	90				
	360	90				
	560	90				
250	255	120		644.D250		644.G005
	400	120				
405	400	165		644.D405		644.G006